SIEMENS

Technical Instructions

Document No. CA1N4455E-P25
May 8, 2009

MXG461…U, MXF461…U Series

Modulating Control Valves with Magnetic Actuators

MXG461…U

MXF461…U

Description

Mixing or straight-through valves with magnetic actuators for modulating control of hot and chilled water systems in closed circuits.

Features

- Fast positioning time (< two seconds), high-resolution stroke (1:1000).
- Linear or equal-percentage valve characteristic (user-selected).
- Switch-selectable control signal: 0 to 10 Vdc, 2 to 10 Vdc, or 4 to 20 mA.
- Wear-free inductive stroke measurement.
- Low friction, robust, no maintenance required.
- Fail-safe feature: A → AB closed when de-energized.
- Positioning control.
- Position feedback.
- Manual control.

Product Numbers

See Table 1.

Warning/Caution Notations

WARNING:	⚠	Personal injury or loss of life may occur if you do not follow the procedures as specified.
CAUTION:	⚠	Equipment damage or loss of data may occur if you do not follow the procedures as specified.

Application

The MXG461...U (screwed fitting) and MXF461...U (flange fitting) valves are mixing or straight-through valves with a factory calibrated and mounted magnetic actuator. The magnetic actuator incorporates an electronics module for position control and positioning feedback. Control path A → AB is closed when the valve is de-energized.

CAUTION:

The valve is suitable for straight-through normally closed or three-way applications and may be installed only in a mixing arrangement.
The direction of flow (A → AB) must be as indicated on the valve.

The fast positioning time, high resolution and high rangeability make these valves ideal for modulating control of chilled and hot water systems in closed circuits. Sturdy construction makes maintenance and regular servicing unnecessary and ensures a long service life.

Ordering

When using a 2-1/2 inch flanged valve in a straight-through application, a blanking flange is required for the third port. If required, order Z155/65 separately.

For screwed valves, no additional ordering is required. The components required to create a straight-through valve are included with the valve.

Principles/ Construction

Automatic Control

The control signal is converted by the microprocessor in the electronics module into an output signal that generates a magnetic field in the core. This causes the only moving part, the armature, to change its position in accordance with the interacting forces (magnetic field, counter-spring, hydraulics, and so on). The armature responds rapidly to any change in signal, transferring the corresponding movement directly to the control disc, enabling fast changes in load to be corrected quickly and accurately. The valve position is measured continuously. The positioning controller ensures an exactly proportional relationship between the control signal and the valve stroke.

Valve Characteristic

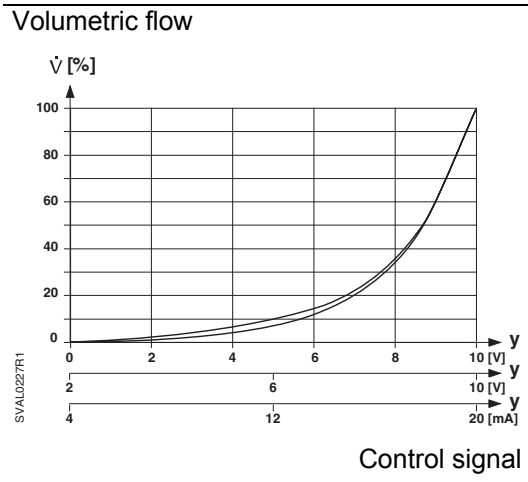

Figure 1. Equal-percentage.

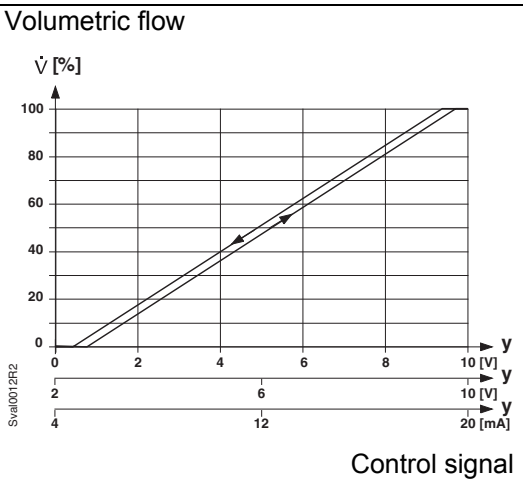

Figure 2. Linear.

In the event of a power failure, or if the power is switched off, the spring force closes the valve automatically (control path ports A → AB normally closed).

Manual Control

The valve control path (ports A → AB) can be opened mechanically up to 95% of the full stroke by pressing the handwheel inward and turning it clockwise (to the MANUAL position). This disables the control signal from the controller.

To disable automatic control of the valve, press the handwheel inward and turn it counterclockwise (to the OFF position). The valve will close.

For automatic control, the handwheel must be set to the AUTO position (the handwheel will spring out).

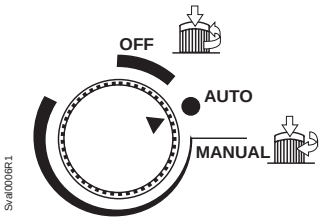

Figure 3. Selecting Automatic Control.

Sizing

Table 1. MX.461…U - Valves Sizing.

Product Numbers	Line Size	C_V	ΔP_{max}		Maximum Close-off Pressure	S_{NA} [1]	P_{med} [1]	I_N [1]	Wire Gauge			
									18	16	14	12
	(in)	(gpm)	(psi)	(bar)	(psi)	(VA)	(W)	(A)	Cable Length L (ft)			
MXG461.15-0.6U	1/2	0.7	44	3	44	29	5	3.15	108	213	361	525
MXG461.15-1.5U	1/2	1.7	44	3	44	29	5	3.15	108	213	361	525
MXG461.15-3.0U	1/2	3.5	44	3	44	29	5	3.15	108	213	361	525
MXG461.20-5.0U	3/4	5.8	44	3	44	29	5	3.15	108	213	361	525
MXG461.25-8.0U	1	9.3	44	3	44	29	5	3.15	108	213	361	525
MXG461.32-12U	1-1/4	14.0	44	3	44	29	5	3.15	108	213	361	525
MXG461.40-20U	1-1/2	23.0	44	3	44	44	6	4.00	66	118	197	328
MXG461.50-30U	2	35.0	44	3	44	44	6	4.00	66	118	197	328
MXF461.65-50U	2-1/2	58.0	44	3	44	46	6	5.00	49	98	164	262

Key:

ΔP_{max} = Maximum permissible differential pressure across the valve's control path, valid for the entire actuating range of the motorized valve.

S_{NA} = Nominal apparent power for selecting transformer

P_{med} = Typical power consumption

I_N = Required slow fuse

C_V = Flow rate to IEC534-2-4
Control path A → AB (normally closed): Tolerance ±5%
Control path B → AB (normally open): Tolerance ±10%

L = Maximum cable length. With four-wire connections, the maximum permissible length of the separate 16 AWG Cu (copper) signal cable is 656 feet. With three-wire connections, the maximum permissible cable length is reduced to 1/3 of the values shown in the table.

1 = All data relates to a 24 Vac supply.

Table 2. Water Flow Chart.

Product Number	Line Size (in)	ΔP_{V100}	PSI														
		C_{VS}	1	2	3	4	5	6	7	8	9	10	15	20	30	40	50
MXG461.15-0.6U	1/2	0.7	0.7	1	1.2	1.4	1.6	1.7	1.9	2.0	2.1	2.2	2.7	3.1	3.8	4.4	4.9
MXG461.15-1.5U	1/2	1.7	1.7	2.4	2.9	3.4	3.8	4.2	4.5	4.8	5.1	5.4	6.6	7.6	9.3	10.8	12
MXG461.15-30U	1/2	3.5	3.5	4.9	6.1	7	7.8	8.6	9.3	9.9	10.5	11	14	16	19	22	25
MXG461.20-50U	3/4	5.8	5.8	8.2	10	12	13	14	15	16	17	18	22	26	32	37	—
MXG461.25-8.0U	1	9.3	9.3	13	16	19	21	23	25	26	28	29	36	42	51	59	—
MXG461.32-12U	1-1/4	14	14	20	24	28	31	34	37	40	42	44	54	63	77	89	—
MXG461.40-20U	1-1/2	23	23	33	40	46	51	56	61	65	69	73	89	103	126	145	—
MXG461.50-30U	2	35	35	49	61	70	78	86	93	99	105	111	136	157	192	221	—
MXF461.65-50U	2-1/2	58	58	82	100	116	130	142	153	164	174	183	225	259	318	367	—

LED Indicators

The two-color LED display indicating operating status can be viewed by opening the cover of the electronics module.

Table 3. LED Display.

LED Display	Status	Description
LED green	On continuously	Automatic mode: Auto (normal, no faults)
	Flashing	– Mechanically set to MANUAL – Mechanically set to OFF – Currently in auto-calibration mode
LED red	On continuously	– General fault – General calibration fault – Microcontroller fault
	Flashing	– Faulty 24 Vac supply (that is, too low)
LED	Off	– No 24 Vac supply – Fault with electronics module

As a general rule, the LED can only assume the conditions in Table 3 (continuously red or green, flashing red or green, or off).

Mounting

Mounting and operating instructions are printed on the actuator and on the electronics module.

The valve is suitable only for straight-through or three-way applications and may be installed only in a mixing arrangement. In the case of the straight-through valve, strict observance of the direction of flow is essential.

Do not mount with actuator below horizontal position.

Access for Mounting

It is essential to maintain the specified minimum clearance above and to the side of the actuator and/or electronics module for servicing, installing and heat dissipation:

- 1/2-inch to 1-1/4 inches = 4 inches
- 1-1/2 inches to 2-1/2 inches = 6 inches

Also see *Dimensions.*

Mounting, Continued

Straight-through Valves

Only three-way MX.461...U valves are supplied. They may be used as straight-through normally closed valves by closing off port "B":

Port "B" can be sealed with a Z155/65 blanking flange and gasket.

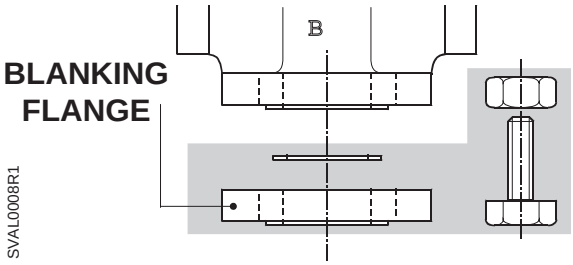

Figure 4. MXF461...U Flanged Valves in Straight-through Applications.

Port "B" can be sealed with the accessories supplied (blanking disk, gasket, and the nut).

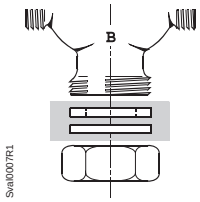

Figure 5. MXG461...U Screwed Valves in Straight-through Applications.

Installation

MXG461...U screwed valves are flat-faced to facilitate sealing with the gaskets supplied.

Do not use hemp, tape or thread-sealing compound.

Do not insulate the actuator.

For notes on electrical installation, see *Terminal Layout*.

Maintenance

The valves and actuators require no maintenance or service. The valve stem is sealed with a maintenance-free O-ring gland.

Should the valve electronics prove faulty, the electronics module should be exchanged for a replacement part, part number ASE1 (1/2-inch to 1-1/4 inches) or ASE2 (1-1/2 inches to 2-1/2 inches). Mounting instructions are enclosed (Ref. 35678).

WARNING:

Under operating conditions within the limits defined by the application data, the actuator will become hot, but this does not represent a fire risk. Always maintain the minimum clearance specified (see *Dimensions*).

Specifications

Electrical Interface	Power supply	Class 2
	Supply voltage – Maximum voltage tolerance	24 Vac, 50/60 Hz +20/–15%
	Control signal (user-selected)	0 to 10 Vdc, 2 to 10 Vdc, or 4 to 20 mA
	Software class	Class A
	Nominal power	See *Sizing*
	Position Signal Y	0 to 10 Vdc, 2 to 10 Vdc, or 4 to 20 mA
	Impedance 0 to 10 Vdc or 2 to 10 Vdc	100k Ω //5nF
	4 to 20 mA	100 Ω //5nF
	Position feedback signal	0 to 10 Vdc; load resistance > 500 Ω
Product Specific Data	Applications	To EN60730
	Nominal pressure	232 psi (16 bar)
	Permissible Operating pressure p_{emax}	150 psi
	Differential pressure ΔP_{max}	See Table 1
	Leakage at ΔP_v = 14.5 psi (0.1 Mpa) (1bar)	A → AB Max. 0.02 % Cv (to IEC534-4) B → AB Depends on operating conditions (<0.2% C_v)
	Admissible media	Water, or water/glycol mixtures with maximum 50% glycol
	Temperature of medium	34°F to 266°F (1°C to 130°C)
	Valve characteristic (stroke, k_{vs})	Linear or equal percentage (user-selected), optimized near the closing point (to IEC534-2-4)
	Stroke resolution $\Delta H/H_{100}$	1:1000 (H = stroke)
	Hysteresis	Typically 3%
	Type of operation	Modulating
	Manual adjustment	Yes, with handwheel
	Position with actuator de-energized	A → AB closed
	Orientation	Upright to horizontal Note that orientation affects protection standard
	Positioning time	<2 seconds
Materials (valve body)	Housing parts	Cast iron
	Plug	CrNi Steel
	Seat	Brass
	Valve stem seal	EPDM (O-ring)
	Bellows	Tombac, bronze, CrNi steel
Electrical connection	Connection terminal	Screw terminals
	Per terminal, with wire (no lug)	2 × 16 AWG or 1 × 14 AWG
	Per terminal with wire	2 × 16 AWG or 1 × 12 AWG
Miscellaneous	Weight (including packaging)	See *Dimensions*
	Dimensions	See *Dimensions*
Ambient conditions	Maximum ambient temperature	113°F (45°C)
Agency Approvals	UL listing	Per UL 873
	C-UL	Certified to Canadian Standard C22.2 No. 24
		Suitable for use in air handling spaces
		NEMA Type 1

Wiring Terminals

WARNING:

Earth ground must be connected to the pipe work.

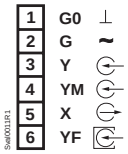

Figure 6. Terminal Layout for Four-wire Connections.

Wiring Diagram

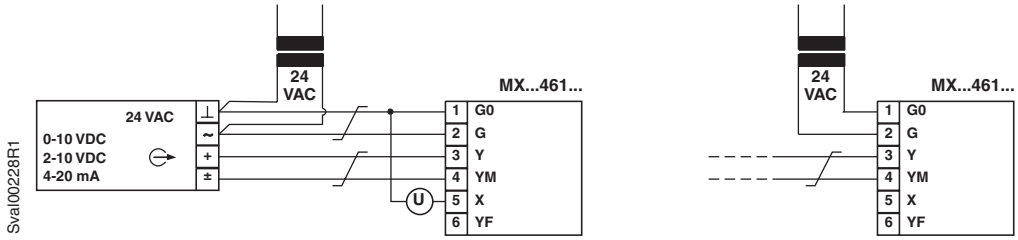

Figure 7. Connection to Controller with Four-wire Output.

(U) = Indication of valve position (only where required). 0 to 10 Vdc → 0 to 100% volumetric flow

If the cables for the 24 Vac supply and the control signal 0 to 10 Vdc (2 to 10 Vdc, 4 to 20 mA are routed separately, twisted pairs are not required for the 24 Vac cable).

Forced Control Feature (Input Terminal YF/6)

0 Vac (Bridge G0 – YF)	Control path A → AB closed
24 Vac (Bridge G – YF)	Control path A → AB open
1 to 9 Vdc at F	Continuously variable low limit control 10% to 90% volume flow (the higher value YF of Y takes priority). This function is available with valves with a manufacturing date of 990701 or later.

Configuration Switches

Switch	Off	On
1 Characteristic	Linear	Equal percentage*
2 Control signal	0 to 10 Vdc*	2 to 10 Vdc or 4 to 20 mA
3 Volts or mA	0(2) to 10 Vdc*	4 to 20 mA

* Factory setting: equal percentage valve characteristic, 0 to 10 Vdc control signal.

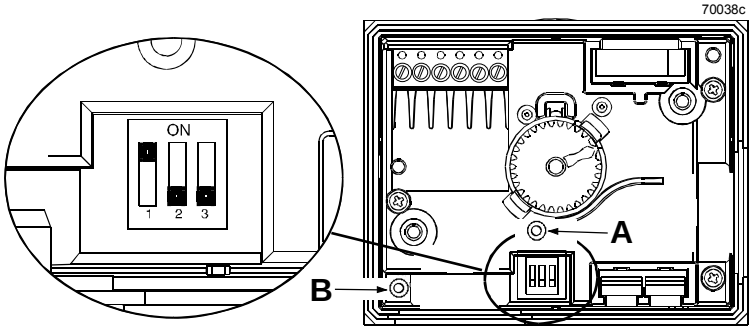

Figure 8. DIP Switches.

Calibration

The MX…461…P magnetic valves are factory-calibrated at 0% and 100% stroke. When commissioning the valves (especially under extreme usage conditions) there may still be some leakage via control path A → AB with a 0% stroke control signal (0 Vdc, 4 mA or 2 Vdc). In this case, the valve can be recalibrated as follows (see Figure 8):

- Use a pin or paper clip to push the button in opening (A) in the terminal housing.
- During calibration, the LED light (B) in the electronics module will flash green for approximately 10 seconds. The valve will be briefly closed and fully opened.

Application Example

CAUTION:

This valve is suitable for straight-through normally closed or three-way applications only, and should only be installed in a mixing arrangement.

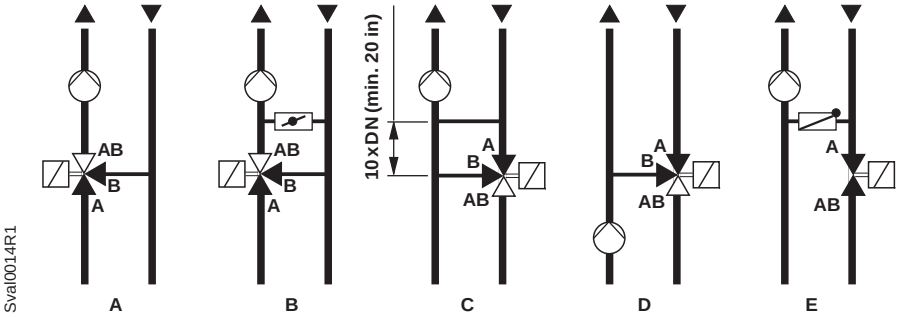

A Mixing circuit
B Mixing circuit with bypass (underfloor heating)
C Injection circuit
D Diverting circuit
E Injection circuit with straight-through valve

Figure 9. Hydraulic Circuits.

Service

CAUTION:

Do not disassemble the valve and actuator combination. This assembly is factory-calibrated, and should only be replaced by qualified personnel.

Dimensions

All dimensions in inches (millimeters)

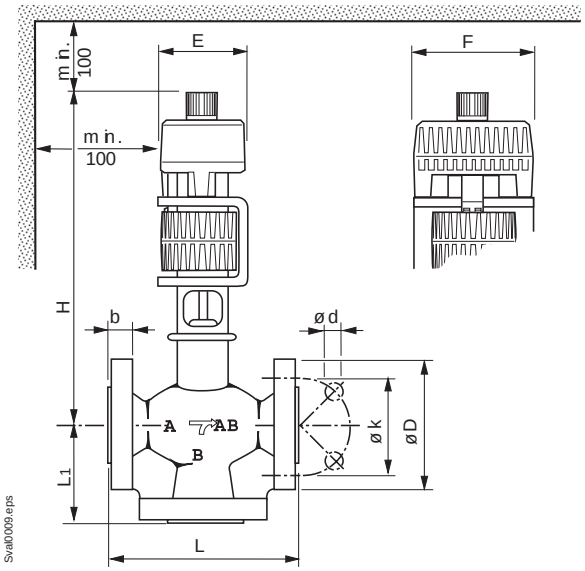

Table 4. MXF461…U – Flanged Valve with Electronics Module.

Product Number	L	L1	D	b	k	d 4X	H	E	F	lbs (kg)
MXF461.65-50U	11.42 (290)	4.92 (125)	7.00 (177.8)	0.88 (22.4)	5.50 (139.7)	0.75 (19.05)	15.43 (392)	3.15 (80)	3.94 (100)	63.1 (28.6)

NOTE: Installer must supply counterflanges.

lbs. (kg) = Weight (including packaging)

Dimensions, Continued

All dimensions in inches
(millimeters)

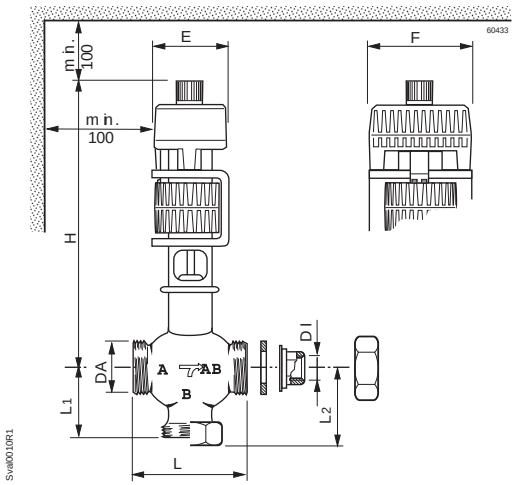

Table 5. MXG461…U –Valves with Electronics Module.

Product Number	DI	DA	L	L1	L2 *	H	E	F	lbs (kg)
MXG461.15-0.6U	1/2	1	3.15 (80)	1.67 (42.5)	2.01 (51)	9.45 (240)	3.15 (80)	3.94 (100)	8.4 (3.8)
MXG461.15-1.5U	1/2	1	3.15 (80)	1.67 (42.5)	2.01 (51)	9.45 (240)	3.15 (80)	3.94 (100)	8.4 (3.8)
MXG461.15-3.0U	1/2	1	3.15 (80)	1.67 (42.5)	2.01 (51)	9.45 (240)	3.15 (80)	3.94 (100)	8.4 (3.8)
MXG461.20-5.0U	3/4	1-1/4	3.74 (95)	2.07 (52.5)	2.40 (61)	10.24 (260)	3.15 (80)	3.94 (100)	9.3 (4.2)
MXG461.25-8.0U	1	1-1/2	4.33 (110)	2.22 (56.5)	2.56 (65)	10.63 (270)	3.15 (80)	3.94 (100)	10.4 (4.7)
MXG461.32-12U	1-1/4	2	4.92 (125)	2.66 (67.5)	2.99 (76)	11.22 (285)	3.15 (80)	3.94 (100)	12.3 (5.6)
MXG461.40-20U	1-1/2	2-1/4	5.51 (140)	3.17 (80.5)	3.70 (94)	12.60 (320)	3.94 (100)	4.72 (120)	20.5 (9.3)
MXG461.50-30U	2	2-3/4	6.69 (170)	3.68 (93.5)	4.29 (109)	13.39 (340)	3.94 (100)	4.72 (120)	26.2 (11.9)

* When used as a straight-through valve

lbs. (kg) = Weight (including packaging)