XC14 SERIES UNITS

The XC14 is a high efficiency residential split-system condensing unit, which features a scroll compressor and R-410A refrigerant. XC14 units are available in sizes ranging from 1 1/2 through 5 tons. The series is designed for use with an expansion valve or RFC (approved for use with R-410A) in the indoor unit. This manual is divided into sections which discuss the major components, refrigerant system, charging procedure, maintenance and operation sequence.

Information contained in this manual is intended for use by qualified service technicians only. All specifications are subject to change.

⚠ WARNING

Improper installation, adjustment, alteration, service or maintenance can cause property damage, personal injury or loss of life. Installation and service must be performed by a qualified installer or service agency.

⚠ WARNING

Warranty will be voided if covered equipment is removed from original installation site. Warranty will not cover damage or defect resulting from:
Flood, wind, lightning, or installation and operation in a corrosive atmosphere (chlorine, fluorine, salt, recycled waste water, urine, fertilizers, or other damaging chemicals).

⚠ DANGER

Shock Hazard
Remove all power at disconnect before removing access panel. Single phase XC14 units use single-pole contactors. Potential exists for electrical shock resulting in injury or death.
Line voltage exist at all components (even when unit is not in operation).

⚠ IMPORTANT

Operating pressures of this R-410A unit are higher than pressures in R-22 units. Always use service equipment rated for R410A.

TABLE OF CONTENTS

General . . . . . Page 1
Specifications / Electrical Data . . . . . Page 2
I Application . . . . . Page 4
II Unit Components . . . . . Page 4
III Refrigeration System . . . . . Page 8
IV Charging . . . . . Page 9
V Service and Recovery . . . . . Page 21
VI Maintenance . . . . . Page 21
VII Wiring and Sequence of Operation . . Page 22

hvacUSA.com
A MechTronics Controls Company
www.hvacusa.com
Phone (877) 632-4876

©2007 Lennox Industries Inc.

SPECIFICATIONS *-1 units and 030 through 060 -2 units*

General Data	Model No.	XC14-018	XC14-024	XC14-030	XC14-036	XC14-042	XC14-048	XC14-060
	Nominal Tonnage	1.5	2	2.5	3	3.5	4	5
Connections (sweat)	Liquid line o.d. - in.	3/8	3/8	3/8	3/8	3/8	3/8	3/8
	Suction line o.d. - in.	3/4	3/4	3/4	7/8	7/8	7/8	1-1/8
[1] **Refrigerant (R-410A) furnished**		6 lbs. 12 oz.	7 lbs. 10 oz.	8 lbs. 0 oz.	8 lbs. 9 oz.	8 lbs. 10 oz.	10 lbs. 0 oz.	12 lbs. 0 oz.
Outdoor Coil	Net face area - sq. ft. Outer coil	13.22	13.22	16.33	16.33	16.33	21.00	22.00
	Net face area - sq. ft. Inner coil	12.60	12.60	15.71	15.71	15.71	20.25	21.33
	Tube diameter - in.	5/16	5/16	5/16	5/16	5/16	5/16	5/16
	Number of rows	2	2	2	2	2	2	2
	Fins per inch	22	22	22	22	22	22	22
Outdoor Fan	Diameter - in.	18	18	22	22	22	22	26
	Number of blades	4	4	4	4	4	4	4
	Motor hp	1/5	1/5	1/6	1/6	1/4	1/4	1/3
	Cfm	2400	2400	2900	2900	3500	3600	4400
	Rpm	1100	1100	825	825	825	825	825
	Watts	200	200	220	220	310	310	310
Shipping Data - lbs. 1 package		146	148	169	172	198	221	238
ELECTRICAL DATA								
	Line voltage data - 60 hz - 1ph	208/230V	208/230V	208/230V	208/230V	208/230V	208/230V	208/230V
	[2] Maximum overcurrent protection (amps)	20	30	30	30	40	50	60
	[3] Minimum circuit ampacity	12.3	17.9	17.2	18.7	24.1	29.0	34.8
Compressor	Rated load amps	9.0	13.4	12.9	14.1	17.9	21.8	26.4
	Power factor	.96	.97	.98	.98	.94	.95	.98
	Locked rotor amps	48	58	64	77	112	117	134
Condenser Fan Motor	Full load amps	1.0	1.0	1.1	1.1	1.7	1.7	1.8
	Locked rotor amps	1.9	1.9	2.1	2.1	3.1	3.1	2.9
OPTIONAL ACCESSORIES - must be ordered extra								
Compressor Crankcase Heater	**93M05**	•	•	•	•			
	93M06					•	Factory	Factory
Compressor Hard Start Kit	**10J42**	•						
	88M91		•	•	•	•	•	•
Compressor Low Ambient Cut-Off	**45F08**	•	•	•	•	•	•	•
Compressor Time-Off Control	**47J27**	•	•	•	•	•	•	•
Freezestat	3/8 in. tubing **93G35**	•	•	•	•	•	•	•
	5/8 in. tubing **50A93**	•	•	•	•	•	•	•
Indoor Blower Off Delay Relay	**58M81**	•	•	•	•	•	•	•
Loss of Charge Switch Kit	**84M23**	•	•	•	•	•	•	•
Low Ambient Kit	**34M72**	•	•	•	•	•	•	•
Refrigerant Line Sets	L15-41-20, L15-41-30, L15-41-40, L15-41-50	•	•	•				
	L15-65-30, L15-65-40, L15-65-50				•	•	•	
	Field Fabricate							•

NOTE — Extremes of operating range are plus 10% and minus 5% of line voltage.
[1] Refrigerant charge sufficient for 15 ft. length of refrigerant lines.
[2] HACR type circuit breaker or fuse.
[3] Refer to National or Canadian Electrical Code manual to determine wire, fuse and disconnect size requirements.

SPECIFICATIONS *018, 024 -2 units & 030 through 060 -3 units*

General Data	**Model No.**	**XC14-018**	**XC14-024**	**XC14-030**	**XC14-036**	**XC14-042**	**XC14-048**	**XC14-060**
	Nominal Tonnage	1.5	2	2.5	3	3.5	4	5
Connections (sweat)	Liquid line o.d. - in.	3/8	3/8	3/8	3/8	3/8	3/8	3/8
	Suction line o.d. - in.	3/4	3/4	3/4	7/8	7/8	7/8	1-1/8
[1] Refrigerant (R-410A) furnished		5 lbs. 11 oz.	6 lbs. 8 oz.	6 lbs. 11 oz.	6 lbs. 11 oz.	8 lbs. 10 oz.	10 lbs. 0 oz.	12 lbs. 0 oz.
Outdoor Coil	Net face area - sq. ft. Outer coil	13.22	18.67	21.00	21.00	16.33	21.00	22.00
	Net face area - sq. ft. Inner coil	- - -	- - -	- - -	- - -	15.71	20.25	21.33
	Tube diameter - in.	5/16	5/16	5/16	5/16	5/16	5/16	5/16
	Number of rows	1	1	1	1	2	2	2
	Fins per inch	26	26	26	26	22	22	22
Outdoor Fan	Diameter - in.	18	22	22	22	22	22	26
	Number of blades	3	3	3	3	4	4	4
	Motor hp	1/10	1/6	1/6	1/6	1/4	1/4	1/3
	Cfm	2270	3160	3160	3160	3500	3600	4400
	Rpm	1050	850	850	850	825	825	825
	Watts	165	215	215	215	310	310	310
Shipping Data - lbs. 1 package		163	203	215	217	243	272	290
ELECTRICAL DATA								
	Line voltage data - 60 hz - 1ph	208/230V	208/230V	208/230V	208/230V	208/230V	208/230V	208/230V
	[2] Maximum overcurrent protection (amps)	25	30	30	30	40	50	60
	[3] Minimum circuit ampacity	15.7	17.9	17.2	18.7	24.1	29.0	34.8
Compressor	Rated load amps	9.0	13.4	12.9	14.1	17.9	21.8	26.4
	Power factor	.93	.97	.98	.98	.94	.95	.98
	Locked rotor amps	48	58	64	77	112	117	134
Condenser Fan Motor	Full load amps	0.7	1.1	1.1	1.1	1.7	1.7	1.8
	Locked rotor amps	1.4	2.1	2.1	2.1	3.1	3.1	2.9
OPTIONAL ACCESSORIES - must be ordered extra								
Compressor Crankcase Heater	**93M04**	•	•	•	•			
	93M06					•	Factory	Factory
Compressor Hard Start Kit	**10J42**	•						
	88M91		•	•	•	•	•	•
Compressor Low Ambient Cut-Off	**45F08**	•	•	•	•	•	•	•
Compressor Time-Off Control	**47J27**	•	•	•	•	•	•	•
Freezestat 3/8 in. tubing	**93G35**	•	•	•	•	•	•	•
5/8 in. tubing	**50A93**	•	•	•	•	•	•	•
Indoor Blower Off Delay Relay	**58M81**	•	•	•	•	•	•	•
Loss of Charge Switch Kit	**84M23**	•	•	•	•	•	•	•
Low Ambient Kit	**34M72**	•	•	•	•	•	•	•
Refrigerant Line Sets	L15-41-20, L15-41-30, L15-41-40, L15-41-50	•	•	•				
	L15-65-30, L15-65-40, L15-65-50				•	•	•	
	Field Fabricate							•

NOTE — Extremes of operating range are plus 10% and minus 5% of line voltage.
[1] Refrigerant charge sufficient for 15 ft. length of refrigerant lines.
[2] HACR type circuit breaker or fuse.
[3] Refer to National or Canadian Electrical Code manual to determine wire, fuse and disconnect size requirements.

I - APPLICATION

XC14 condensing units are available in 1 1/2, 2, 2 -1/2, 3, 3 -1/2, 4 and 5 ton capacities. All major components (indoor blower and coil) must be matched according to Lennox recommendations for the compressor to be covered under warranty. Refer to the Engineering Handbook for approved system matchups.

II - UNIT COMPONENTS

Unit components are illustrated in figure 1.

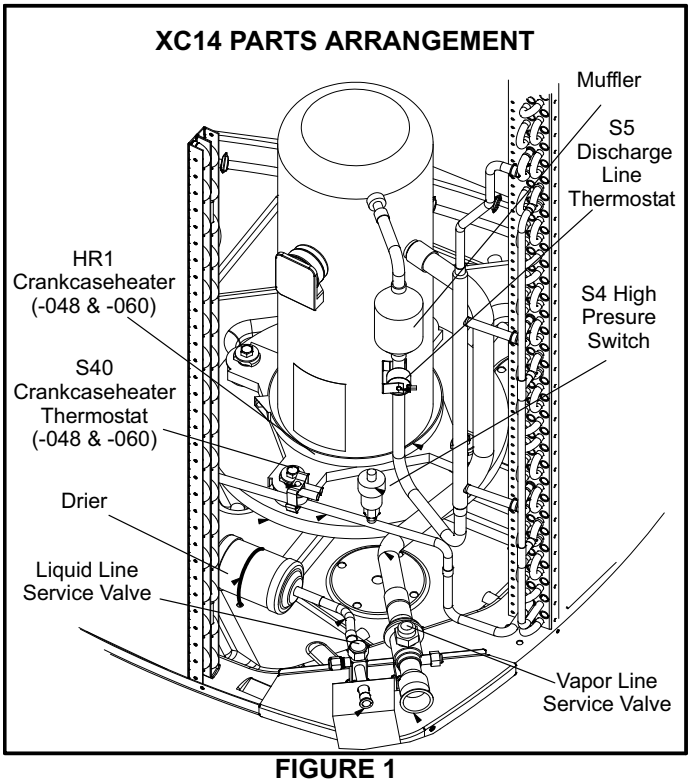

FIGURE 1

⚠ CAUTION

To prevent personal injury, or damage to panels, unit or structure, be sure to observe the following:

While installing or servicing this unit, carefully stow all removed panels out of the way, so that the panels will not cause injury to personnel, nor cause damage to objects or structures nearby, nor will the panels be subjected to damage (e.g., being bent or scratched).

While handling or stowing the panels, consider any weather conditions, especially windy conditions, that may cause panels to be blown around and battered.

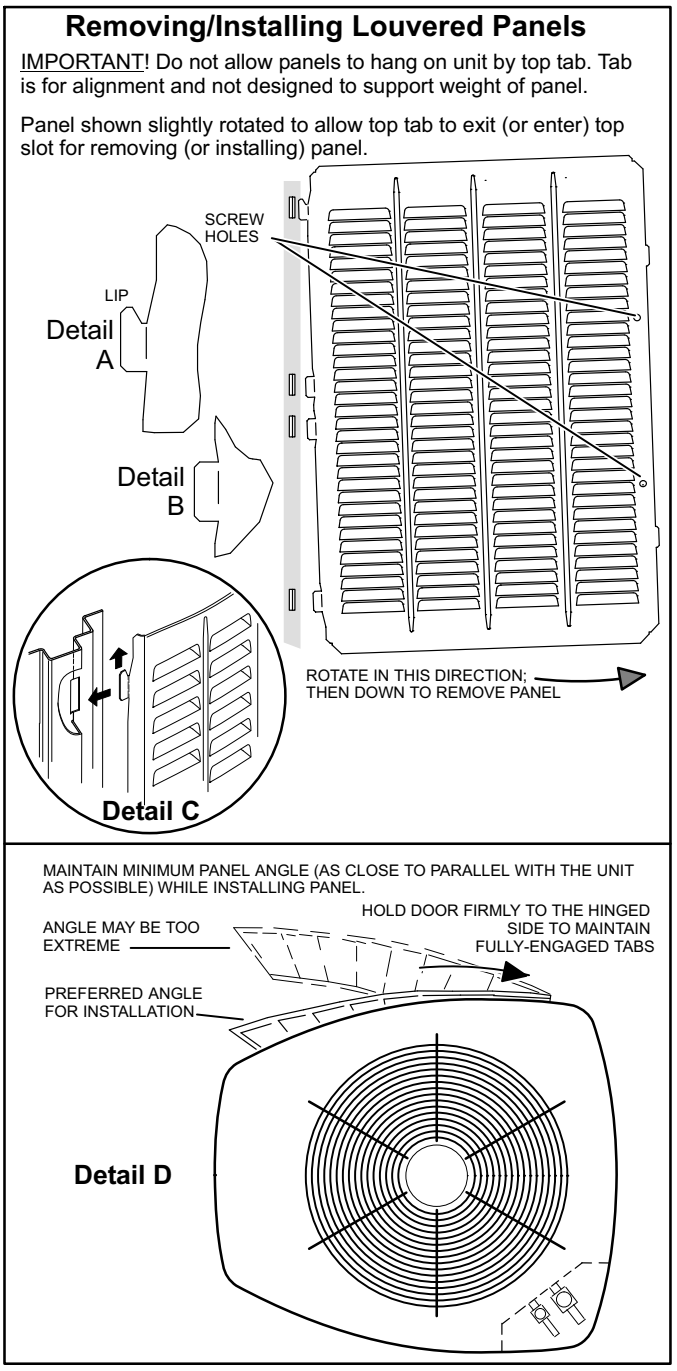

FIGURE 2

Remove the louvered panels as follows:

1. Remove 2 screws, allowing the panel to swing open slightly (see figure 2).
2. **Hold the panel firmly throughout this procedure.** Rotate bottom corner of panel away from hinge corner post until lower 3 tabs clear the slots (see figure 2, Detail B).

3.Move panel down until lip of upper tab clears the top slot in corner post (see figure 2, Detail A).

Position and Install Panel—Position the panel almost parallel with the unit (figure 2, Detail D) with the “screw side” as close to the unit as possible. Then, in a continuous motion:

Slightly rotate and guide the lip of top tab inward (figure 2, Details A and C); then upward into the top slot of the hinge corner post.

Rotate panel to vertical to fully engage all tabs.

Holding the panel’s hinged side firmly in place, close the right-hand side of the panel, aligning the screw holes.

When panel is correctly positioned and aligned, insert the screws and tighten.

A - Control Box (Figure 3)

XC14 units are not equipped with a 24V transformer. All 24 VAC controls are powered by the indoor unit. Refer to wiring diagram.

Electrical openings are provided under the control box cover. Field thermostat wiring is made to color-coded pigtail connections.

ELECTROSTATIC DISCHARGE (ESD)
Precautions and Procedures

⚠ CAUTION

Electrostatic discharge can affect electronic components. Take precautions during unit installation and service to protect the unit’s electronic controls. Precautions will help to avoid control exposure to electrostatic discharge by putting the unit, the control and the technician at the same electrostatic potential. Neutralize electrostatic charge by touching hand and all tools on an unpainted unit surface before performing any service procedure.

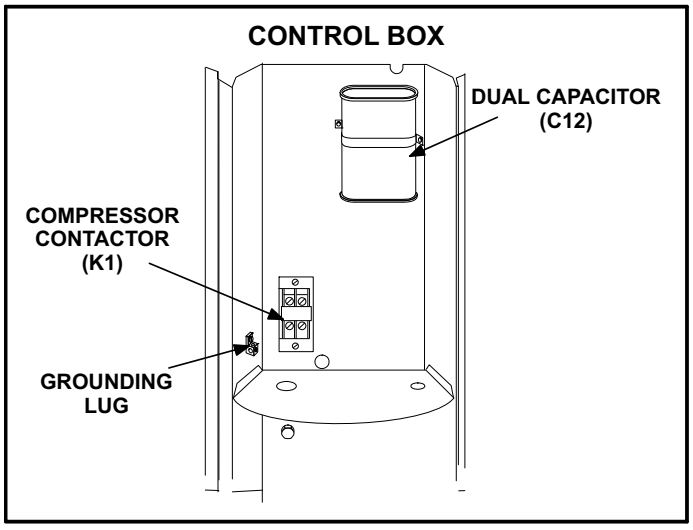

FIGURE 3

1 - Compressor Contactor (K1)

The compressor is energized by a single-pole contactor located in the control box. See figure 3. K1 is energized by the indoor thermostat terminal Y1 (24V) when thermostat demand is present.

2 - Dual Capacitor (C12)

The compressor and fan in XC14 series units use permanent split capacitor motors. The capacitor is located inside the unit control box (see figure 3). A single “dual” capacitor (C12) is used for both the fan motor and the compressor (see unit wiring diagram). The fan side and the compressor side of the capacitor have different MFD ratings. See side of capacitor for ratings.

3 - Timed Off Control TOC (option) (A4)

The time delay is electrically connected between thermostat terminal Y and the compressor contactor. Between cycles, the compressor contactor is delayed for 5 minutes ± 2 minutes but may last as long as 8 minutes. At the end of the delay, the compressor is allowed to energize. When thermostat demand is satisfied, the time delay opens the circuit to the compressor contactor coil and the compressor is de-energized.

4 - Start Kit (option)

The start kit consist of a potential relay K31 and start capacitor C7. The potential relay controls the operation of the starting circuit. The relay is normally closed when contactor K1 is de-energized. When K1 is energized, the compressor immediately begins start up. K31 remains closed during compressor start up and capacitor C7 remains in the circuit. When compressor reaches approximately 75% of its speed, K31 is energized. When K31 energizes, the contacts open and start capacitor C7 is taken out of the circuit.

B - Compressor (B1)

The scroll compressor used in all XC14 model units, is designed for use with R410A refrigerant and operation at high pressures. Compressors are shipped from the factory charged with 3MA (32MMMA) P.O.E. oil. All XC14 compressors are equipped with a factory installed sound cover made of polyethylene containing a 2 inch thick batt of fiberglass insulation. See figure 5.

See ELECTRICAL DATA table at the front of this manual or compressor nameplate for compressor specifications.

The scroll compressor design is simple, efficient and requires few moving parts. A cutaway diagram of the scroll compressor is shown in figure 4. The scrolls are located in the top of the compressor can and the motor is located just below. The oil level is immediately below the motor.

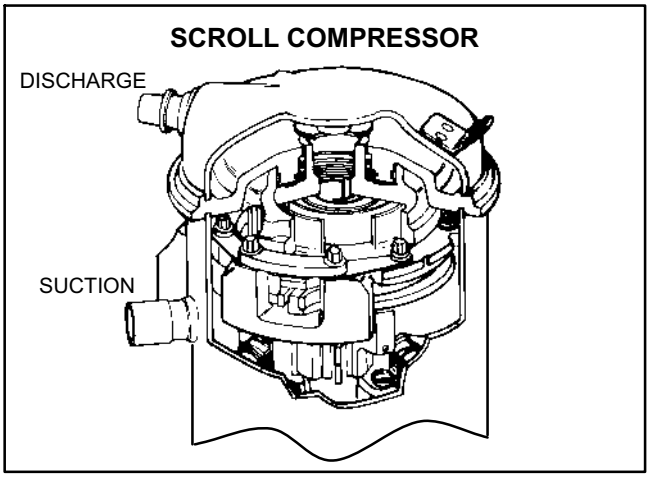

FIGURE 4

The scroll is a simple compression concept centered around the unique spiral shape of the scroll and its inherent properties. Figure 6 shows the basic scroll form. Two identical scrolls are mated together forming concentric spiral shapes (figure 7). One scroll remains stationary, while the other is allowed to ”orbit” (figure 8). Note that the orbiting scroll does not rotate or turn but merely orbits the stationary scroll.

NOTE - During operation, the head of a scroll compressor may be hot since it is in constant contact with discharge gas.

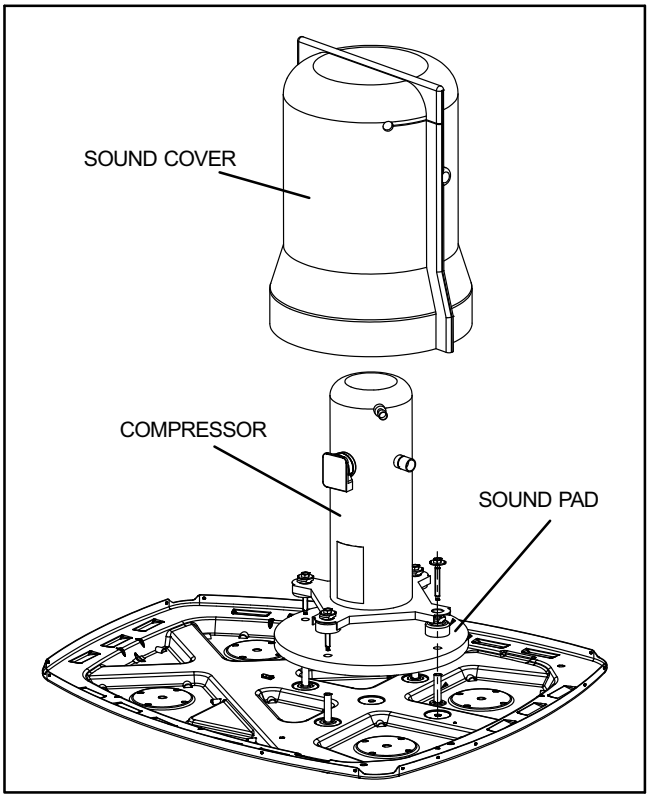

FIGURE 5

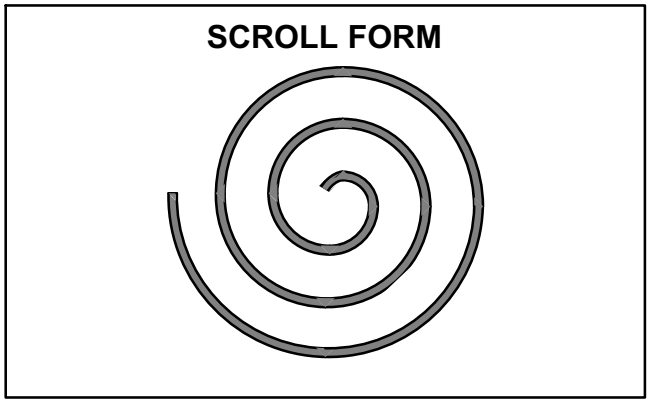

FIGURE 6

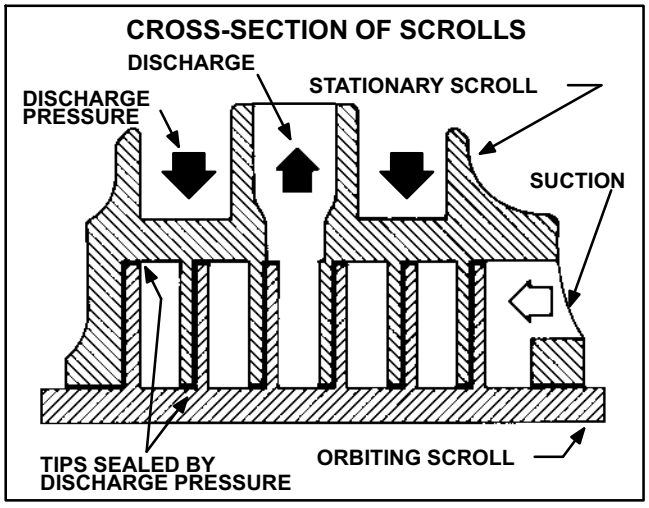

FIGURE 7

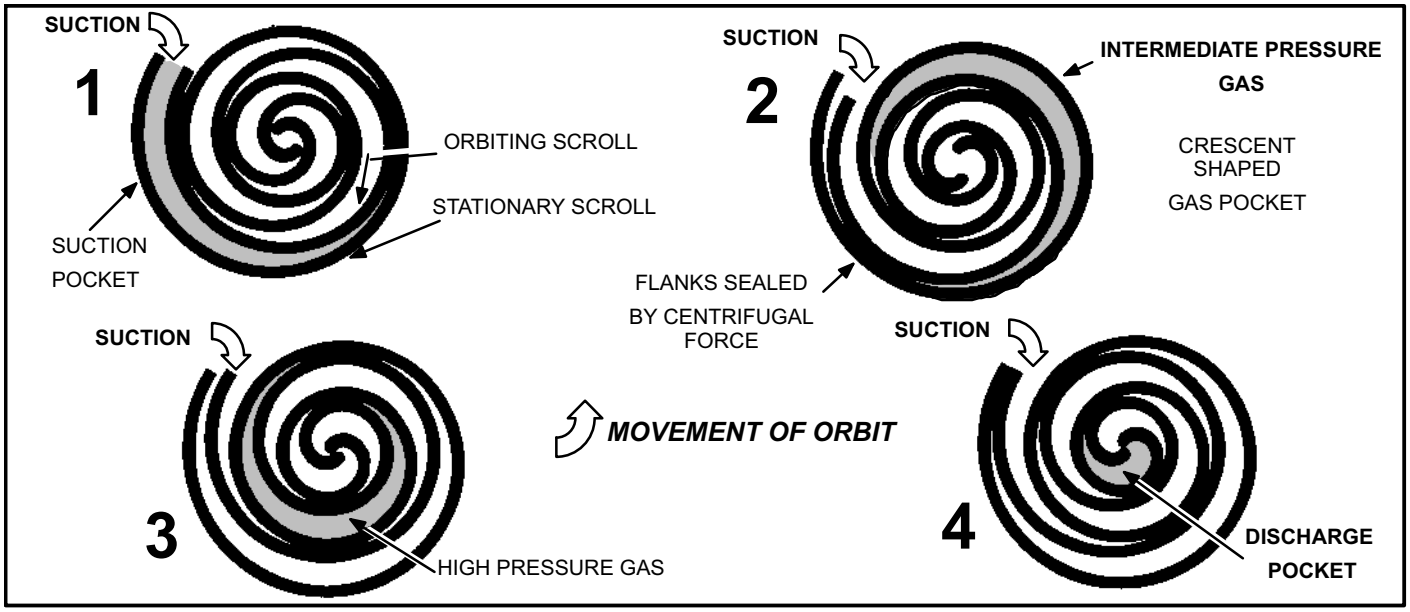

FIGURE 8

The counterclockwise orbiting scroll draws gas into the outer crescent shaped gas pocket created by the two scrolls (figure 8 - 1). The centrifugal action of the orbiting scroll seals off the flanks of the scrolls (figure 8 - 2). As the orbiting motion continues, the gas is forced toward the center of the scroll and the gas pocket becomes compressed (figure 8 - 3). When the compressed gas reaches the center, it is discharged vertically into a chamber and discharge port in the top of the compressor (figure 6). The discharge pressure forcing down on the top scroll helps seal off the upper and lower edges (tips) of the scrolls (figure 6). During a single orbit, several pockets of gas are compressed simultaneously providing smooth continuous compression.

The scroll compressor is tolerant to the effects of liquid return. If liquid enters the scrolls, the orbiting scroll is allowed to separate from the stationary scroll. The liquid is worked toward the center of the scroll and is discharged. If the compressor is replaced, conventional Lennox cleanup practices must be used.

Due to its efficiency, the scroll compressor is capable of drawing a much deeper vacuum than reciprocating compressors. Deep vacuum operation can cause internal fusite arcing resulting in damaged internal parts and will result in compressor failure. Never use a scroll compressor for evacuating or "pumping-down" the system. This type of damage can be detected and will result in denial of warranty claims.

The scroll compressor is quieter than a reciprocating compressor, however, the two compressors have much different sound characteristics. The sounds made by a scroll compressor do not affect system reliability, performance, or indicate damage.

C - Drier

A filter drier designed for all XC14 model units must be installed in the liquid line. The field installed drier is designed to remove moisture, which can lead to compressor failure. **Any time unit is exposed to open air due to service, drier must be replaced. All replacement driers must be approved for R410A refrigerant.**

D - Condenser Fan Motor (B4)

⚠ DANGER

Make sure all power is disconnected before beginning electrical service procedures.

All units use single-phase PSC fan motors which require a run capacitor. In all units, the condenser fan is controlled by the compressor contactor.

ELECTRICAL DATA tables in this manual show specifications for condenser fans used in XC14's.

Access to the condenser fan motor on all units is gained by removing the four screws securing the fan assembly. See figure 9. The grill fan assembly can be removed from the cabinet as one piece. See figure 10. The condenser fan motor is removed from the fan guard by removing the four nuts found on top of the grill. See figure 10 if condenser fan motor replacement is necessary.

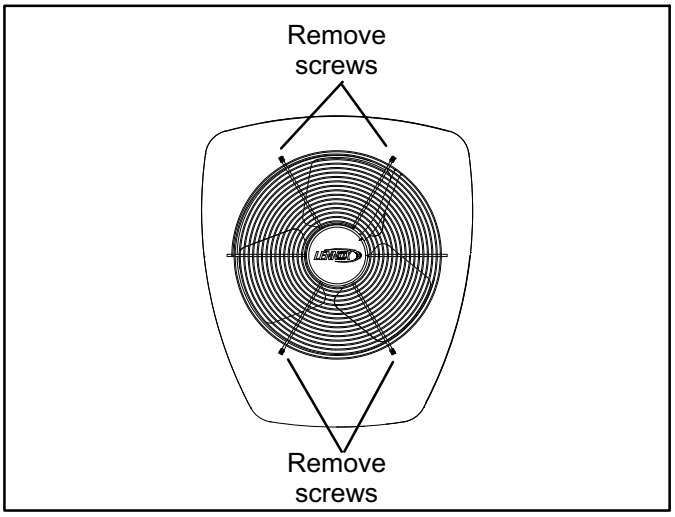

FIGURE 9

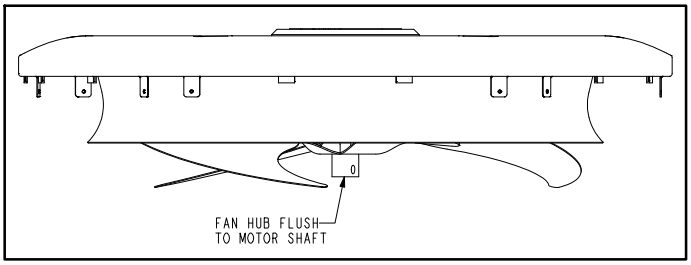

FIGURE 10

E - Discharge Line Thermostat (S5)

The discharge line thermostat is NC, auto re-set and located on the discharge line of the compressor. The switch opens when discharge line temperatures exceeds the factory setting of 220° ± 5° F and shuts down the compressor.

F - High Pressure Switch (S4)

XC14 units are equipped with a high pressure switch that is located in the liquid line of the compressor. The switch (SPST, manual reset, normally closed) removes power from the compressor contactor control circuit when discharge pressure rises above factory setting at 590 ± 10 psi.

G - Crankcase Heater (HR1) & Thermostat (S40) 4 and 5 ton only

XC14-048 and -060 units are equipped with a 70 watt belly band type crankcase heater. HR1 prevents liquid from accumulating in the compressor. HR1 is controlled by a thermostat located on the liquid line. When liquid line temperature drops below 50° F the thermostat closes energizing HR1. The thermostat will open, de-energizing HR1 once liquid line temperature reaches 70° F.

H - Loss of Charge Switch (option) (S24)

The loss of charge switch is NC, auto re-set and located on the suction line of the compressor.The switch opens when suction line pressure drops to 25psi ± 5 (shutting down the compressor) and will close when suction line pressure rises to 55psi ± 5.

III - REFRIGERANT SYSTEM

A - Plumbing

Field refrigerant piping consists of liquid and suction lines from the condensing unit (sweat connections) to the indoor evaporator coil (sweat connections). Use Lennox L15 (sweat) series line sets as shown in table 1.

TABLE 1

Unit	Liquid Line	Suction Line	L15 Line Sets
018, -024, -030,	3/8 in. (10 mm)	3/4 in. (19 mm)	L15-41 20 ft. - 50 ft. (6 m - 15 m)
-036, -042, -048	3/8 in. (10 mm)	7/8 in. (22 mm)	L15-65 30 ft. - 50 ft. (9 m - 15 m)
-060	3/8 in. (10 mm)	1-1/8 in. (29 mm)	Field Fabricated

The liquid line and vapor line service valves (figures 11 and 12) and gauge ports are accessible from the outside of the unit. Use the service ports for leak testing, evacuating, charging and checking charge.

Each valve is equipped with a service port which has a factory-installed Schrader valve. A service port cap protects the Schrader valve from contamination and serves as the primary leak seal. *Service valves are not rebuildable. If a valve has failed, you must replace it.*

To Access Schrader Port:

1 - Remove service port cap with an adjustable wrench.

2 - Connect gauge to the service port.

3 - When testing is complete, replace service port cap. Tighten finger tight, then an additional 1/6 turn.

To Open Service Valve:

1 - Remove the stem cap with an adjustable wrench.

2 - Using the adjustable wrench to keep the valve stationary, use a service wrench with a hex-head extension to back the stem out counterclockwise as far as it will go.

NOTE - Use a 3/16" hex head extension for 3/8" line sizes or a 5/16" extension for large line sizes.

3 - Replace the stem cap. Tighten finger tight, then tighten an additional 1/6 turn.

To Close Service Valve:

1 - Remove the stem cap with an adjustable wrench.

2 - Using the adjustable wrench to keep the valve stationary, use a service wrench with a hex-head extension to turn the stem clockwise to seat the valve. Tighten the stem firmly.

NOTE - Use a 3/16" hex head extension for 3/8" line sizes or a 5/16" extension for large line sizes.

3 - Replace the stem cap. Tighten finger tight, then tighten an additional 1/6 turn.

NOTE - Stem cap must be replaced to help prevent valve leakage.

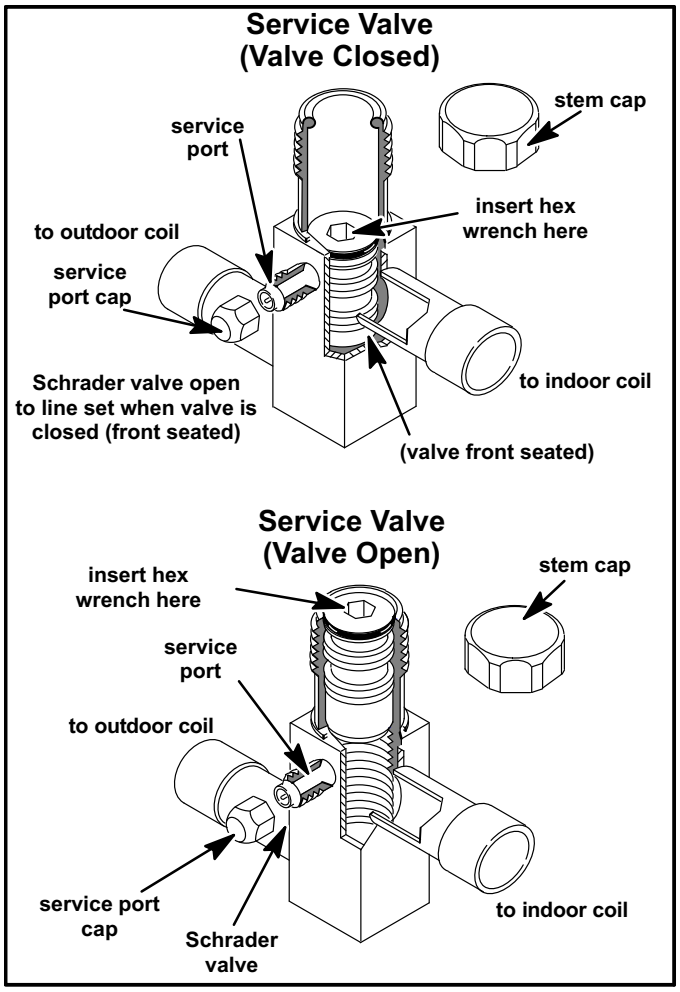

FIGURE 11

Vapor Line Ball Valve – 5 Ton Units Only

Vapor line service valves function the same way as the other valves, the difference is in the construction. A ball valve is illustrated in figure 12.

The ball valve is equipped with a service port with a factory-installed Schrader valve. A service port cap protects the Schrader valve from contamination and assures a leak-free seal.

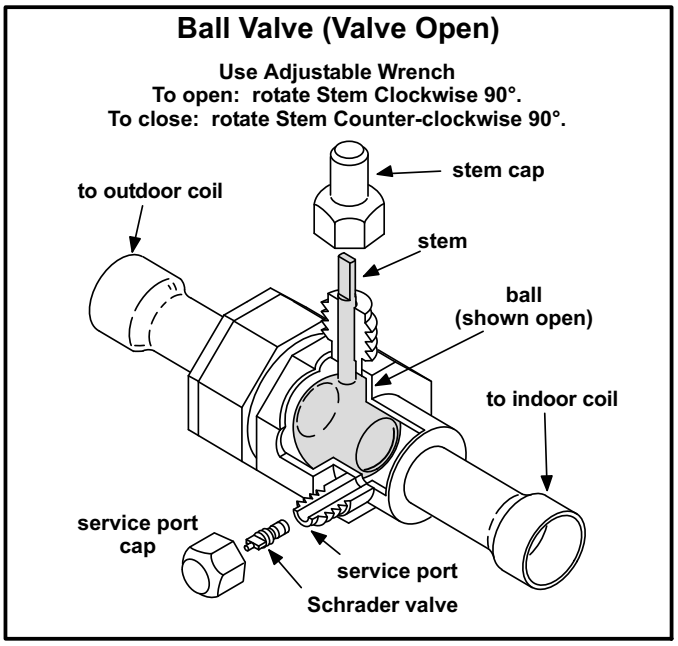

FIGURE 12

IV - CHARGING

⚠ WARNING

R-410A refrigerant can be harmful if it is inhaled. R-410A refrigerant must be used and recovered responsibly.

Failure to follow this warning may result in personal injury or death.

A - Leak Testing

After the line set has been connected to the indoor and outdoor units, check the line set connections and indoor unit for leaks.

⚠ IMPORTANT

The Clean Air Act of 1990 bans the intentional venting of (CFC's and HFC's) as of July 1, 1992. Approved methods of recovery, recycling or reclaiming must be followed. Fines and/or incarceration my be levied for noncompliance.

⚠ WARNING

Fire, Explosion and Personal Safety Hazard.

Failure to follow this warning could result in damage, personal injury or death.

Never use oxygen to pressurize or purge refrigeration lines. Oxygen, when exposed to a spark or open flame, can cause damage by fire and/or an explosion, that could result in personal injury or death.

⚠ WARNING

Danger of explosion!

When using a high pressure gas such as dry nitrogen to pressurize a refrigerant or air conditioning system, use a regulator that can control the pressure down to 1 or 2 psig (6.9 to 13.8 kPa).

Using an Electronic Leak Detector

1 - Connect a cylinder of R-410A to the center port of the manifold gauge set. Connect manifold gauge to service valve port.

2 - With both manifold valves closed, open the valve on the R-410A cylinder.

3 - Open the high pressure side of the manifold to allow the R-410A into the line set and indoor unit. Weigh in a trace amount of R-410A. [A trace amount is a maximum of 2 ounces (57 g) or 3 pounds (31 kPa) pressure.] Close the valve on the R-410A cylinder and the valve on the high pressure side of the manifold gauge set. Disconnect the R-410A cylinder.

4 - Connect a cylinder of nitrogen with a pressure regulating valve to the center port of the manifold gauge set.

5 - Connect the manifold gauge set high pressure hose to the vapor valve service port. *(Normally, the high pressure hose is connected to the liquid line port; however, connecting it to the vapor port better protects the manifold gauge set from high pressure damage.)*

6 - Adjust the nitrogen pressure to 150 psig (1034 kPa). Open the valve on the high side of the manifold gauge set which will pressurize line set and indoor unit.

7 - After a few minutes, open a refrigerant port to ensure the refrigerant you added is adequate to be detected. (Amounts of refrigerant will vary with line lengths.) Check all joints for leaks. Purge nitrogen and R-410A mixture. Correct any leaks and recheck.

B - Evacuating

Evacuating the system of noncondensables is critical for proper operation of the unit. Noncondensables are defined as any gas that will not condense under temperatures and pressures present during operation of an air conditioning system. Noncondensables and water vapor combine with refrigerant to produce substances that corrode copper piping and compressor parts.

NOTE - This evacuation process is adequate for a new installation with clean and dry lines. If excessive moisture is present, the evacuation process may be required more than once.

⚠ IMPORTANT

Use a thermocouple or thermistor electronic vacuum gauge that is calibrated in microns. Use an instrument that reads from 50 microns to at least 10,000 microns.

1 - Connect manifold gauge set to the service valve ports :
- low pressure gauge to *vapor* line service valve
- high pressure gauge to *liquid* line service valve

2 - Connect micron gauge.

3 - Connect the vacuum pump (with vacuum gauge) to the center port of the manifold gauge set.

4 - Open both manifold valves and start the vacuum pump.

5 - Evacuate the line set and indoor unit to an **absolute pressure** of 23,000 microns (29.01 inches of mercury). During the early stages of evacuation, it is desirable to close the manifold gauge valve at least once to determine if there is a rapid rise in **absolute pressure**. A rapid rise in pressure indicates a relatively large leak. If this occurs, repeat the leak testing procedure.

*NOTE - The term **absolute pressure** means the total actual pressure within a given volume or system, above the absolute zero of pressure. Absolute pressure in a vacuum is equal to atmospheric pressure minus vacuum pressure.*

6 - When the absolute pressure reaches 23,000 microns (29.01 inches of mercury), close the manifold gauge valves, turn off the vacuum pump and disconnect the manifold gauge center port hose from vacuum pump. Attach the manifold center port hose to a nitrogen cylinder with pressure regulator set to 150 psig (1034 kPa) and purge the air from the hose with nitrogen. Open the manifold gauge valves to break the vacuum in the line set and indoor unit. Close the manifold gauge valves.

⚠ CAUTION

Danger of Equipment Damage.
Avoid deep vacuum operation. Do not use compressors to evacuate a system.
Extremely low vacuums can cause internal arcing and compressor failure.
Damage caused by deep vacuum operation will void warranty.

7 - Shut off the nitrogen cylinder and remove the manifold gauge hose from the cylinder. Open the manifold gauge valves to release the nitrogen from the line set and indoor unit.

8 - Reconnect the manifold gauge to the vacuum pump, turn the pump on, and continue to evacuate the line set and indoor unit until the absolute pressure does not rise above 500 microns (29.9 inches of mercury) within a 20-minute period after shutting off the vacuum pump and closing the manifold gauge valves.

9 - When the absolute pressure requirement above has been met, disconnect the manifold hose from the vacuum pump and connect it to an upright cylinder of R-410A refrigerant. Open the manifold gauge valves to break the vacuum from 1 to 2 psig positive pressure in the line set and indoor unit. Close manifold gauge valves and shut off the R-410A cylinder and remove the manifold gauge set.

C - Charging *-1 units and 030 through 060 -2*

Polyol Ester Oil

⚠ IMPORTANT

Mineral oils are not compatible with R-410A. If oil must be added, it must be a polyol ester oil.

The compressor is charged with sufficient polyol ester oil. If oil must be added to the compressor in the field, Copeland has approved *Mobil EAL™ Arctic 22CC* and *ICI EMKARATE ™ RL32CF*.

This system uses R-410A refrigerant which operates at much higher pressures than HCFC-22. The provided liquid line filter drier is approved for use with R-410A. Do not replace it with components designed for use with HCFC-22. This unit is NOT approved for use with coils which use capillary tubes as a refrigerant metering device.

Factory Charge

Units are factory-charged with the amount of R-410A refrigerant indicated on the unit rating plate. This charge is based on a matching indoor coil and outdoor coil with 15 ft. (4.6 m) line set. For varying lengths of line set, refer to table 2 for refrigerant charge adjustment.

TABLE 2

Liquid Line Set Diameter	Ounces per 5 feet (g per 1.5 m) adjust from 15 feet (4.6 m) line set*
3/8 in. (9.5 mm)	3 ounce per 5 ft. (85 g per 1.5 m)
*NOTE - *If line length is greater than 15 ft. (4.6 m), add this amount. If line length is less than 15 ft. (4.6 m), subtract this amount.*	

Units Delivered Void of Charge

If the system is void of refrigerant, clean the system using the procedure described below.

1. Use nitrogen to pressurize the system and check for leaks. Repair leaks, if possible.
2. Evacuate the system to remove as much of the moisture as possible.
3. Use nitrogen to break the vacuum and install the provided filter drier in the system.
4. Evacuate the system again. Then, weigh the appropriate amount of R-410A refrigerant (listed on unit nameplate) into the system.
5. Monitor the system to determine the amount of moisture remaining in the oil. Use test kit 10N46 to verify that the moisture content is within the kit's dry color range. It may be necessary to replace the filter drier several times to achieve the required dryness level. **If system dryness is not verified, the compressor will fail in the future.**

Pre-charge Airflow Check of Temperature Drop across Evaporator Coil (Delta-T)

NOTE - Be sure that filters and indoor and outdoor coils are clean before testing

Measure the entering air dry bulb (DB) and wet bulb (WB) temperatures at the indoor coil. Find Delta-T in table 3. Measure evaporator coil's leaving air DB and subtract that value from the entering air DB. The measured difference should be within ±3ºF (±1.8ºC) of table value. If Delta-T is too low, decrease the indoor fan speed (refer to indoor unit for information). If the Delta-T is high, increase the indoor fan speed. Repeat charging procedure and Delta-T (air flow adjustment) procedure until both are correct.

Example:

Assume entering air DB - 72, WB - 64, leaving DB - 53. Delta-T should be 15 (per table); delta across coil is 19 (72 minus 53) which is 4ºF higher than table value; therefore, increase fan speed.

TABLE 3

Dry bulb temperature of air entering indoor coil															
80	***24***	***24***	***24***	***23***	***23***	***22***	***22***	***22***	***20***	***19***	***18***	***17***	***16***	***15***
78	***23***	***23***	***23***	***22***	***22***	***21***	***21***	***20***	***19***	***18***	***17***	***16***	***15***	***14***
76	***22***	***22***	***22***	***21***	***21***	***20***	***19***	***19***	***18***	***17***	***16***	***15***	***14***	***13***
74	***21***	***21***	***21***	***20***	***19***	***19***	***18***	***17***	***16***	***16***	***15***	***14***	***13***	***12***
72	***20***	***20***	***19***	***18***	***17***	***17***	***16***	***15***	***15***	***14***	***13***	***12***	***11***	***10***
70	***19***	***19***	***18***	***18***	***17***	***17***	***16***	***15***	***15***	***14***	***13***	***12***	***11***	***10***
	57	58	59	60	61	62	63	64	65	66	67	68	69	70
Wet bulb temperature of air entering indoor coil														

START: Determine how refrigerant is metered

WHEN TO CHARGE?

- Warm weather best
- Can charge in colder weather

CHARGE METHOD? Determine by:

- Metering device type
- Outdoor ambient temperature

REQUIREMENTS:

- Sufficient heat load in structure
- Indoor temperature between 70-80ºF (21-26ºC)
- Manifold gauge set connected to unit
- Thermometers:
  - to measure outdoor ambient temperature
  - to measure liquid line temperature
  - to measure vapor line temperature

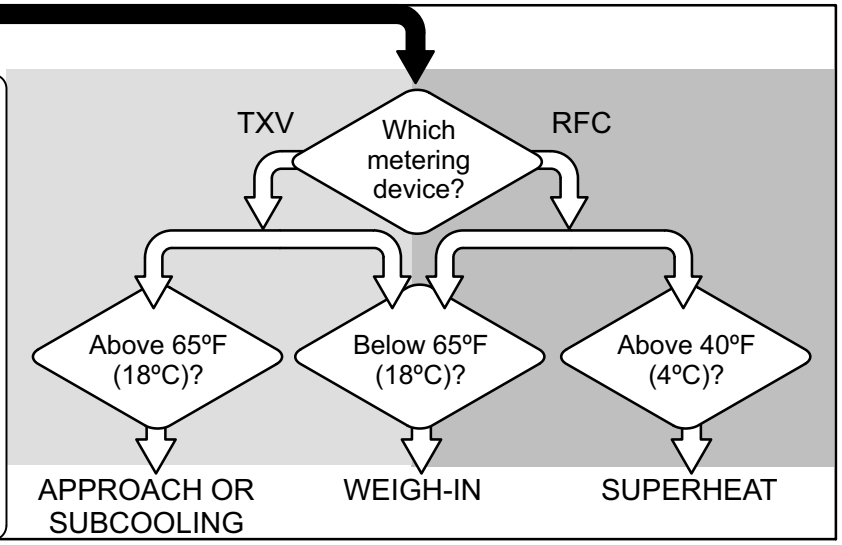

FIGURE 13 When to charge, method to use, conditions & equipment required

⚠ IMPORTANT **Before attempting to charge any system, confirm proper airflow across the indoor coil. Airflow over the indoor coil can be determined by measuring the static pressure drop across the coil and comparing it with the factory table provided in the indoor coil installation instructions.**

START: Measure outdoor ambient temperature

Outdoor ambient 40ºF (4ºC)?

ABOVE

- ❑ Check Liquid and Vapor line pressures
- ❑ Compare unit pressures with Normal Operating Pressures table 4, page 15.

(Table 4 is a general guide. Expect minor pressures variations. Significant differences may mean improper charge or other system problem.)

- ❑ Use SUPERHEAT to correctly charge unit or to verify the charge is correct.

BELOW

USE WEIGH-IN METHOD

Weigh-in or remove refrigerant based upon line length

SUPERHEAT RFC

If refrigerant added or removed, retest to confirm that unit is properly charged

If value is greater than shown, add refrigerant; if less than shown, remove refrigerant.

NOTE - Do not attempt to charge system where a dash appears, system could be overcharged. Superheat is taken at vapor line service port. Vapor line superheat must never be less than 5ºF at the vapor line service port.

SHº (Superheat) Values (+/-5ºF)

	Wet Bulb (air entering indoor coil)													
ºF*	**50**	**52**	**54**	**56**	**58**	**60**	**62**	**64**	**66**	**68**	**70**	**72**	**74**	**76**
40	15	18	20	23	26	29	32	34	38	41	43	46	48	51
45	13	16	18	21	24	27	30	33	36	39	41	44	46	49
50	11	14	16	19	22	25	28	31	34	37	39	42	44	47
55	9	12	14	17	20	23	27	30	33	36	38	40	42	44
60	7	10	12	15	18	21	24	27	30	33	35	38	40	43
65	-	6	10	13	16	19	21	24	27	30	33	36	38	41
70	-	-	7	10	13	16	19	21	24	27	30	33	36	39
75	-	-	-	6	9	12	15	18	21	24	28	31	34	37
80	-	-	-	-	5	8	12	15	18	21	25	28	31	35
85	-	-	-	-	-	-	8	11	15	19	22	26	30	33
90	-	-	-	-	-	-	5	9	13	16	20	24	27	31
95	-	-	-	-	-	-	-	6	10	14	18	22	25	29
100	-	-	-	-	-	-	-	-	8	12	16	21	24	28
105	-	-	-	-	-	-	-	-	5	9	13	17	22	26
110	-	-	-	-	-	-	-	-	-	6	11	15	20	25
115	-	-	-	-	-	-	-	-	-	-	8	14	18	24

* Dry-bulb temperature (ºF) of entering outdoor ambient air.

SUPERHEAT METHOD

- ❑ Set thermostat to call for heat (must have a cooling load between 70-80ºF (21-26ºC)
- ❑ Connect gauge set
- ❑ When heat demand is satisfied, set thermostat to call for cooling
- ❑ Allow temperatures and pressures to stabilize
- ❑ Record vapor line pressure; use value to determine saturation temperature (table 5 on page 15) SATº = _____
- ❑ Record vapor line temperature VAPº = _____
- ❑ Subtract to determine superheat (SHº):
- ❑ VAPº___ - SATº ____ = SHº _____
- ❑ Record the wet bulb temperature (air entering indoor coil) WB = _____
- ❑ Record outdoor ambient temperature
- ❑ Compare results with table

FIGURE 14 Charging RFC units with Superheat Method

START: Measure outdoor ambient temperature

Above or below 65ºF (18ºC)?

ABOVE

- ❑ Check Liquid and Vapor line pressures
- ❑ Compare unit pressures with Normal Operating Pressures table 4, page 15.

(Table 4 is a general guide. Expect minor pressures variations. Significant differences may mean improper charge or other system problem.)

- ❑ Use APPROACH to correctly charge unit or to verify the charge is correct.

BELOW

USE WEIGH-IN METHOD

Weigh-in or remove refrigerant based upon line length

APPROACH TXV

APPROACH METHOD

- ❑ Set thermostat to call for heat (must have a cooling load between 70-80ºF (21-26ºC)
- ❑ Connect gauge set
- ❑ When heat demand is satisfied, set thermostat to call for cooling
- ❑ Allow temperatures and pressures to stabilize
- ❑ Record outdoor ambient temperature AMBº = _____
- ❑ Record line temp. LIQº = _____
- ❑ Subtract to determine approach (APPº):
- ❑ LIQº____ - AMBº ____ = APPº _____
- ❑ Compare results with table

If value is greater than shown (high approach), add refrigerant; if less than shown (liquid temp too close to ambient temp, low approach), remove refrigerant.

If refrigerant added or removed, retest to confirm that unit is properly charged

APPº (Approach) Values(F:+/-1.0°; [C: +/-0.5°])

ºF (ºC)*	-018	-024	-030	-036	-042	-048	-060
65 (18)	3 (1.7)	5 (2.8)	4 (2.2)	5 (2.8)	6 (3.3)	7 (3.9)	8 (4.4)
75 (24)	5 (2.8)	6 (3.3)	5 (2.8)	5 (2.8)	8 (4.4)	8 (4.4)	9 (5.0)
85 (29)	6 (3.3)	6 (3.3)	6 (3.3)	6 (3.3)	8 (4.4)	8 (4.4)	9 (5.0)
95 (35)	6 (3.3)	7 (3.9)	6 (3.3)	6 (3.3)	8 (4.4)	8 (4.4)	9 (5.0)
105 (41)	6 (3.3)	6 (3.3)	6 (3.3)	5 (2.8)	8 (4.4)	8 (4.4)	9 (5.0)
115 (45)	6 (3.3)	6 (3.3)	6 (3.3)	6 (3.3)	8 (4.4)	9 (5.0)	9 (5.0)

*Temperature of air entering outdoor coil

FIGURE 15 Charging TXV units with Approach Method

START: Measure outdoor ambient temperature

Above or below 65ºF (18ºC)?

ABOVE

- ❑ Check Liquid and Vapor line pressures
- ❑ Compare unit pressures with Normal Operating Pressures table 4, page 15.

(Table 4 is a general guide. Expect minor pressures variations. Significant differences may mean improper charge or other system problem.)

- ❑ Use SUBCOOLING to correctly charge unit or to verify the charge is correct.

BELOW

USE WEIGH-IN METHOD

Weigh-in or remove refrigerant based upon line length

SUBCOOLING TXV

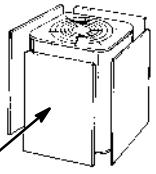

BLOCK OUTDOOR COIL [sometimes necessary with lower temperatures] Use cardboard or plastic sheet to restrict the airflow through the outdoor coil to achieve pressures from 325-375 psig (2240-2585 kPa). Higher pressures are needed to check charge. Block equal sections of air intake panels and move coverings sideways until the liquid pressure is in the above noted ranges.

SUBCOOLING METHOD

- ❑ Set thermostat to call for heat (must have a cooling load between 70-80ºF (21-26ºC)
- ❑ Connect gauge set
- ❑ Measure outdoor ambient temperature
- ❑ When heat demand is satisfied, set thermostat to call for cooling
- ❑ Allow temperatures and pressures to stabilize [NOTE - IF NECESSARY, block outdoor coil to maintain 325 - 375 psig]
- ❑ Record line temp. LIQº = _____
- ❑ Record liquid line pressure; use value to determine saturation temperature (table 5 on page 15) SATº = _____
- ❑ Subtract to determine subcooling (SCº):
- ❑ SATº___ - LIQº _____ = SCº _____
- ❑ Compare results with table

If refrigerant added or removed, verify charge using the approach method

If value is greater than shown, remove refrigerant; if less than shown, add refrigerant

SCº (Subcooling) Values (F:+/-1.0°; [C: +/-0.5°])

ºF (ºC)*	-018	-024	-030	-036	-042	-048	-060
65 (18)	10 (5.6)	10 (5.6)	10 (5.6)	11 (6.1)	10 (5.6)	8 (4.4)	8 (4.4)
75 (24)	6 (3.3)	8 (4.4)	8 (4.4)	11 (6.1)	7 (3.9)	8 (4.4)	7 (3.9)
85 (29)	6 (3.3)	8 (4.4)	7 (3.9)	11 (6.1)	7 (3.9)	8 (4.4)	8 (4.4)
95 (35)	6 (3.3)	8 (4.4)	7 (3.9)	10 (5.6)	7 (3.9)	8 (4.4)	7 (3.9)
105 (41)	6 (3.3)	8 (4.4)	7 (3.9)	10 (5.6)	7 (3.9)	8 (4.4)	7 (3.9)
115 (45)	6 (3.3)	8 (4.4)	6 (3.3)	9 (5.0)	7 (3.9)	7 (3.9)	6 (3.3)

*Temperature of air entering outdoor coil

FIGURE 16 Charging TXV units with Subcooling Method

TABLE 4 Normal Operating Pressures

⚠ IMPORTANT **Use this table to perform maintenance checks; it is not a procedure for charging the system. Minor variations in these pressures may be due to differences in installations. Significant deviations could mean that the system is not properly charged or that a problem exists with some component in the system.**

Model	-018	-024	-030	-036	-042	-048	-060
**Temp. °F (°C)	*Liquid Line Pressure / Vapor Line Pressure						
	Liquid / Vapor	Liquid / Vapor	Liquid / Vapor	Liquid / Vapor	Liquid / Vapor	Liquid / Vapor	Liquid / Vapor
Expansion Valve (TXV)							
65 (18)	222 / 140	233 / 138	230 / 136	240 / 137	236 / 138	238 / 136	239 / 133
70 (21)	241 / 141	250 / 138	247 / 137	259 / 138	253 / 140	256 / 138	258 / 135
75 (24)	259 / 143	271 / 140	265 / 139	278 / 139	273 / 141	277 / 139	278 / 136
80 (27)	279 / 144	291 / 141	287 / 140	299 / 139	296 / 142	299 / 140	300 / 137
85 (29)	301 / 145	313 / 143	308 / 141	321 / 140	318 / 143	320 / 139	323 / 138
90 (32)	319 / 145	335 / 143	331 / 142	344 / 141	341 / 144	343 / 140	346 / 139
95 (35)	346 / 146	361 / 145	355 / 144	368 / 142	366 / 146	369 / 141	370 / 140
100 (38)	370 / 147	384 / 146	380 / 145	393 / 143	392 / 147	395 / 142	396 / 142
105 (41)	396 / 148	412 / 147	405 / 146	419 / 144	417 / 148	422 / 144	415 / 143
110 (43)	422 / 150	436 / 148	432 / 147	446 / 145	445 / 149	450 / 146	449 / 145
115 (45)	451 / 151	468 / 149	461 / 148	477 / 146	475 / 151	481 / 148	476 / 147
Fixed Orifice (RFC)							
65 (18)	223 / 123	230 / 121	231 / 123	234 / 130	248 / 135	240 / 126	244 / 125
70 (21)	239 / 127	251 / 128	249 / 127	247 / 134	266 / 138	260 / 129	263 / 128
75 (24)	253 / 131	272 / 133	270 / 132	270 / 136	285 / 141	281 / 133	281 / 131
80 (27)	278 / 136	289 / 135	291 / 136	290 / 138	305 / 143	301 / 135	303 / 134
85 (29)	299 / 139	312 / 140	314 / 140	313 / 141	327 / 145	324 / 138	324 / 136
90 (32)	320 / 142	335 / 142	337 / 142	336 / 143	349 / 147	346 / 140	347 / 139
95 (35)	343 / 145	361 / 144	359 / 144	358 / 145	372 / 149	371 / 142	370 / 141
100 (38)	367 / 147	383 / 147	383 / 146	361 / 148	396 / 150	395 / 144	394 / 143
105 (41)	392 / 149	409 / 149	408 / 147	409 / 150	421 / 152	420 / 146	418 / 145
110 (43)	417 / 152	441 / 151	433 / 149	430 / 151	447 / 153	447 / 148	444 / 146
115 (46)	445 / 154	467 / 152	467 / 151	463 / 152	476 / 154	473 / 150	471 / 147

**Values shown are typical pressures; indoor unit match up, indoor air quality equipment, and indoor load will cause the pressures to vary.*
***Temperature of the air entering the outside coil.*

TABLE 5 HFC-410A Temperature (°F) - Pressure (Psig)

°F	Psig	°F	Psig	°F	Psig	°F	Psig	°F	Psig	°F	Psig	°F	Psig	°F	Psig
32	100.8	48	137.1	63	178.5	79	231.6	94	290.8	110	365.0	125	445.9	141	545.6
33	102.9	49	139.6	64	181.6	80	235.3	95	295.1	111	370.0	126	451.8	142	552.3
34	105.0	50	142.2	65	184.3	81	239.0	96	299.4	112	375.1	127	457.6	143	559.1
35	107.1	51	144.8	66	187.7	82	242.7	97	303.8	113	380.2	128	463.5	144	565.9
36	109.2	52	147.4	67	190.9	83	246.5	98	308.2	114	385.4	129	469.5	145	572.8
37	111.4	53	150.1	68	194.1	84	250.3	99	312.7	115	390.7	130	475.6	146	579.8
38	113.6	54	152.8	69	197.3	85	254.1	100	317.2	116	396.0	131	481.6	147	586.8
39	115.8	55	155.5	70	200.6	86	258.0	101	321.8	117	401.3	132	487.8	148	593.8
40	118.0	56	158.2	71	203.9	87	262.0	102	326.4	118	406.7	133	494.0	149	601.0
41	120.3	57	161.0	72	207.2	88	266.0	103	331.0	119	412.2	134	500.2	150	608.1
42	122.6	58	163.9	73	210.6	89	270.0	104	335.7	120	417.7	135	506.5	151	615.4
43	125.0	59	166.7	74	214.0	90	274.1	105	340.5	121	423.2	136	512.9	152	622.7
44	127.3	60	169.6	75	217.4	91	278.2	106	345.3	122	428.8	137	519.3	153	630.1
45	129.7	61	172.6	76	220.9	92	282.3	107	350.1	123	434.5	138	525.8	154	637.5
46	132.2	62	175.4	77	224.4	93	286.5	108	355.0	124	440.2	139	532.4	155	645.0
47	134.6			78	228.0			109	360.0			140	539.0		

D - Charging *018, 024 -2 units & 030 through 060 -3 units*

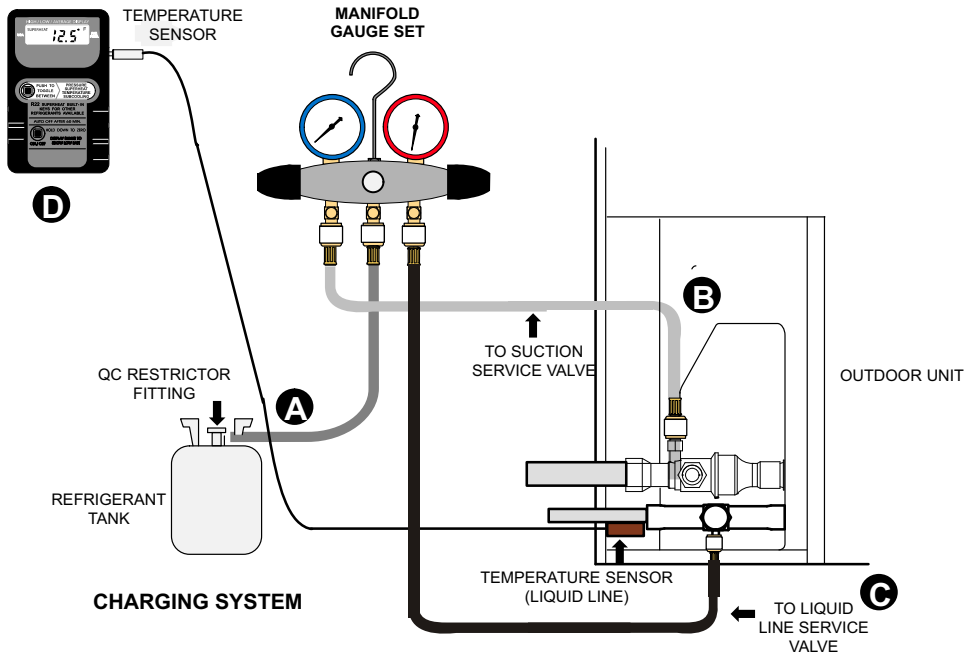

A Close manifold gauge set valves and connect the center hose to an upright cylinder of R-410A.
B Connect the manifold gauge set's low pressure side to the suction line service port.
C Connect the manifold gauge set's high pressure side to the liquid line service port.
D Position temperature sensor on liquid line near liquid line service port.

FIGURE 17

INDOOR COIL AIRFLOW CHECK

Temp. of air entering indoor coil ºF (Dry-bulb)	DT													
80	24	24	24	23	23	22	22	22	20	19	18	17	16	15
78	23	23	23	22	22	21	21	20	19	18	17	16	15	14
76	22	22	22	21	21	20	19	19	18	17	16	15	14	13
74	21	21	21	20	19	19	18	17	16	16	15	14	13	12
72	20	20	19	18	17	17	16	15	15	14	13	12	11	10
70	19	19	18	18	17	17	16	15	15	14	13	12	11	10
Wet-bulb ºF	57	58	59	60	61	62	63	64	65	66	67	68	69	70

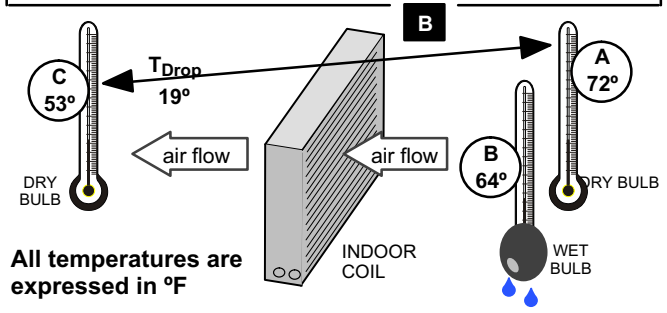

1. Determine the desired DT—Measure entering air temperature using dry bulb (**A**) and wet bulb (**B**). **DT** is the intersecting value of **A** and **B** in the table (see triangle).

2. Find temperature drop across coil—Measure the coil's dry bulb entering and leaving air temperatures (**A** and **C**). Temperature Drop Formula: (T_{Drop}) = **A** minus **C**.

3. Determine if fan needs adjustment—If the difference between the measured T_{Drop} and the desired **DT** (T_{Drop}–**DT**) is within ±3º, no adjustment is needed. See examples: Assume **DT** = 15 and **A** temp. = 72º, these **C** temperatures would necessitate stated actions:

Cº	T_{Drop}	–	DT	=	ºF	*ACTION*
53º	19	–	15	=	4	*Increase the airflow*
58º	14	–	15	=	-1	*(within ±3º range) no change*
62º	10	–	15	=	-5	*Decrease the airflow*

4. Adjust the fan speed—See indoor unit instructions to increase/decrease fan speed.

Changing air flow affects all temperatures; recheck temperatures to confirm that the temperature drop and DT are within ±3º.

Check indoor coil airflow using the Delta-T (DT) process as illustrated.

FIGURE 18

DETERMINING CHARGE METHOD

START: Determine how refrigerant is metered

WHEN TO CHARGE?

- Warm weather best
- Can charge in colder weather

CHARGE METHOD? Determine by:

- Metering device type
- Outdoor ambient temperature

REQUIREMENTS:

- Sufficient heat load in structure
- Indoor temperature between 70-80ºF (21-26ºC)
- Manifold gauge set connected to unit
- Thermometers:
  - to measure outdoor ambient temperature
  - to measure liquid line temperature
  - to measure suction line temperature

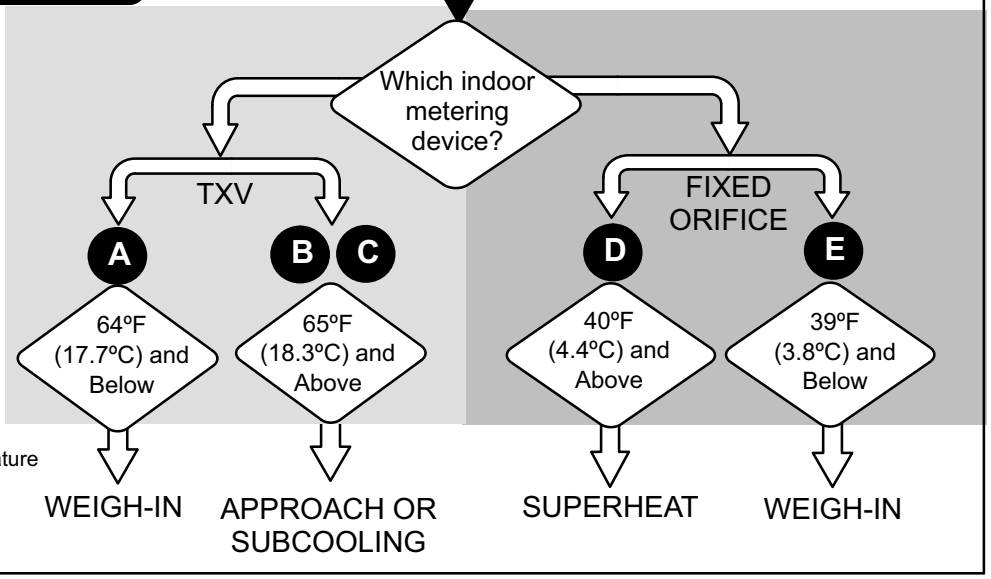

FIGURE 19

START: Measure outdoor ambient temperature

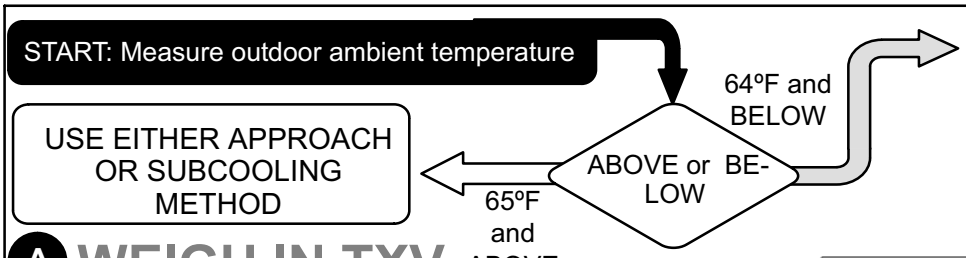

A **WEIGH IN TXV**

1.. Connect gauge set as illustrated in figure 17.
2.. Check Liquid and suction line pressures
3.. Compare unit pressures with table 6, *Normal Operating Pressures*.
4.. Weigh in the unit nameplate charge plus any charge required for line set differences over feet.

This nameplate is for illustration purposes only. Go to actual nameplate on outdoor unit for charge information.

Once refrigerant charge is correct, disconnect gauge set and replace service port caps.

Refrigerant Charge per Line Set Length

Liquid Line Set Diameter	Ounces per 5 feet (g per 1.5 m) adjust from 15 feet (4.6 m) line set*
3/8” (9.5 mm)	3 ounce per 5’ (85 g per 1.5 m)

*NOTE - *If line length is greater than 15 ft. (4.6 m), add this amount. If line length is less than 15 ft. (4.6 m), subtract this amount.*

FIGURE 20

START: Measure outdoor ambient temperature

65ºF and ABOVE

ABOVE or BELOW

64ºF and BELOW

USE WEIGH-IN METHOD
Weigh-in or remove refrigerant based upon line length

B APPROACH TXV

1.. Connect gauge set as illustrated in figure 17.
2.. Confirm proper airflow across coil using figure 18.
3.. Compare unit pressures with table 6, *Normal Operating Pressures*.
4.. Set thermostat to call for heat (must have a cooling load between 70-80ºF (21-26ºC).
5.. When heat demand is satisfied, set thermostat to call for cooling.
6.. Allow temperatures and pressures to stabilize.
7.. Record outdoor ambient temperature:
AMBº =_____
8.. Record liquid line temperature:
LIQº = _____
9.. Subtract to determine approach (APPº):
LIQº_____ - AMBº _____ = APPº_____
10.. Compare results with table below.

APPº (Approach) Values(F:+/-1.0° [C: +/-0.6°])

ºF (ºC)*	-018	-024	-030	-036	-042	-048	-060
65 (18)	4 (2.2)	2 (1.1)	2 (1.1)	2 (1.1	6 (3.3)	7 (3.9)	8 (4.4)
75 (24)	5 (2.8)	4 (2.2)	4 (2.2)	5 (2.8)	8 (4.4)	8 (4.4)	9 (5.0)
85 (29)	6 (3.3)	4 (2.2)	6 (3.3)	8 (4.4)	8 (4.4)	8 (4.4)	9 (5.0)
95 (35)	5 (2.8)	4 (2.2)	5 (2.8)	7 (3.9)	8 (4.4)	8 (4.4)	9 (5.0)
105 (41)	3 (1.7)	4 (2.2)	5 (2.8)	6 (3.3)	8 (4.4)	8 (4.4)	9 (5.0)
115 (45)	3 (1.7)	3 (1.7)	4 (2.2)	6 (3.3)	8 (4.4)	9 (5.0)	9 (5.0)

*Temperature of air entering outdoor coil

MORE or LESS

If value is **MORE** than shown, remove refrigerant.

If value is **LESS** than shown, add refrigerant.

If refrigerant is added or removed, verify charge using the **Subcooling Method**.

Once refrigerant charge is correct, disconnect gauge set and replace service port caps.

FIGURE 21

START: Measure outdoor ambient temperature

65ºF and ABOVE

ABOVE or BELOW

64ºF and BELOW

USE WEIGH-IN METHOD
Weigh-in or remove refrigerant based upon line length

C SUBCOOLING TXV

BLOCK OUTDOOR COIL: [sometimes necessary with lower temperatures] Use cardboard or plastic sheet to restrict the airflow through the outdoor coil to achieve pressures from 325-375 psig (2240-2585 kPa). Higher pressures are needed to check charge. Block equal sections of air intake panels and move coverings sideways until the liquid pressure is in the above noted ranges.

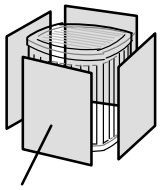

CARDBOARD OR PLASTIC SHEETS

1.. Connect gauge set as illustrated in figure 17.
2.. Confirm proper airflow across coil using figure 18.
3.. Compare unit pressures with table 6, *Normal Operating Pressures*.
4.. Set thermostat to call for heat (must have a cooling load between 70-80ºF (21-26ºC)
5.. Measure outdoor ambient temperature
6.. When heat demand is satisfied, set thermostat to call for cooling
7.. Allow temperatures and pressures to stabilize.
NOTE - If necessary, block outdoor coil to maintain 325 - 375 psig.
8.. Record liquid line temperature:
LIQº = _____
9.. Measure liquid line pressure and use the value to determine saturation temperature (see table 5):
SATº = _____
10.. Subtract to determine subcooling (SCº):
SATº_____ - LIQº _____ = SCº _____
11.. Compare results with table below.

SCº (Subcooling) Values (F:+/-1.0° [C: +/-0.6°])

ºF (ºC)*	-018	-024	-030	-036	-042	-048	-060
65 (18)	10 (5.6)	10 (5.6)	11 (6.1)	13 (7.2)	10 (5.6)	8 (4.4)	8 (4.4)
75 (24)	6 (3.3)	7 (3.9)	8 (4.4)	9 (5.0)	7 (3.9)	8 (4.4)	7 (3.9)
85 (29)	6 (3.3)	8 (4.4)	6 (3.3)	7 (3.9)	7 (3.9)	8 (4.4)	8 (4.4)
95 (35)	6 (3.3)	9 (5.0)	6 (3.3)	8 (4.4)	7 (3.9)	8 (4.4)	7 (3.9)
105 (41)	10 (5.6)	9 (5.0)	7 (3.9)	9 (5.0)	7 (3.9)	8 (4.4)	6 (3.3)
115 (45)	10 (5.6)	10 (5.6)	8 (4.4)	10 (5.6)	7 (3.9)	7 (3.9)	6 (3.3)

*Temperature of air entering outdoor coil

MORE or LESS

If value is **MORE** than shown, remove refrigerant.

If value is **LESS** than shown, add refrigerant.

If refrigerant is added or removed, verify charge using the **Approach Method**.

Once refrigerant charge is correct, disconnect gauge set and replace service port caps.

FIGURE 22

START: Measure outdoor ambient temperature

ABOVE or BELOW

39ºF and BELOW

USE SUPERHEAT

40ºF and ABOVE

1.. Connect gauge set as illustrated in figure 17.
2.. Check Liquid and suction line pressures
3.. Compare unit pressures with table 6, *Normal Operating Pressures*.
4.. Weigh in the unit nameplate charge plus any charge required for line set differences over feet.

D WEIGH IN FIXED ORIFICE

This nameplate is for illustration purposes only. Go to actual nameplate on outdoor unit for charge information.

Once refrigerant charge is correct, disconnect gauge set and replace service port caps.

Refrigerant Charge per Line Set Length

Liquid Line Set Diameter	Ounces per 5 feet (g per 1.5 m) adjust from 15 feet (4.6 m) line set*
3/8” (9.5 mm)	3 ounce per 5’ (85 g per 1.5 m)

*NOTE - *If line length is greater than 15 ft. (4.6 m), add this amount. If line length is less than 15 ft. (4.6 m), subtract this amount.*

FIGURE 23

START: Measure outdoor ambient temperature

ABOVE or BELOW

40ºF and ABOVE

USE WEIGH-IN METHOD
Weigh-in or remove refrigerant based upon line length

39ºF and BELOW

1.. Connect gauge set as illustrated in figure 17.
2.. Confirm proper airflow across coil using figure 18.
3.. Compare unit pressures with table 6, *Normal Operating Pressures*.
4.. Set thermostat to call for heat (must have a cooling load between 70-80ºF (21-26ºC)
5.. When heat demand is satisfied, set thermostat to call for cooling.
6.. Allow temperatures and pressures to stabilize.
7.. Measure the suction line pressure and use the use value to determine saturation temperature (table 5):
SATº =_____
8.. Record suction line temperature:
VAPº =_____
9.. Subtract to determine superheat (SHº):
VAPº - _____ SATº _____ = SHº_____
10.. Record the wet bulb temperature (air entering indoor coil):
WB =_____
11.. Record outdoor ambient temperature.
12.. Compare results with table to the left.

E SUPERHEAT FIXED ORIFICE

SHº (Superheat) Values (+/-5ºF)

	Wet Bulb (air entering indoor coil)													
ºF*	**50**	**52**	**54**	**56**	**58**	**60**	**62**	**64**	**66**	**68**	**70**	**72**	**74**	**76**
40	15	18	20	23	26	29	32	34	38	41	43	46	48	51
45	13	16	18	21	24	27	30	33	36	39	41	44	46	49
50	11	14	16	19	22	25	28	31	34	37	39	42	44	47
55	9	12	14	17	20	23	27	30	33	36	38	40	42	44
60	7	10	12	15	18	21	24	27	30	33	35	38	40	43
65	-	6	10	13	16	19	21	24	27	30	33	36	38	41
70	-	-	7	10	13	16	19	21	24	27	30	33	36	39
75	-	-	-	6	9	12	15	18	21	24	28	31	34	37
80	-	-	-	-	5	8	12	15	18	21	25	28	31	35
85	-	-	-	-	-	-	8	11	15	19	22	26	30	33
90	-	-	-	-	-	-	5	9	13	16	20	24	27	31
95	-	-	-	-	-	-	-	6	10	14	18	22	25	29
100	-	-	-	-	-	-	-	-	8	12	16	21	24	28
105	-	-	-	-	-	-	-	-	5	9	13	17	22	26
110	-	-	-	-	-	-	-	-	-	6	11	15	20	25
115	-	-	-	-	-	-	-	-	-	-	8	14	18	24

* Dry-bulb temperature (ºF) of entering outdoor ambient air.

NOTE - Do not attempt to charge system where a dash appears, system could be overcharged. Superheat is taken at suction line service port. Suction line superheat must never be less than 5ºF at the suction line service port.

Once refrigerant charge is correct, disconnect gauge set and replace service port caps.

If refrigerant is added, retest to confirm that unit is properly charged.

If value is **LESS** than shown, add refrigerant.

MORE or **LESS**

If value is **MORE** than shown, remove refrigerant.

If refrigerant is removed, retest to confirm that unit is properly charged.

Once refrigerant charge is correct, disconnect gauge set and replace service port caps.

FIGURE 24

TABLE 6
Normal Operating Pressures (Liquid +10 and Suction +5 psig)

⚠ IMPORTANT	Use this table to perform maintenance checks; it is not a procedure for charging the system. Minor variations in these pressures may be due to differences in installations. Significant deviations could mean that the system is not properly charged or that a problem exists with some component in the system.

Model	-018	-024	-030	-036	-042	-048	-060
**Temp. °F (°C)	Liquid / Vapor	Liquid / Suction	Liquid / Suction	Liquid / Suction	Liquid / Vapor	Liquid / Vapor	Liquid / Vapor
Expansion Valve (TXV)							
65 (18)	230 / 138	225 / 135	226 / 129	238 / 132	236 / 138	238 / 136	239 / 133
70 (21)	244 / 139	242 / 137	241 / 131	254 / 135	253 / 140	256 / 138	258 / 135
75 (24)	265 / 140	260 / 138	259 / 134	273 / 138	273 / 141	277 / 139	278 / 136
80 (27)	286 / 140	282 / 140	281 / 138	293 / 140	296 / 142	299 / 140	300 / 137
85 (29)	307 / 142	304 / 141	301 / 140	316 / 142	318 / 143	320 / 139	323 / 138
90 (32)	330 / 143	326 / 142	324 / 141	340 / 143	341 / 144	343 / 140	346 / 139
95 (35)	351 / 144	351 / 142	348 / 142	366 / 144	366 / 146	369 / 141	370 / 140
100 (38)	380 / 144	376 / 144	372 / 143	392 / 145	392 / 147	395 / 142	396 / 142
105 (41)	407 / 145	403 / 145	399 / 144	420 / 147	417 / 148	422 / 144	415 / 143
110 (43)	436 / 146	433 / 145	428 / 145	449 / 148	445 / 149	450 / 146	449 / 145
115 (45)	466 / 147	463 / 147	456 / 146	480 / 149	475 / 151	481 / 148	476 / 147
Fixed Orifice (RFC)							
65 (18)	232 / 124	228 / 125	229 / 128	241 / 131	248 / 135	240 / 126	244 / 125
70 (21)	248 / 127	244 / 127	243 / 129	258 / 134	266 / 138	260 / 129	263 / 128
75 (24)	267 / 131	261 / 131	261 / 132	277 / 136	285 / 141	281 / 133	281 / 131
80 (27)	286 / 135	284 / 134	284 / 135	298 / 139	305 / 143	301 / 135	303 / 134
85 (29)	307 / 138	303 / 137	305 / 138	321 / 141	327 / 145	324 / 138	324 / 136
90 (32)	328 / 141	325 / 140	327 / 140	342 / 143	349 / 147	346 / 140	347 / 139
95 (35)	351 / 143	347 / 142	349 / 142	366 / 145	372 / 149	371 / 142	370 / 141
100 (38)	375 / 146	370 / 144	372 / 144	392 / 147	396 / 150	395 / 144	394 / 143
105 (41)	400 / 148	394 / 146	396 / 146	416 / 149	421 / 152	420 / 146	418 / 145
110 (43)	426 / 150	420 / 148	422 / 148	446 / 151	447 / 153	447 / 148	444 / 146
115 (46)	457 / 153	447 / 150	449 / 150	480 / 152	476 / 154	473 / 150	471 / 147

**Values shown are typical pressures; indoor unit match up, indoor air quality equipment, and indoor load will cause the pressures to vary.*
***Temperature of the air entering the outside coil.*

TABLE 7
HFC-410A Temperature (°F) - Pressure (Psig)

°F	Psig	°F	Psig	°F	Psig	°F	Psig	°F	Psig	°F	Psig	°F	Psig	°F	Psig
32	100.8	48	137.1	63	178.5	79	231.6	94	290.8	110	365.0	125	445.9	141	545.6
33	102.9	49	139.6	64	181.6	80	235.3	95	295.1	111	370.0	126	451.8	142	552.3
34	105.0	50	142.2	65	184.3	81	239.0	96	299.4	112	375.1	127	457.6	143	559.1
35	107.1	51	144.8	66	187.7	82	242.7	97	303.8	113	380.2	128	463.5	144	565.9
36	109.2	52	147.4	67	190.9	83	246.5	98	308.2	114	385.4	129	469.5	145	572.8
37	111.4	53	150.1	68	194.1	84	250.3	99	312.7	115	390.7	130	475.6	146	579.8
38	113.6	54	152.8	69	197.3	85	254.1	100	317.2	116	396.0	131	481.6	147	586.8
39	115.8	55	155.5	70	200.6	86	258.0	101	321.8	117	401.3	132	487.8	148	593.8
40	118.0	56	158.2	71	203.9	87	262.0	102	326.4	118	406.7	133	494.0	149	601.0
41	120.3	57	161.0	72	207.2	88	266.0	103	331.0	119	412.2	134	500.2	150	608.1
42	122.6	58	163.9	73	210.6	89	270.0	104	335.7	120	417.7	135	506.5	151	615.4
43	125.0	59	166.7	74	214.0	90	274.1	105	340.5	121	423.2	136	512.9	152	622.7
44	127.3	60	169.6	75	217.4	91	278.2	106	345.3	122	428.8	137	519.3	153	630.1
45	129.7	61	172.6	76	220.9	92	282.3	107	350.1	123	434.5	138	525.8	154	637.5
46	132.2	62	175.4	77	224.4	93	286.5	108	355.0	124	440.2	139	532.4	155	645.0
47	134.6			78	228.0			109	360.0			140	539.0		

V - SERVICE AND RECOVERY

⚠ WARNING

Polyol ester (POE) oils used with R-410A refrigerant absorb moisture very quickly. It is very important that the refrigerant system be kept closed as much as possible. DO NOT remove line set caps or service valve stub caps until you are ready to make connections.

⚠ IMPORTANT

USE RECOVERY MACHINE RATED FOR R-410A REFRIGERANT.

If the XC14 system must be opened for any kind of service, such as compressor or drier replacement, you must take extra precautions to prevent moisture from entering the system. The following steps will help to minimize the amount of moisture that enters the system during recovery of R-410A.

1 - Use a regulator-equipped nitrogen cylinder to break the system vacuum. Do not exceed 5 psi. The dry nitrogen will fill the system, purging any moisture.

2 - Remove the faulty component and quickly seal the system (using tape or some other means) to prevent additional moisture from entering the system.

3 - Do not remove the tape until you are ready to install new component. Quickly install the replacement component.

4 - Evacuate the system to remove any moisture and other non-condensables.

Any time the XC14 sealed system is opened, the drier must be replaced and the system must be evacuated.

Any moisture not absorbed by the polyol ester oil can be removed by evacuation. Moisture that has been absorbed by the compressor oil can be removed by replacing the drier.

⚠ IMPORTANT

Evacuation of system only will not remove moisture from oil. Drier must be replaced to eliminate moisture from POE oil.

VI - MAINTENANCE

⚠ WARNING

Electric shock hazard. Can cause injury or death. Before attempting to perform any service or maintenance, turn the electrical power to unit OFF at disconnect switch(es). Unit may have multiple power supplies.

At the beginning of each cooling season, the system should be serviced. In addition, the system should be cleaned as follows:

A - Outdoor Unit

1 - Clean and inspect the outdoor coil. The coil may be flushed with a water hose. Ensure the power is turned off before you clean the coil.

2 - Condenser fan motor is prelubricated and sealed. No further lubrication is needed.

3 - Visually inspect connecting lines and coils for evidence of oil leaks.

4 - Check wiring for loose connections.

5 - Check for correct voltage at unit (unit operating).

6 - Check amp-draw condenser fan motor.
Unit nameplate _____ Actual _____ .
NOTE - If owner complains of insufficient cooling, the unit should be gauged and refrigerant charge checked. Refer to section on refrigerant charging in this instruction.

B - Indoor Coil

1 - Clean coil, if necessary.

2 - Check connecting lines and coils for evidence of oil leaks.

3 - Check the condensate line and clean it if necessary.

C - Indoor Unit

1 - Clean or change filters.

2 - Adjust blower speed for cooling. Measure the pressure drop over the coil to determine the correct blower CFM. Refer to the unit information service manual for pressure drop tables and procedure.

3 - *Belt Drive Blowers* - Check belt for wear and proper tension.

4 - Check all wiring for loose connections

5 - Check for correct voltage at unit (blower operating).

6 - Check amp-draw on blower motor
Unit nameplate_____ Actual _____.

VII - WIRING DIAGRAMS AND SEQUENCE OF OPERATION

XC14

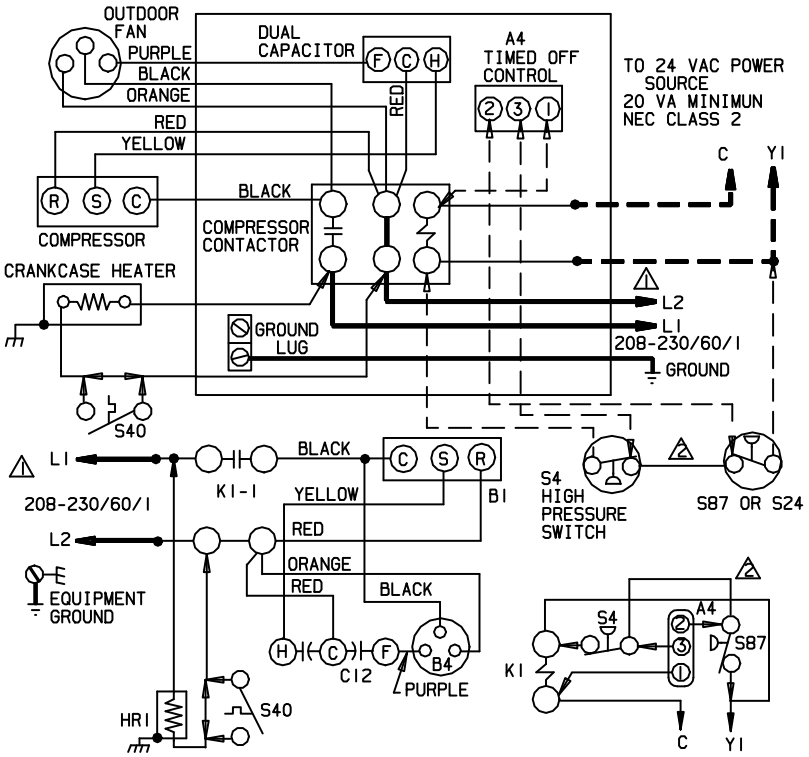

DESCRIPTION	
KEY	COMPONENT
A4	CONTROL-TIMED OFF
B1	COMPRESSOR
B4	MOTOR-OUTDOOR FAN
C12	CAPACITOR-DUAL
HR1	HEATER-COMPRESSOR
K1,-1	CONTACTOR-COMPRESSOR
S4	SWITCH-HIGH PRESSURE
S24	SWITCH-LOSS OF CHARGE
S40	THERMOSTAT-CRANKCASE
S87	SWITCH-LOW PRESS.COMP 1

⚠1 FOR USE WITH COPPER CONDUCTORS ONLY. REFER TO UNIT RATING PLATE FOR MINIMUM CIRCUIT AMPACITY AND MAXIMUM OVERCURRENT PROTECTION SIZE.

⚠2 JUMPER IS USED WHEN TOC IS NOT USED

WARNING- ELECTRIC SHOCK HAZARD, CAN CAUSE INJURY OR DEATH. UNIT MUST BE GROUNDED IN ACCORDANCE WITH NATIONAL AND LOCAL CODES.

LINE VOLTAGE FIELD INSTALLED
CLASS II VOLTAGE FIELD INSTALLED

← INDICATES OPTIONAL COMPONENTS

09/05	Supersedes Form No.
	New Form No. 534,773W

© 2005 Litho U.S.A.

NOTE- The thermostat used may be electromechanical or electronic.

NOTE- Transformer in indoor unit supplies power (24 VAC) to the thermostat and outdoor unit controls.

COOLING:

1- Cooling demand initiates at Y1 in the thermostat.

1 - - 24VAC from indoor unit (Y1) energizes the TOC timed off control (if used) , which energizes contactor K1.

2 - - K1-1 N.O. closes, energizing compressor (B1) and outdoor fan motor (B4).

4 - Compressor (B1) and outdoor fan motor (B4) begin immediate operation..

END OF COOLING DEMAND:

5- Cooling demand is satisfied. Terminal Y1 is de-energized.

6- Compressor contactor K1 is de-energized.

7- K1-1 opens and compressor (B1) and outdoor fan motor (B4) are de-energized and stop immediately.