MAKING MODERN LIVING POSSIBLE

Data sheet

Thermostatic valve
Type AVTA

Thermostatic valves are used for proportional regulation of flow quantity, depending on the setting and the sensor temperature.

The Danfoss range of thermostatic valves includes a series of products for both refrigeration and heating regulation.
The valves are self-acting, i.e. they operate without the supply of auxiliary energy such as electricity or compressed air.

The required temperature is maintained constant without unnecessary use of:
- cooling water in cooling systems,
- hot water or steam in heating systems.

The operating economy and-efficiency are maximized.

AVTA SS for aggressive media.
A valve body in stainless steel means that the valve can be used for aggressive media in such applications as the marine sector and the chemical industry.

Features

- Insensitive to dirt,
- Insensitive to water pressure,
- Needs no power supply – self acting,
- Opens on rising sensor temperature,
- Differential pressure: 0 – 145 psi,
- Maximum working pressure (MWP): 232 psi,
- Maximum test pressure: 365 psi,
- Maximum pressure on sensor: 365 psi,
- Stainless steel version available,
- The valves are pressure-relieved, i.e. the degree of opening is not affected by differential pressure Δp (pressure drop),
- The regulation range is defined for the point at which the valve begins to open,
- Cooling media temperature range: -13 – 266 °F
- Ethylene glycol as a cooling media up to 40%.

© Danfoss A /S (AC-MCI / jmn), 2013-11

How it works

Thermostatic valves consist of three main elements:

1. Setting section with knob, reference spring and setting scale.
2. Valve body with orifice, closing cone and sealing elements.
3. Hermetically sealed thermostatic element with sensor, bellows and charge.

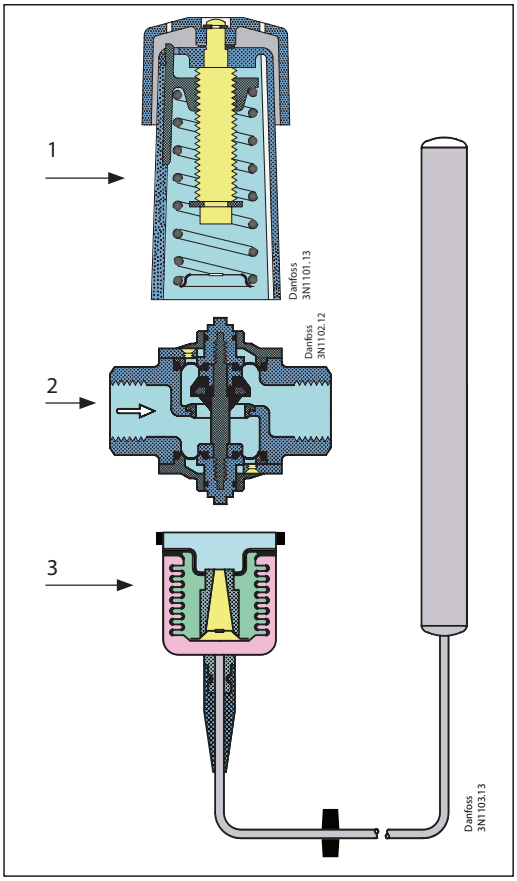

When the three elements have been assembled together, the valve installed and the sensor located at the point where the temperature is to be regulated, the function sequence is as follows:

1. The pressure changes in the sensor as a result of a change in temperature - builds up in the sensor.
2. This pressure is transferred to the valve via the capillary tube and bellows and acts as an opening or closing force.
3. The knob on the setting section and the spring exert a force that acts counter to the bellows.
4. When balance is created between the two opposing forces, the valve spindle remains in its position.
5. If the sensor temperature changes – or if the settings are changed – the point of balance becomes displaced and the valve spindle moves until balance is re-established, or the valve is fully open or closed.
6. The flow quantity change is approximately proportional to sensor temperature change.

The illustrations show an AVTA cooling water valve, but the function principle applies to all types of thermostatic valves.

AVTA applications

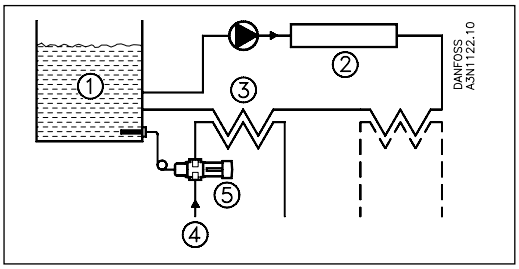

1. Oil tank
2. Hydraulic machinery
3. Heat exchangers
4. Cooling water supply
5. ATVA thermostatic valve

AVTA thermostatic valves are widely used for temperature regulation in many different machines and installations where cooling is required. AVTA cooling water valves always open to admit flow on rising sensor temperature.

The valve can be installed in either the cooling water flow line or the return line.

The standard version of the ATVA thermostatic valve can be used with fresh water or neutral brine.

Typical application areas:

- Injection moulding machines
- Compressors
- Vacuum pumps
- Dry cleaning machines
- Distillation plants
- Printing machines
- Hydraulic systems
- Roller mills
- Biomass boilers
- Industrial lasers
- Steam sterilizers
- Medical equipment
- Food processing

 © Danfoss A/S (AC-MCI / jmn), 2013-11

Materials

AVTA

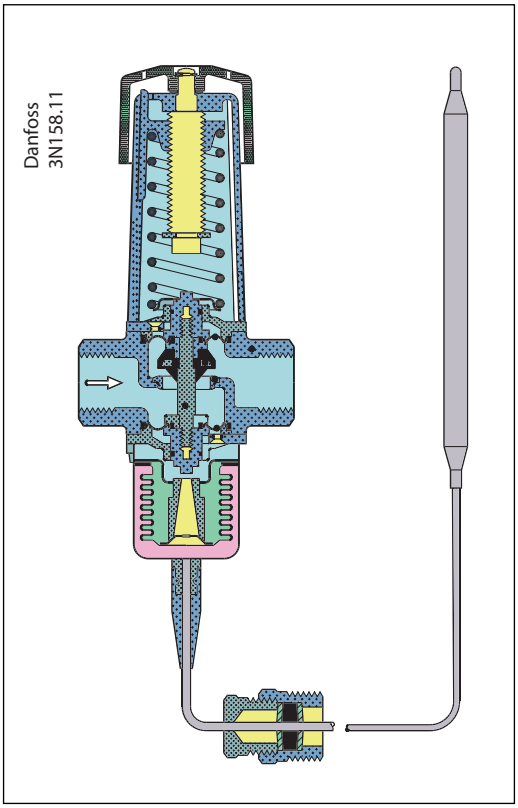

No.	Description	Material AVTA	Material AVTA SS
1	**Spindle**	Brass	Stainless steel
2	**Diaphragms**	Rubber – ethylene – propylene (EPDM).	
3	**Valve body and other metal parts**	Forged brass	Stainless steel
4	**Valve seat**	Stainless steel	
5	**Valve cone**	Nitrile rubber (NBR)	
6	**Sensor**	Copper	
7	**Capillary tube gland**	Nitrile rubber (NBR) / brass	

Charges

ATVA thermostatic valves with different types of charge

Universal charge

Mass charge

Adsorption charge

Ordering AVTA with adsorption charge

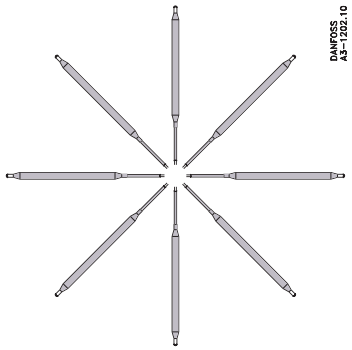

Sensor installation

The charge consists of active carbon and CO_2 which is adsorbed on falling sensor temperature, thereby producing a pressure change in the element.

- Wide regulating range,
- Can be installed in any position as far as orientation and temperature are concerned,
- Small sensor dimensions – ø0.4 × 5.9 in.
- Max. pressure on sensor 365 psi.

Connection	Regulating range	Max. temp. sensor	C_v value	Capillary tube length	Type	Code no. [1]
NPT [in.]	[°F]	[°F]	[US gpm]	[ft.]		
$^1/_2$- 14	50 - 176	266	2.2	7.6	AVTA 15	**003N6115**
$^3/_4$- 14	50 - 176	266	4.0	7.6	AVTA 20	**003N7120**
1 - 11 $^1/_2$	50 - 176	266	6.4	7.6	AVTA 25	**003N8125**

[1] Code no. covers complete valve incl. capillary tube gland.

For immersion pockets, see “Spare parts and accessories”, page 10.

 © Danfoss A/S (AC-MCI / jmn), 2013-11

Ordering AVTA with universal charge

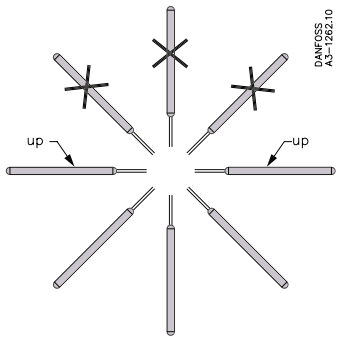

Sensor installation

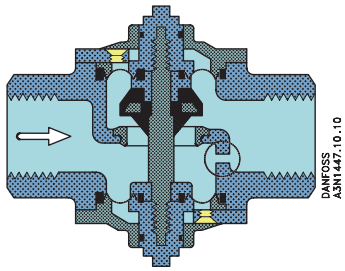

Valve body with bypass

The charge is a mix of liquid and gas where the liquid surface (regulating point) is always inside the sensor. Which charge medium is used depends on the regulation range.

- Sensor dimensions ø0.7 x 8.3 in.
- Sensor can be installed in a place where it is either colder or warmer than the valve,
- Sensors must be orientated as shown in the sketch below,
- Max. pressure on sensor 365 psi.

For immersion pockets, see "Spare parts and accessories", page 10.

Connection	Regulating range	Max. temp. sensor	C_v value	Capillary tube length	Type	Code no. [1]
NPT [in.]	[°F]	[°F]	[US gpm]	[ft.]		
½ - 14	32 - 86	135	2.2	6.6	AVTA 15	**003N6132**
1 - 11 ½	32 - 86	135	6.4	6.6	AVTA 25	**003N8132**
½ - 14	77 - 149	194	2.2	6.6	AVTA 15	**003N6162**
¾ - 14	77 - 149	194	4.0	6.6	AVTA 20	**003N7162**
1 - 11 ½	77 - 149	194	6.4	6.6	AVTA 25	**003N8162**
½ - 14	122 - 194	257	2.2	6.6	AVTA 15	**003N6182**
¾ - 14	122 - 194	257	4.0	6.6	AVTA 20	**003N7182**
1 - 11 ½	122 - 194	257	6.4	6.6	AVTA 25	**003N8182**

[1] Code no. covers complete valve incl. capillary tube gland.

Ordering AVTA with mass charge

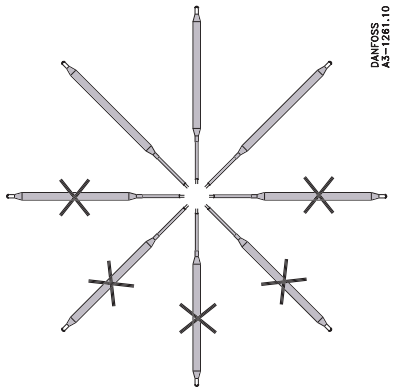

Sensor installation

The charge is a mix of liquid and gas. Due to the mixture of liquid and gas the sensor must be installed in an area or environment that is warmer than the valve.

- Small sensor dimensions – ø0.4 x 7.5 in.
- Short time constant,
- Max. pressure on sensor 365 psi.
- Only codes with G thread available

Connection [1]	Regulating range	Max. temp. sensor	C_v value	Capillary tube length	Type	Code no. [1]
	[°F]	[°F]	[US gpm]	[ft.]		
G 1/2	32 - 86	135	2.2	6.6	AVTA 15	**003N0042**
G 3/4	32 - 86	135	4.0	6.6	AVTA 20	**003N0043**
G 1/2	32 - 86	135	6.4	6.6	AVTA 15	**003N0045**
G 1/2	77 - 149	194	2.2	6.6	AVTA 15	**003N0034**
G 3/4	77 - 149	194	4.0	6.6	AVTA 20	**003N0046**
G 1	77 - 149	194	6.4	6.6	AVTA 25	**003N0047**

[1] Code no. covers complete valve incl. capillary tube gland.

 © Danfoss A/S (AC-MCI / jmn), 2013-11

Ordering AVTA in Stainless Steel with adsorption charge

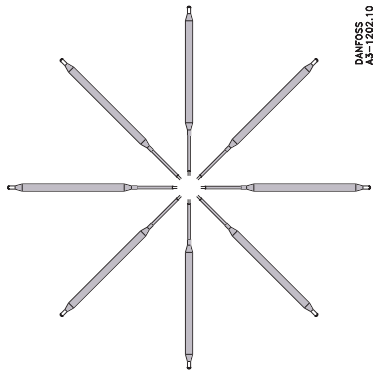

Sensor installation

- Wide regulating range,
- Can be installed in any position as far as orientation and temperature are concerned,
- Small sensor dimensions – ø0.4 x 5.9 in.
- Max. pressure on sensor 365 psi,
- AVTA SS mass and universal charges available on request,
- Only codes with G thread available.

For immersion pockets, see “Spare parts and accessories”, page 10.

Connection	Regulating range	Max. temp. sensor	k_v value	Capillary tube length	Type	Code no. [1]
	[°F]	[°F]	[US gpm]	[ft.]		
G 1/2	50 - 176	266	2.2	7.6	AVTA 15	**003N2150**
G 3/4	50 - 176	266	4.0	7.6	AVTA 20	**003N3150**
G 1	50 - 176	266	6.4	7.6	AVTA 25	**003N4150**

[1] Code no. covers complete valve incl. capillary tube gland.

Dimensions [in.] and weights [lbs] of AVTA valves in brass and stainless steel housings

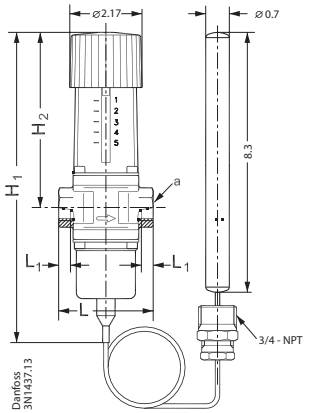

Universal sensor

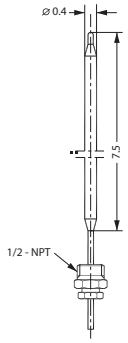

Mass sensor

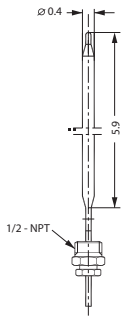

Adsorption sensor

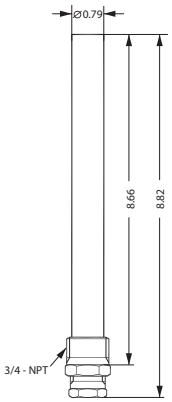

Brass/Stainless steel pockets for universal sensor

Stainless steel pockets for mass/adsorption sensor

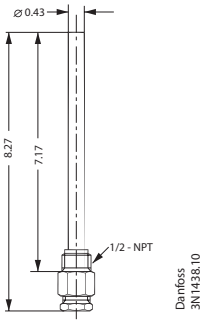

Brass pocket for mass/adsorption sensor

Type	H_1	H_2	L	L_1	a	Net weight
AVTA 15	9.45	5.24	2.84	0.56	1/2	3.20
AVTA 20	9.45	5.24	3.55	0.63	3/4	3.31
AVTA 25	9.85	5.43	3.74	0.75	1	3.64

 © Danfoss A/S (AC-MCI / jmn), 2013-11

Installation

AVTA with mounting bracket

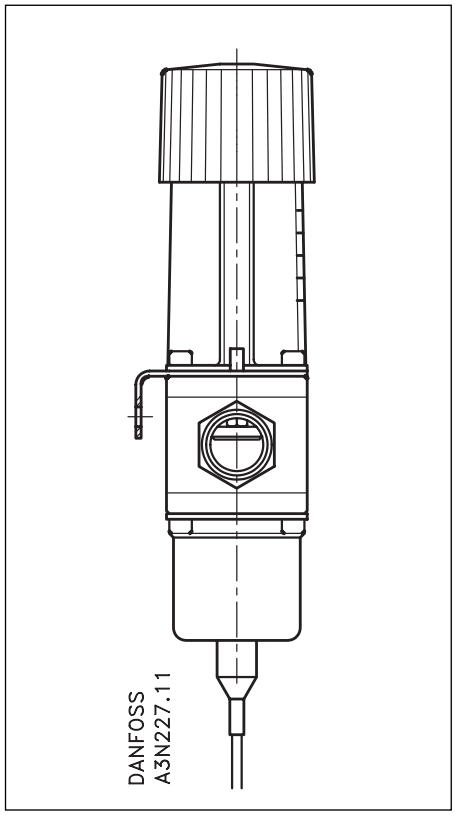

The valves can be installed in any position. An arrow on the valve body indicates the direction of flow.

AVTA valves are marked so that the letters RA are the right way up when the valve is held as shown. The installation of an FV filter ahead of the valve is recommended.

Capillary tube
Install the capillary tube without sharp bends (no "kinks"). Make sure that there is no strain on the capillary tube at the ends. Relief is important where vibration might occur.

Note:
When an AVTA valve is used, the sensor must be able to react to variations in cooling water temperature on system start. Therefore a bypass line with a shut-off valve might be necessary to ensure flow at the sensor during start-up. If a mounting bracket is used – see "Spare parts and accessories", page 10 – it must always be positioned between the valve body and the setting section (see illustration).

Accessories

	Designation	Description	Code no.
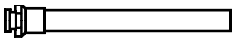		Brass for ø18 mm, sensor ¾ – 14 NPT	**003N0051**
		18/8 steel [1] for ø18 sensor, ¾ – 14 NPT	**003N0053**
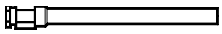	Immersion sensor max. pressure 725 psi L = 7.2 in.	Brass for ø9.5 sensor G ½	**017-436766**
		18/8 steel[1] for ø9.5 sensor R ½	**003N0196**
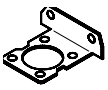	Mounting bracket	For AVTA	**003N0388**
	Heat-conductive compound	0.01 lbs tube	**041E0110**
		1,75 lbs	**041E0111**
	Set of 3 nitrile (NBR) diaphragms sets for mineral oil	For AVTA 10/15, 20, 25	**003N0448**
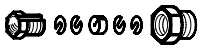		½ – 14 NPT	**003N0157**
		¾ – 14 NPT	**003N0056**
	Plastic hand knob	For AVTA	**003N0520**

[1] W. no. 1.4301

Spare parts

Thermostatic elements for AVTA valves

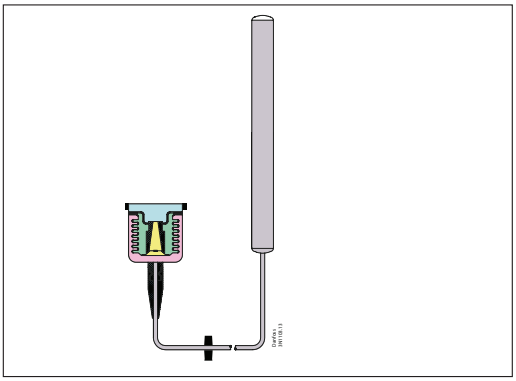

Thermostatic Elements	Temperature range [°F]	Capillary tube length [ft.]	Code no.
Adsorption charge – sensor ø0.4 x 5.9 in.	50 - 176	7' 6"	**003N0278**
Universal charge – sensor ø0.7 x 8.3 in.	32 - 86	6' 6"	**003N0075**
	32 - 86	16' 5"	**003N0077**
	77 - 149	6' 6"	**003N0078**
	77 - 149	16' 5"	**003N0080**
	122 - 194	6' 6"	**003N0062**
Mass charge – sensor ø04 x 7.5 in.	77 - 149	6' 6"	**003N0091**
	77 - 149	16' 5"	**003N0068**

 © Danfoss A/S (AC-MCI / jmn), 2013-11

Sizing

When sizing and selecting thermostatic valves, it is most important to ensure that the valve is able to give the necessary quantity of cooling water at any time, irrespective of the load. Therefore, to select a suitable size of valve it is necessary to know the precise amount of cooling required. On the other hand, to avoid the risk of unstable regulation (hunting), the valve should not be oversized.

The type of charge must be selected on the basis of the temperature to be maintained, and on an assessment of the characteristics of each type, as described in the foregoing.

In general the aim should be to select the smallest valve capable of giving the required flow.

It is also recommended that the temperature range be chosen so that the required sensor temperature lies in the middle of the regulation range.

To help fine-setting the valve, a thermometer should be installed near the sensor.

Valve size
The following data are used when selecting the valve size:

- Required cooling water flow,Q - [US gpm]
- Temperature rise in cooling water, Δt [°F]
- Differential pressure across valve, Δp [psi]

With fully open valve, the differential pressure should be around 50% of the total pressure drop across the cooling system.

The charts on page 12 are intended to make valve sizing easier.

Fig. 1 – Relation between heat quantity [TR] and cooling water quantity

Fig. 2 – Graphs of C_v values

Fig. 3 – Valve operating range

Fig. 4 – Flow quantities as a function of pressure drop Δp

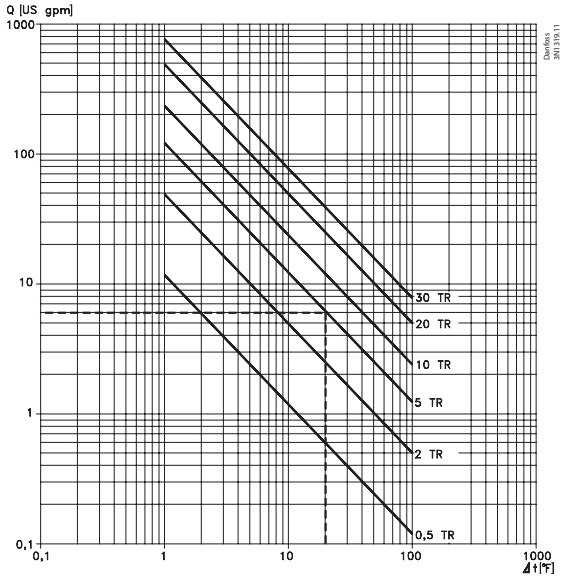

Fig. 1 Heating or cooling with water.

Example:
Nessesary cooling effect 5 TR with t = 20 °F.
Flow is 6 US gpm.

A cooling water valve must be selected for the temperature regulation of a vacuum pump.

Since direct regulation of the oil temperature is required, select an AVTA. The sensor position is horisontal and small dimensions are desirable.

Given data:
- Necessary cooling effect with full load 5 TR
- Oil temperature to be maintained at 113 °F
- Cooling water p_1 = 60 psi
- Discharge p_3 = 0 psi
- Discharge temperature t_1 = 88 °F
- Cooling water temperature t_2 = 68 °F

1. Using the graph in fig.1, you find the necessary cooling water quantity at Δt = 20 °F (88 – 68 °F) for 6 US gpm.

Sizing
(continued)

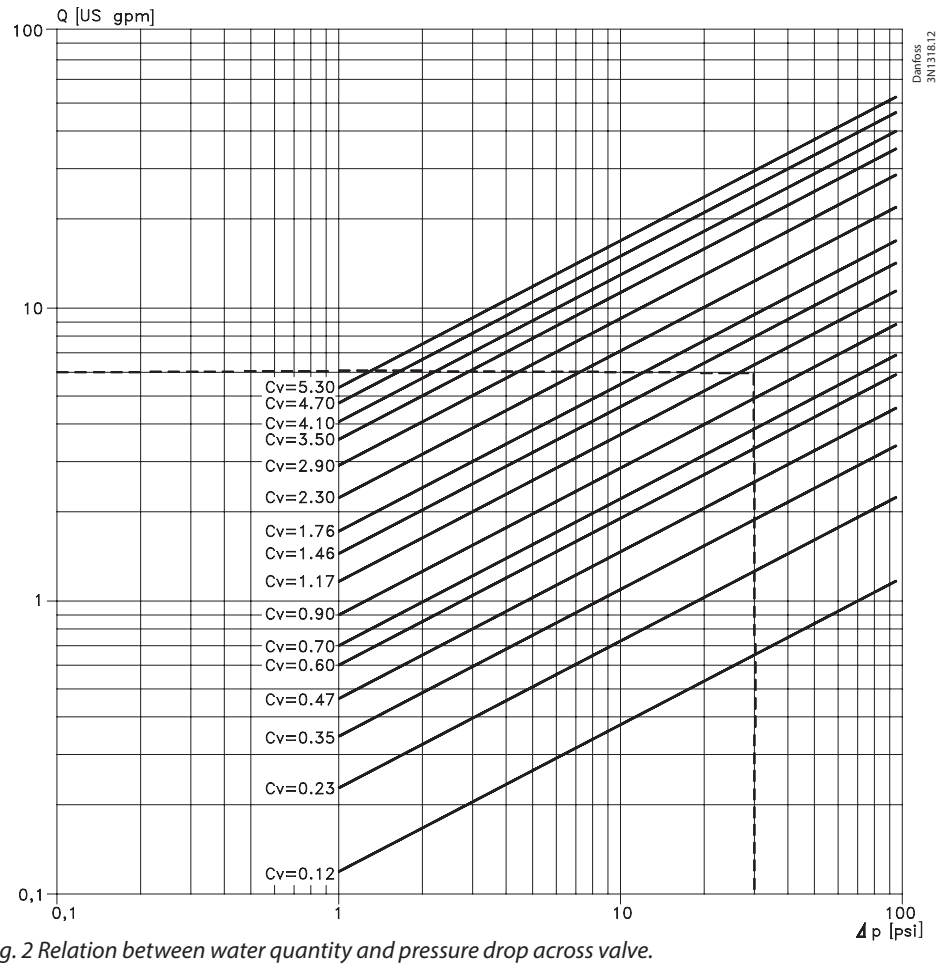

Fig. 2 Relation between water quantity and pressure drop across valve.

Example:
Flow 6 US gpm with a pressure drop of 30 psi.
The C_v-value becomes 1.17 US gpm.

2. Using the graph in fig. 2, you find the necessary C_v-value for 6 US gpm at Δp = 30 psi ((60 - 0)/2) for 1.17 US gpm.

3. It can be seen from the columns in fig.2 that all three AVTA valves ca n be used, but the preferable selection is a valve where the necessary C_v-value lies in the middle of the range. So in practice an AVTA 15 ought to be selected as it fully meets the demand.

Operating conditions and other requirements on the product in this example indicate that a valve with an adsorpsion charge is the most correct. The temperature range must be 50 – 176 °F.

The table on page 4 gives AVTA 15, code no.003N6115, which fulfill the requirements.To facilitate the installation a sensor pocket is often used. A sensor pocket for ⌀0,4" sensor in brass, code. no. **017-436766**, or in stainless steel, code no. **003N0196**, is listed under "Accessories" on page 10.

 © Danfoss A/S (AC-MCI / jmn), 2013-11

Sizing
(continued)

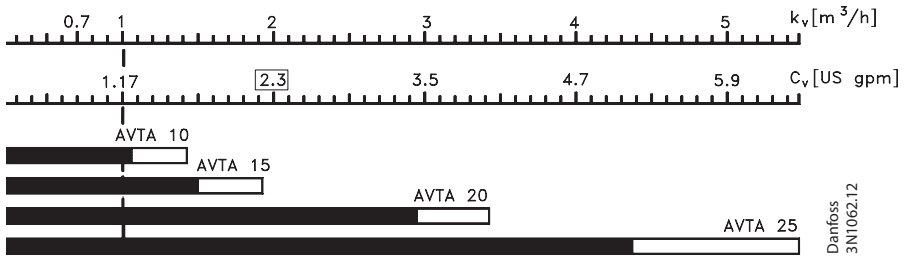

Fig. 3 Nomogram showing valve C_v-ranges. C_v values are allways water flow in US gpm for a pressure drop Δp of 1 psi. The preferable selection is a valve where the necessary C_v-value lies in the middle of the range, as a valve with a C_v-value close to either the max. or min. value is less stable and less precise due to either a relatively large Δp or ΔQ.

Example:
AVTA 15 is the most suitable for a C_v-value of 1.17 US gpm.

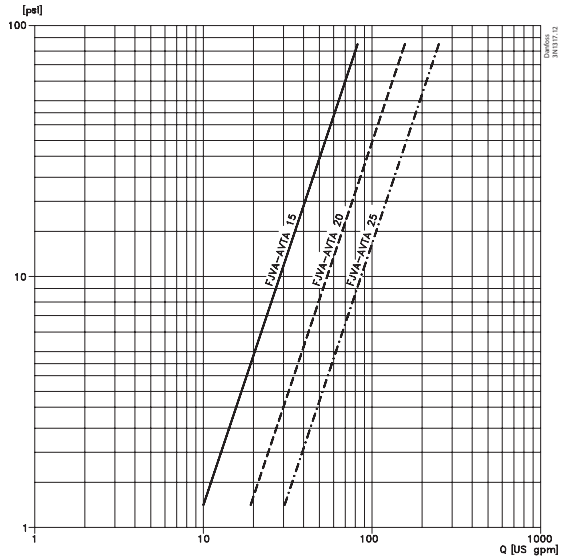

Fig. 4 Valve flow quantity in fully open position as a function of pressure drop Δp.

Options

- DZR brass
- Outer thread connecting
- Other lengths of capillary tubes
- Armouring of capillary tubes
- Other combinations of sizes, materials and ranges

Danfoss can accept no responsibility for possible errors in catalogues, brochures and other printed material. Danfoss reserves the right to alter its products without notice. This also applies to products already on order provided that such alterations can be made without subsequential changes being necessary in specifications already agreed.
All trademarks in this material are property of the respective companies. Danfoss and the Danfoss logotype are trademarks of Danfoss A/S. All rights reserved.