2013
Product Guide and Price List Americas

Effective April 1, 2013

Belimo Project: Bow Building, Calgary, Canada



Get It All, Get It Here

Belimo Americas, a world leader in the design and manufacture of damper actuators and control valves used in commercial HVAC systems. Known for its direct-coupled actuator and innovations in pressure independent control valve technology, Belimo offers innovations in comfort, energy efficiency and safety solutions to maintain an energy efficient building environment.

Belimo serves customers throughout the United States, Canada, Brazil, Latin America and the Caribbean. Belimo is an integral part of Belimo Holding AG (Belimo.com), a publicly held company headquartered in Hinwil, Switzerland with business units in the Americas, Europe, and Asia Pacific.

Precision

- Superior functionality in products designed for today's intelligent systems.
- Highly developed technology that allows for reduced energy consumption.
- Extended product life with added comfort and safety.
- Quality tested – built to last.
- ISO 9001 quality control.

Support

- Technical support and customer service group available over 11 hours a day, Monday to Friday to provide quotes, order information, and personalized assistance.
- New services are continuously developed and introduced to keep our customers at the center of our business efforts.
- Customer needs are responded to quickly and comprehensively.
- On-time delivery.
- Onsite around the globe.

Solutions

- Comprehensive actuation product line addresses all needs including rotary, linear, 360° rotation, and fire and smoke applications.
- Innovative valve offering provides cost-effective solutions promoting energy efficiency to complement economic and design trends.
- Simple ways to retrofit your existing electronic or pneumatic valves and actuators.
- Standard and high-performance valves to meet the wide range of commercial and light industrial applications.

Quality products you can rely on.

View our complete product line at www.belimo.us

067001 - 04/13 - Subject to change. © Belimo Aircontrols (USA), Inc.

SelectPro™

Sizing and Selection Made Simple.
Get it Here. Download it Now!

http://www.belimo.us/ishop/cms/sh/selectpro/select.html

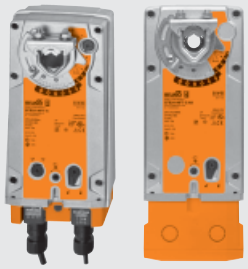

EF Spring Return Actuators

- Reduce wiring and installation time while offering manual override on large dampers with Belimo's high torque spring return solution.
- Rugged outdoor models are available with NEMA 4 (UL Type 4, IP 66) rating.
- Delivers 270 in-lbs [30 Nm] of min torque, driving dampers up to 66 square feet.

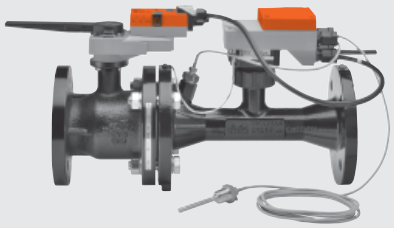

Energy Valve

- Improve coil ΔT by parameterize Delta T Manager mode to match the installed characteristic of the coil.
- Save pump distribution energy by eliminating coil overflow.
- Improve plant performance by improving chiller or boiler efficiency.
- Achieve coil performance that follows the calculated design flow rates exactly.

067001 - 04/13 - Subject to change. © Belimo Aircontrols (USA), Inc.

Table of Contents

DAMPER ACTUATORS

SPRING RETURN DAMPER ACTUATORS

Spring Return Damper Actuator Product Range Overview . . . 1-1
EF Series (270 in-lbs) . . . 1-4
AF Series (180 in-lbs) . . . 1-6
NF Series (90 in-lbs) . . . 1-8
LF Series (35 in-lbs) . . . 1-11
TF Series (22 in-lbs) . . . 1-12
AF Series with NEMA 4 Housing (180 in-lbs) . . . 1-14
NF Series with NEMA 4 Housing (90 in-lbs) . . . 1-15
Jackshaft for Spring Return Series Damper Actuators . . . 1-16

ELECTRONIC FAIL-SAFE DAMPER ACTUATORS

Electronic Fail-Safe Damper Actuator Product Range Overview . . . 2-1
GK Series (360 in-lbs) . . . 2-2
NKQ Series (54 in-lbs) . . . 2-4
AHK Series (101 lbf) . . . 2-6
GK Series with NEMA 4 Housing (360 in-lbs) . . . 2-8

FIRE AND SMOKE DAMPER ACTUATORS

Fire and Smoke Damper Actuator Product Range Overview . . . 3-1
FSAF Series (133 in-lbs) and FSAFB Series (180 in-lbs) . . . 3-2
FSNF Series(70 in-lbs) . . . 3-3
FSLF Series (30 in-lbs) . . . 3-4

NON-SPRING RETURN DAMPER ACTUATORS

Non-Spring Return Damper Actuator Product Range Overview . . . 4-1
GM Series (360 in-lbs) . . . 4-4
AM Series (180 in-lbs) . . . 4-6
NM Series (90 in-lbs) . . . 4-8
LM Series (45 in-lbs) . . . 4-10
Quick Running Series . . . 4-12
NEMA 4 Series Housing . . . 4-13
Jackshaft for Non-Spring Return Series Damper Actuators . . . 4-14
CM Series (18 in-lbs) . . . 4-15
AH Linear Series (101 lbf) . . . 4-16
LH Linear Series (34 lbf) . . . 4-18
LU Rotary Series (27 in-lbs) . . . 4-20

DAMPER ACTUATOR ACCESSORIES

MFT Damper Actuator Accessories . . . 5-1
Mechanical Damper Actuator Accessories . . . 5-2
Electronic Damper Actuator Accessories . . . 5-10

ENERGY VALVE

Energy Valve Product Range Overview . . . 6-1
Operation/Installation . . . 6-2
Stainless Steel Trim (2½" to 6") 2-way with Non-Spring Return Actuators . . . 6-4
Energy Valve Accessories . . . 6-5

PRESSURE INDEPENDENT VALVES

PRESSURE INDEPENDENT CHARACTERIZED CONTROL VALVES (PICCV™) (P2 SERIES)

PICCV Product Range Overview . . . 7-1
Set-Up . . . 7-2
Flow Pattern/Installation/Piping . . . 7-3
Brass Trim (½" to 1") 2-way with Non-Spring Return Actuators . . . 7-4
Brass Trim (1¼" to 2") 2-way with Non-Spring Return Actuators . . . 7-5
Brass Trim (½" to 1¼") 2-way with Spring Return Actuators . . . 7-7
Brass Trim (1½" to 2") 2-way with Spring Return Actuators . . . 7-8
Heat Pump Applications . . . 7-10
Brass Trim (½" to 1") 2-way for Water Source Heat Pumps . . . 7-11
Customize Products, LR Series Valve Actuators . . . 7-12
Customize Products, AR Series Valve Actuators . . . 7-13
PICCV Accessories . . . 7-14

ELECTRONIC PRESSURE INDEPENDENT CONTROL VALVES (ePIV) (P6 SERIES)

ePIV Product Range Overview . . . 7-17
Set-Up/Flow Pattern/Flow Tolerance . . . 7-18
Installation/Piping . . . 7-19
Stainless Steel Trim (2½" to 6") 2 way with Non-Spring Return Actuators . . . 7-20
Stainless Steel Trim (2½" to 6") 2 way with Electronic Fail-Safe Actuators . . . 7-21
ePIV Accessories . . . 7-22

CHARACTERIZED CONTROL VALVES

6-WAY CHARACTERIZED CONTROL VALVES

6-Way Product Range Overview . . . 8-1
Brass Trim (½" to ¾") 6-way with Non-Spring Return Actuators . . . 8-2

Table of Contents (cont.)

CHARACTERIZED CONTROL VALVES (CCV) (B2, B3, B6 SERIES)

CCV Product Range Overview . . . 9-2
Pipe Reduction Chart . . . 9-5
Set-Up . . . 9-6
Flow Pattern/Piping/Operation/Installation . . . 9-7
Brass Trim (½" to ¾") 2-way/3-way with Non-Spring Return Actuators . . . 9-8
Brass Trim (½" to ¾") 2-way/3-way with Spring Return Actuators . . . 9-9
Stainless Steel Trim (½" to 3") 2-way/3-way . . . 9-10
Stainless Steel Trim (2½" to 6") 2-way Flanged . . . 9-18
Stainless Steel Trim (½" to 3") 2-way/3-way with NEMA 4X Non-Spring Return Actuators . . . 9-20
Stainless Steel Trim (1¼" to 3") 2-way/3-way with NEMA 4X Spring Return Actuators . . . 9-22
Stainless Steel Trim (½" to 2") 2-way/3-way with Quick Running Non-Spring Return Actuators . . . 9-23
Customize Products, AR Series Valve Actuators . . . 9-25
Customize Products, LR Series Valve Actuators . . . 9-26
Default and MFT Programming Codes . . . 9-27
CCV Accessories . . . 9-28

HIGH TEMPERATURE CHARACTERIZED CONTROL VALVES (HTCCV) (B2..HT SERIES)

HTCCV Product Range Overview . . . 10-1
Set-Up . . . 10-2
Flow Pattern/Assembly/Operation/Installation . . . 10-3
Stainless Steel Trim (½" to 1") 2-way . . . 10-4
HTCCV Accessories . . . 10-6

ROTARY VALVES

INDUSTRIAL BALL VALVES (B2...VS/VSS, B3..VS, B6..VS SERIES)

Ball Valve Product Range Overview . . . 11-1
Flow Pattern/Piping Diagrams . . . 11-2
Piping Reduction Chart . . . 11-3
Bronze Trim (½" to 3"), 2-way . . . 11-4
Bronze Trim (½" to 1½"), 3-way . . . 11-8
Bronze Trim (½" to 3"), 2-way with NEMA 4X Actuators . . . 11-11
Stainless Body and Trim (½" to 3"), 2-way . . . 11-12
Cast Iron Flanged Body (2" to 10"), 2-way with NEMA 4X Actuators . . . 11-16

V BALL VALVES (B2..VB, B6..VB SERIES)

V Ball Product Range Overview . . . 12-1
General Information/Flow Pattern/Piping . . . 12-2
Piping Reduction Chart . . . 12-3
Stainless Steel Body (1" to 6"), 2-way with Non-Spring Return Actuators . . . 12-4
Stainless Steel Body (1" to 4"), 2-way with Spring Return and Electronic Fail-Safe Actuators . . . 12-5
Ball Valve Accessories . . . 12-6

ZONE VALVES (ZONE 2/ZONE 3 SERIES)

Zone Valve Product Range Overview . . . 13-1
Installation . . . 13-2
Brass Body (½" to 1") 2-way/3-way with Spring Return Actuators . . . 13-3

GLOBE VALVES (G2, G3, G6, G7 SERIES)

Globe Valve Product Range Overview . . . 14-1
Flow Pattern/Set-Up . . . 14-4
Bronze Trim (½" to 2") 2-way/3-way with Non-Spring Return and Electronic Fail-Safe Actuators . . . 14-7
Stainless Steel Trim (½" to 2") 2-way with Non-Spring Return and Electronic Fail-Safe Actuators . . . 14-11
Bronze or Stainless Steel Trim (1/2" to 2") 2-way/3-way with Spring Return Actuators . . . 14-13
Bronze Trim (2½" to 6") 2-way, Pressure Compensated ANSI 125 Flanged . . . 14-17
Stainless Steel Trim (2½" to 6") 2-way, Pressure Compensated ANSI 125 Flanged . . . 14-20
Bronze Trim (2½" to 6") 2-way, ANSI 250 Flanged . . . 14-26
Stainless Steel Trim (2½" to 6") 2-way, ANSI 250 Flanged . . . 14-29
Bronze Trim (2½" to 6") 3-way, ANSI 125 Flanged . . . 14-32
Stainless Steel Trim (2½" to 6") 3-way, ANSI 125 Flanged . . . 14-35
Bronze Trim (2½" to 6") 3-way, ANSI 250 Flanged . . . 14-38
Stainless Steel Trim (2½" to 6") 3-way, ANSI 250 Flanged . . . 14-41
Globe Valve Accessories . . . 14-44

BUTTERFLY VALVES (F6,F7 SERIES)

Butterfly Valve Product Range Overview . . . 15-1
Butterfly Valve Selection . . . 15-4
Butterfly Valve SY Actuators . . . 15-8
HDU Series (2" to 6") 2-way/3-way with Non-Spring Return Actuators . . . 15-10
HDU Series (2" to 6") 2-way/3-way with Spring Return and Electronic Fail-Safe Actuators . . . 15-11
HDU Series (2" to 6") 2-way/3-way with NEMA 4 Actuators . . . 15-12
HDU Series (2" to 12") 2-way/3-way with NEMA 4X Actuators . . . 15-15
HD Series (2" to 4") 2-way/3-way with Non-Spring Return Actuators . . . 15-17
HD Series (2" to 4") 2-way/3-way with Spring Return and Electronic Fail-Safe Actuators . . . 15-18
HD Series (2" to 4") 2-way/3-way with NEMA 4 Actuators . . . 15-19
HD Series (2" to 30") 2-way/3-way with NEMA 4X Actuators . . . 15-22
VIC Series (2" to 4") 2-way/3-way with Non-Spring Return and Spring Return Actuators . . . 15-26
VIC Series (2" to 12") 2-way/3-way with NEMA 4X Actuators . . . 15-28
SHP Series (2" to 4") 2-way/3-way ANSI Class 150 with Non-Spring Return Actuators . . . 15-30



6-Way Characterized Control Valve

- Ideal for chilled beams and radiant ceilings offering reduced wiring by using a single actuator instead of two.
- Eliminates the need for a change over valve and enables the use of a single coil for heating and cooling.
- True close-off to isolate both heating and cooling loops.
- Two sequences with different Cv capabilities (e.g. heating and cooling).
- Linear flow characteristic.

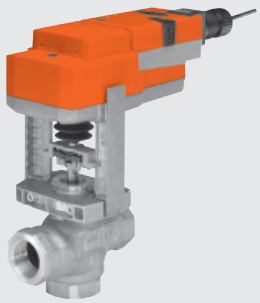

New Generation Globe Valve Actuator

- Higher steam inlet rating up to 100 psi.
- Increased force ranges for higher close-off pressures.
- Full selection of electronic fail and non-fail-safe options.
- Field selectable, fail-safe position with switch.
- Modular order entry process for customizing flexibility, i.e. cable length, run times, etc.

067001 - 04/13 - Subject to change. © Belimo Aircontrols (USA), Inc.



ZG-JSL Jackshaft Linkage

- Simplifies typical installations and eliminates the difficulties where jackshaft bearings are hard to access.
- Unique open ended design and clamp insert accommodates any jackshaft ½" to 1.05" in diameter.
- Anti-rotation plate enables various actuators to be mounted and in multiple orientations.
- Saves time and cost.

Belimo University

- Training courses focused on the technical aspects - including sizing and selection, mounting and installation – of HVAC products.
- Courses are available at Belimo state-of-the-art facilities in Danbury, CT or Sparks, NV; at your location; or online at *www.belimouniversity.com.*
- Courses are available in English, Spanish and French.

067001 - 04/13 - Subject to change. © Belimo Aircontrols (USA), Inc.

Table of Contents (cont.)

SHP Series (2" to 4") 2-way/3-way ANSI Class 150 with Spring Return and Electronic Fail-Safe Actuators . . . 15-31
SHP Series (2" to 30") 2-way/3-way ANSI Class 150 with NEMA 4 & 4X Actuators . . . 15-32
SHP Series (2" to 4") 2-way/3-way ANSI Class 300 with Non-Spring Return Actuators . . . 15-37
SHP Series (2" to 4") 2-way ANSI Class 300 with Spring Return and Electronic Fail-Safe Actuators. . . . 15-38
SHP Series (2" to 4") 2-way/3-way ANSI Class 300 with NEMA 4 Actuators . . . 15-39
SHP Series (2" to 24") 2-way/3-way ANSI Class 300 with NEMA 4X Actuators, . . . 15-40
Butterfly Valve Accessories . . . 15-44

PIPE PACKAGES
Component Pricing . . . 16-1
For 2-way PICCV . . . 16-2
For 2-way CCV . . . 16-4
For 3-way CCV . . . 16-6
For Zone Valves . . . 16-8

ECONOMIZER RETROFIT SOLUTIONS
Econ-ZIP-Base with Spring Return Actuators . . . 17-1
Economizer Accessories . . . 17-1
Honeywell to Belimo Economizer Solutions. . . . 17-3
Retrofit Replacement Solutions . . . 17-4

RETROFIT SOLUTIONS
Damper Actuators
Why Retrofitting Makes Sense . . . 18-1
Replacement of Discontinued Belimo Products . . . 18-2
Valves
UGSL1200 Short-Stroke Valve Retrofit Kit . . . 18-5
How to Select a Globe Valve Retrofit Solution . . . 18-6
Globe Valve Retrofit Actuators . . . 18-9
UGVL, SGVL, WGVL Linkages with Non-Spring Return Actuators . . . 18-10
UGVL, SGVL, WGVL Linkages with Electronic Fail-Safe Actuators . . . 18-11
UGLK Retrofit Components (various manufacturers) . . . 18-12
Globe Valve Retrofit Solutions - (Honeywell, Johnson Controls, Robertshaw, Siebe\Invensys\Barber Colman, Siemens\Landis\Powers, Warren Controls) . . . 18-13
Custom Globe Valve Retrofit Solutions. . . . 18-56
Custom Globe Valve Retrofit Solutions Form . . . 18-57
How to Select a Butterfly Valve Retrofit Solution. . . . 18-59
Butterfly Valve Retrofit Actuators . . . 18-60
Butterfly Valve Retrofit Solutions - (Belimo, Bray, Centerline, Flowseal, Johnson Controls, Keystone, Milwaukee, Nibco, PDC, Victaulic) . . . 18-62
Specialty Solutions for Valve Manufacturers- (Apollo, Challenger, Chemtrol, Dezurik, FNW, Gruvlok, Hammond, Jamesbury, Jenkins, Metraflex, Mueller, Quartermaster, Watts) . . . 18-75
Custom Butterfly Valve Retrofit Solution Form. . . . 18-76
Custom Ball Valve Retrofit Solution Form . . . 18-80

APPENDIX
Valve Sizing - Water and Steam Applications . . . 19-3
ANSI/API Standards. . . . 19-12
Water Guidelines . . . 19-13
Terms and Conditions of Sale and Warranty . . . 19-14
Valve Quotation Form . . . 19-16
Custom MFT Configuration Order Form. . . . 19-17
Custom Ball Valve Retrofit Solution Form. . . . 19-18
Custom Globe Valve Retrofit Solution Form . . . 19-20
Custom Butterfly Valve Retrofit Solution Form . . . 19-22
Valve and Actuator Specifications (*www.belimo.us*) . . . 19-23

Platinum Distributors . . . *inside back cover*

DAMPER ACTUATORS

SPRING RETURN, ELECTRONIC FAIL-SAFE, FIRE & SMOKE AND NON-SPRING RETURN ACTUATORS



- Comprehensive torque offering (18 in-lbs to 360 in-lbs), a vast selection of actuators for a wide range of applications.
- Low power consumption provides higher efficiency and smaller transformer sizing.
- Minimum torque guaranteed over entire specified operating range, no loss in performance due to temperature or supply voltage.
- Multi-Function Technology (MFT) is available giving the user the flexibility to customize and adapt a single actuator to various controllers and applications.
- Fail-safe position can be set 0-100% in 10% increments manually or by using the PC-Tool offering a wide range of fail-safe positions (only available on electronic fail-safe actuators).
- Belimo FS Actuators are UL555 and UL555S listed with U.S. damper manufacturers.



Applications

Belimo actuators are designed for use in a wide variety of HVAC damper applications. For active smoke control systems, Belimo offers the proportional FSAF24-SR for stairwell, under-floor, and other pressurization applications. With our comprehensive torque range and the ability to direct mount on standard damper shafts or jackshafts, solutions are available for fire and smoke dampers, control dampers, air handlers, and economizer units.







Quality, Reliability, and Technical Prowess.



The EF series of spring return actuators delivers 270 in-lbs plus a NEMA 4 option on select models to meet tough environmental conditions for larger size damper and valve applications.

The new generation AF and NF actuators feature a compact size, low power consumption, increased torque to 180 in-lbs (AF series), 90 in-lbs (NF series) and faster running times (with MFT technology). These actuators provide new solutions for control dampers, control valves and retrofit applications.





The electronic fail-safe actuators feature high torque (360 in-lbs) and quick running (4 seconds) models with a fail-safe position that can be set from 0-100% in 10% increments. LED status and low power consumption offers you a new solution for control dampers, air handlers, exhaust fume hoods, economizer units, VAV terminal units, fan coil units, fan shutters, and unit ventilators.

Sizing and Selection Made Simple.
Get it Here. Download it Now!

SelectPro™

http://www.belimo.us/ishop/cms/sh/selectpro/select.html

1 SPRING RETURN DAMPER ACTUATORS

- Comprehensive torque offering (22 in-lbs to 270 in-lbs) over a vast selection of actuators for a wide range of applications.
- True mechanical spring return, providing reliable fail-safe.
- Manual override crank eases installation (all EF, AF and NF series only).
- Low power consumption provides higher efficiency and smaller transformer sizing.
- Minimum torque guaranteed over entire specified operating range, no loss in performance due to temperature or supply voltage.
- MFT is available in all spring return actuators, giving the user the flexibility to customize and adapt a single actuator to various controllers and applications.



Applications

Belimo actuators are designed for use in a wide variety of HVAC damper applications. With our comprehensive torque range and the ability to direct mount on standard damper shafts or jackshafts, solutions are available for control dampers, air handlers, economizer units, VAV terminal units, fan coil units, fan shutters, and unit ventilators.





Spring Return Damper Actuator Nomenclature

EF		X	24	-MFT	-S	N4
Torque Rating EF = 270 in-lbs AF = 180 in-lbs NF = 90 in-lbs LF = 35 in-lbs TF = 22 in-lbs	**Speed †** C = Fast Running L = Slow Running	**Options** Blank = None B = Basic X = Customized	**Power Supply** 24 = 24 VAC/DC 120 = 120 VAC* 230 = 230 VAC UP = 24 to 240 VAC**	**Control** Blank = On/Off -3 = Floating Point -SR = 2-10 VDC -PC = 0 to 20 Volt (Phasecut) -ECON-RO3 = 3 kΩ NTC Type 10 Thermistor -MFT = Multi-Function Technology -MFT95 = 0 to 135 Ω -MFT-20 = 6 to 9 VDC, 20 VDC Power Supply	-S = Built-in Auxiliary Switch	US N4 ♦

♦ NEMA 4 option on select models
† Only available on certain LF and TF models.
***EF and TF series have 100 to 240 VAC nominal power supply.**
****24 to 125 VDC**

Ordering Example

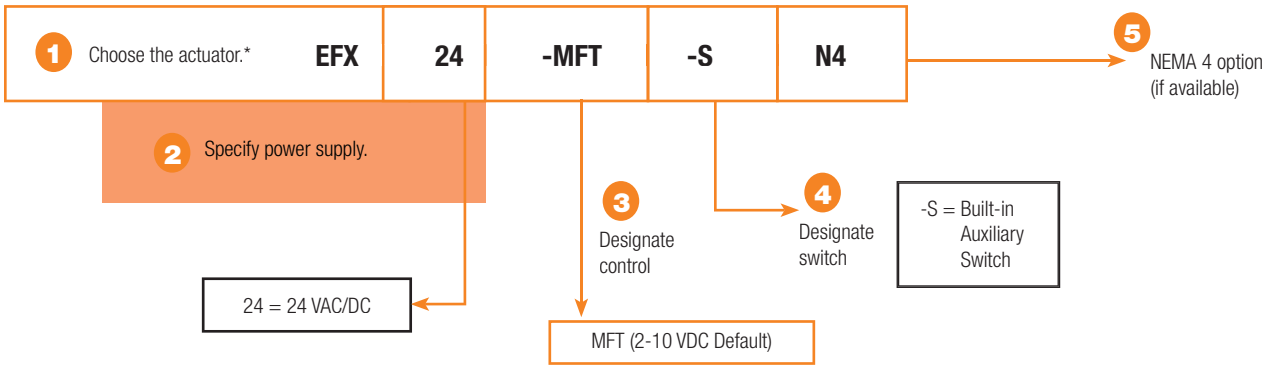

6 Complete Ordering Example: EFX24-MFT-S N4

* All functions and options are not available with all versions

Standard Spring Return Damper Actuator Product Range

		Running Time(s)		Power Supply				Power Consumption		Control Input				Control Input MFT				Position Feedback		Auxiliary Switches	NEMA 4
		Motor Drive (Default)	Spring Return	24 VAC +/- 20%, 50/60 HZ, VDC +/- 10%	24 to 240 VAC +10%/- 20%, 50/60 HZ 24 to 125 VDC +/- 10%	120 VAC +/- 10%	230 VAC +/- 10%	VA Rating, Transformer Sizing	Wattage Running (Holding)	On/Off	2-10 VDC (Default) 4-20 mA (w/500 Ω Resistor)	0-20 V Phasecut	Honeywell Series 90, 0-135 Ω	On/Off	Floating Point	Start and Span adj., Start 0.5 to 30 VDC, Span 2.5 to 32 VDC	PWM adj., 0.02 to 50.0 Seconds	2-10 VDC (Default)	VDC Variable, Start 0 to 8, Span 2 to 10 VDC	2 SPDT, 3 A (0.5 A inductive) @250V	NEMA 4 Option (part # + N4) Example: EFB24 N4
 **EF Series** 270 in-lbs [30 Nm] Approx. 66 sq. ft.	EFB24†	75	<20♦	●				16	9.5 (4.5)	●											●
	EFB24-S†	75	<20♦	●				16	9.5 (4.5)	●										●	
	EFX120†	75	<20♦			●	●	21	9.5 (4.5)	●											
	EFB120-S†	75	<20♦			●	●	21	9.5 (4.5)	●										●	●
	EFB24-SR	95	<20♦	●				14	8 (4.5)		●							●			●
	EFX24-SR-S	95	<20♦	●				14	8 (4.5)		●							●		●	●
	EFB24-MFT†	60…150 (150)	<20♦	●				16	9.5 (4.5)		●			●	●	●	●	●	●		
	EFB24-MFT-S†	60…150 (150)	<20♦	●				16	9.5 (4.5)		●			●	●	●	●	●	●	●	
 **AFB Series** 180 in-lbs [20 Nm] Approx. 45 sq. ft.	AFB24†	<75	20♦	●				7.5	5.0 (2.5)												●
	AFB24-S†	<75	20♦	●				7.5	5.0 (2.5)											●	●
	AFBUP†	<75	20♦		●			8.5*	7.0 (3.5)	●											●
	AFBUP-S†	<75	20♦		●			8.5*	7.0 (3.5)	●										●	●
	AFB24-SR	95	<20♦	●				8.5	5.5 (3.0)		●							●			●
	AFB24-SR-S	95	<20♦	●				8.5	5.5 (3.0)		●							●		●	●
	AFB24-PC	150	<20♦	●				10	7.5 (3.0)			●						●			
	AFB24-MFT†	70…220 (150)	<20♦	●				10	7.5 (3.0)		●			●	●	●	●	●	●		●
	AFB24-MFT-S†	70…220 (150)	<20♦	●				10	7.5 (3.0)		●			●	●	●	●	●	●	●	●
	AFB24-MFT95†	70…220 (150)	<20♦	●				10	7.5 (3.0)				●					●	●		●
 **NFB Series** 90 in-lbs [10 Nm] Approx. 22 sq. ft.	NFB24	<75	20♦	●				8.5	6.0 (2.5)	●											●
	NFB24-S	<75	20♦	●				8.5	6.0 (2.5)	●										●	●
	NFBUP	<75	20♦		●			6.5	6.0 (2.5)	●											●
	NFBUP-S	<75	20♦		●			6.5	6.0 (2.5)	●										●	●
	NFB24-SR	95	<20♦	●				6	3.5 (2.5)		●							●			●
	NFB24-SR-S	95	<20♦	●				6	3.5 (2.5)		●							●		●	●
	NFB24-MFT	40…220 (150)	<20♦	●				9	6.5 (3.0)		●			●	●	●	●	●	●		●
	NFB24-MFT-S	40…220 (150)	<20♦	●				9	6.5 (3.0)		●			●	●	●	●	●	●	●	●

♦ <60 seconds @ -22°F [-30°C].
† Piggy back mounting on a single shaft: On/Off wired in parallel and -MFT (EFB and AFB only) wired master slave. Please call Belimo customer service for details.
* 8.5 VA for 120 VAC; 7 VA for 24 VAC, 18 VA for 240 VAC.

067001 - 04/13 - Subject to change. © Belimo Aircontrols (USA), Inc.

Standard Spring Return Damper Actuator Product Range

		Running Time(s)		Power Supply			Power Consumption		Control Input					Control Input MFT				Position Feedback		Auxiliary Switches
		Motor Drive (Default)	Spring Return	24 VAC +/- 20%, 50/60 HZ, VDC +/- 10%	120 VAC +/- 10%	230 VAC +/- 10%	VA Rating, Transformer Sizing	Wattage Running (Holding)	On/Off	Floating Point	2-10 VDC (Default) 4-20 mA (w/500 Ω Resistor)	3 kΩ NTC Type 10 Thermistor	6 - 9 VDC, 20 VDC Output Voltage	On/Off	Floating Point	Start and Span adj., Start 0.5 to 30 VDC, Span 2.5 to 32 VDC	PWM adj., 0.02 to 50.0 Seconds	2-10 VDC (Default)	VDC Variable, Start 0 to 8, Span 2 to 10 VDC	1 SPDT, 3 A (0.5 A inductive) @250V
 **LF Series** 35 in-lbs [4 Nm] Approx. 8.5 sq. ft.	LF24 US	<40 to 75	<25♦	●			7	5.0 (2.5)	●											
	LF24-S US	<40 to 75	<25♦	●			7	5.0 (2.5)	●											●
	LF120 US	<40 to 75	<25♦		●		7.5	5.5 (3.5)	●											
	LF120-S US	<40 to 75	<25♦		●		7.5	5.5 (3.5)	●											●
	LF230 US	<40 to 75	<25♦			●	7	5.0 (3.0)	●											
	LF230-S US	<40 to 75	<25♦			●	7	5.0 (3.0)	●											●
	LF24-SR US	150	<25♦	●			5	2.5 (1.0)			●							●		
	LF24-SR-S US	150	<25♦	●			5	2.5 (1.0)			●							●		●
	LF24-SR-E US	150	<25♦	●			5	2.5 (1.0)			●							●		
	LF24-3 US	150	<25♦	●			5	2.5 (1.0)		●										
	LF24-3-S US	150	<25♦	●			5	2.5 (1.0)		●										●
	LF24-ECON-R03 US	95	<25♦	●			5	2.5 (1.0)				●						●		
	LF24-MFT US	75…300 (150)	<25♦	●			5	2.5 (1.0)			●			●	●	●	●	●	●	
	LF24-MFT-S US	75…300 (150)	<25♦	●			5	2.5 (1.0)			●			●	●	●	●	●	●	●
	LF24-MFT-20 US	150	<25♦	●			6	3.5 (1.5)					●	●	●	●	●	●	●	
	LF24-MFT-S-20 US	150	<25♦	●			6	3.5 (1.5)					●	●	●	●	●	●	●	●
	LFC24-3-R US	90	<25♦	●			5	2.5 (1.0)		●										
	LFC24-3-S US	90	<25♦	●			5	2.5 (1.0)		●										●
 **TFB Series** 22 in-lbs [2.5 Nm] Approx. 5.5 sq. ft.	TFB24	<75	<25♦	●			5	2.0 (1.3)	●											
	TFB24-S	<75	<25♦	●			5	2.0 (1.3)	●											●
	TFLB24	<75	<75	●			5	2.0 (1.3)	●											
	TFB120	<75	<25♦		●	●	5	2.5 (1.3)	●											
	TFB120-S	<75	<25♦		●	●	5	2.5 (1.3)	●											●
	TFLB120	<75	<75		●	●	5	2.5 (1.3)	●											
	TFCB120-S	<30	<25♦		●	●	6	3.0 (1.5)	●											●
	TFB24-SR	95	<25♦	●			4	2.0 (1.0)			●							●		
	TFB24-SR-S	95	<25♦	●			4	2.0 (1.0)			●							●		●
	TFB120-SR	95	<25♦		●	●	5.5	2.5 (2.0)			●							●		
	TFB24-3	95	<25♦	●			4	2.5 (1.0)		●										
	TFB24-3-S	95	<25♦	●			4	2.5 (1.0)		●										●
	TFB24-MFT	75…300 (150)	<25♦	●			4	2.5 (1.0)			●			●	●	●	●	●	●	
	TFB24-MFT-S	75…300 (150)	<25♦	●			4	2.5 (1.0)			●			●	●	●	●	●	●	●

♦ <60 seconds @ -22°F [-30°C].

067001 - 04/13 - Subject to change. © Belimo Aircontrols (USA), Inc.

Custom Spring Return Damper Actuator Product Range

		Custom Options	Running Time(s)		Power Supply				Power Consumption		Control Input			Control Input MFT				Position Feedback		Auxiliary Switches		NEMA 4
		10 ft. (3m) or 16 ft. (5m) cable	Motor Drive (Default)	Spring Return	24 VAC +/- 20%, 50/60 HZ, VDC +/- 10%	24 to 240 VAC +10%/- 20%, 50/60 HZ 24 to 125 VDC +/- 10%	120 VAC +/- 10%	230 VAC +/- 10%	VA Rating, Transformer Sizing	Wattage Running (Holding)	On/Off	2-10 VDC (Default) 4-20 mA (w/500 Ω Resistor)	Honeywell Series 90, 0-135 Ω	On/Off	Floating Point	Start and Span adj., Start 0.5 to 30 VDC, Span 2.5 to 32 VDC	PWM adj., 0.02 to 50.0 Seconds	2-10 VDC (Default)	VDC Variable, Start 0 to 8, Span 2 to 10 VDC	2 SPDT, 3 A (0.5 A inductive) @250V	1 SPDT, 3 A (0.5 A inductive) @250V	NEMA 4 Option (part # + N4) Example: EFX24-S N4
 **EFX Series** 270 in-lbs [30 Nm] Approx. 66 sq. ft.	EFX24†	●	75	<20♦	●				16	9.5 (4.5)	●											
	EFX24-S†	●	75	<20♦	●				16	9.5 (4.5)	●									●		●
	EFX120†	●	75	<20♦			●	●	21	9.5 (4.5)	●											
	EFX120-S†	●	75	<20♦			●	●	21	9.5 (4.5)	●									●		●
	EFX24-SR	●	95	<20♦	●				14	8 (4.5)		●						●				
	EFX24-SR-S	●	95	<20♦	●				14	8 (4.5)		●						●		●		●
	EFX24-MFT†	●	60…150 (150)	<20♦	●				16	9.5 (4.5)		●		●	●	●	●	●	●			
	EFX24-MFT-S†	●	60…150 (150)	<20♦	●				16	9.5 (4.5)		●		●	●	●	●	●	●	●		●
 **AFX Series** 180 in-lbs [20 Nm] Approx. 45 sq. ft.	AFX24†	●	<75	20♦	●				7.5	5.0 (2.5)	●											●
	AFX24-S†	●	<75	20♦	●				7.5	5.0 (2.5)	●									●		●
	AFXUP†	●	<75	20♦		●			8.5*	7.0 (3.5)	●											●
	AFXUP-S†	●	<75	20♦		●			8.5*	7.0 (3.5)	●									●		●
	AFX24-SR	●	95	<20♦	●				8.5	5.5 (3.0)		●						●				●
	AFX24-SR-S	●	95	<20♦	●				8.5	5.5 (3.0)		●						●		●		●
	AFX24-MFT†	●	70…220 (150)	<20♦	●				10	7.5 (3.0)		●		●	●	●	●	●	●			●
	AFX24-MFT-S†	●	70…220 (150)	<20♦	●				10	7.5 (3.0)		●		●	●	●	●	●	●	●		●
	AFX24-MFT95†		70…220 (150)	<20♦	●				10	7.5 (3.0)			●					●	●			●
 **NFX Series** 90 in-lbs [10 Nm] Approx. 22 sq. ft.	NFX24	●	<75	20♦	●				8.5	6.0 (2.5)	●											●
	NFX24-S	●	<75	20♦	●				8.5	6.0 (2.5)	●									●		●
	NFXUP	●	<75	20♦		●			6.5	6.0 (2.5)	●											●
	NFXUP-S	●	<75	20♦		●			6.5	6.0 (2.5)	●									●		●
	NFX24-SR	●	95	<20♦	●				6	3.5 (2.5)		●						●				●
	NFX24-SR-S	●	95	<20♦	●				6	3.5 (2.5)		●						●		●		●
	NFX24-MFT	●	40…220 (150)	<20♦	●				9	6.5 (3.0)		●		●	●	●	●	●	●			●
	NFX24-MFT-S	●	40…220 (150)	<20♦	●				9	6.5 (3.0)		●		●	●	●	●	●	●	●		●
 **TFX Series** 22 in-lbs [2.5 Nm] Approx. 5.5 sq. ft.	TFX24	●	<75	<25♦	●				5	2.0 (1.3)	●											
	TFX24-S	●	<75	<25♦	●				5	2.0 (1.3)	●										●	
	TFX120	●	<75	<25♦			●	●	5	2.5 (1.3)	●											
	TFX120-S	●	<75	<25♦			●	●	5	2.0 (1.3)	●										●	
	TFX24-SR	●	95	<25♦	●				4	2.0 (1.0)		●						●				
	TFX24-SR-S	●	95	<25♦	●				4	2.0 (1.0)		●						●			●	
	TFX24-3	●	95	<25♦	●				4	2.5 (1.0)												
	TFX24-3-S	●	95	<25♦	●				4	2.5 (1.0)											●	
	TFX24-MFT	●	75…300 (150)	<25♦	●				4	2.5 (1.0)		●		●	●	●	●	●	●			
	TFX24-MFT-S	●	75…300 (150)	<25♦	●				4	2.5 (1.0)		●		●	●	●	●	●	●		●	

♦ <60 seconds @ -22°F [-30°C].

† Piggy back mounting on a single shaft: On/Off wired in parallel and -MFT (EFX and AFX only) wired master slave. Please call Belimo customer service for details.

* 8.5 VA for 120 VAC; 7 VA for 24 VAC, 18 VA for 240 VAC.

067001 - 04/13 - Subject to change. © Belimo Aircontrols (USA), Inc.

EF Series

Direct Coupled, Spring Return Damper Actuators, 270 in-lbs Minimum Torque

Actuator Specifications

Torque	270 in-lbs [30 Nm] minimum -22°F to +122°F [-30°C to +50°C] **N4H models:** -40°F to +122°F [-40°C to +50°C]
Angle of rotation♦	95°, adjustable with mechanical end stops MFT electronically variable 0-100%
Fits shaft diameter	1/2" to 1.05" (clamp centers on 3/4" and 1.05")
Position indication	Visual indicator
Manual override	5mm hex crank (3/16" allen), supplied
Direction of rotation♦	external switch with -SR and MFT
Spring return reversible	CW/CCW mounting
Dimensions	11.32" x 5.43" x 4.74" [287.5 x 138 x 120.5 mm] **N4, N4H models:** 13.54" x 5.43" x 4.74" [344 x 138 x 120.5 mm]
Electrical connection	3 ft., 18 GA appliance cable, ½" conduit fitting (default)
Overload protection	electronic throughout rotation
Auxiliary switch(es)	(-S) NEMA 2 models: 2 SPDT, 3A (0.5A inductive) @ 250V, one switch fixed at 10°, one adjustable 10° to 85°
Housing	NEMA 2/IP54, UL enclosure Type 2 **N4 models:** NEMA 4/IP66, Enclosure Type 4
Agency listings	cULus according to UL 60730-1A/-2-14, CAN/CSA E60730-1:02, CE according to 2004/108/EC and 2006/95/EC



EFB…
EFX…



EFB… N4
EFX… N4

MFT

MFT= 2-10 VDC Default, or Set, Modify, Read:

- **Control (PWM, VDC range, Floating Point)**
- **Feedback (0.5-10 VDC, 2-10 VDC, Variable)**
- **Motion (run time)**

All actuators have BDCM

‡‡ For applications that require more torque, EF Series can be tandem mounted. Two On/Off actuators for 540 in-lbs or up to three MFT actuators for 810 in-lbs

Spring Return Damper Actuators

Model	Control Input	Feedback	Power Supply	Running Time(s) M	Running Time(s) ♦♦	VA Rating	Auxiliary Switch	List Price	NEMA 4 Adder **
BASIC PRODUCTS ‡‡									
EFB24	On/Off	-	24 VAC/DC	75 seconds	<20 secs	16	-	$830.00	$150.00
EFB24-S	On/Off	-	24 VAC/DC	75 seconds	<20 secs	16	Built-in	$995.00	N/A
EFB120-S	On/Off	-	100-240 VAC	75 seconds	<20 secs	21	Built-in	$1,092.00	$150.00
EFB24-SR	2-10 VDC (4-20mA[Z])	2-10 VDC	24 VAC/DC	95 seconds	<20 secs	14	-	$1,036.00	$150.00
EFB24-MFT	2-10 VDC (4-20mA[Z])	2-10 VDC	24 VAC/DC	150 seconds	<20 secs	16	-	$1,141.00	N/A
EFB24-MFT-S	2-10 VDC (4-20mA[Z])	2-10 VDC	24 VAC/DC	150 seconds	<20 secs	16	Built-in	$1,304.00	N/A
STANDARD PRODUCTS ‡‡ **REORDER #**									
EFX120 EF650 1A1 003	On/Off	-	100-240 VAC	75 seconds	<20 secs	21	-	$929.00	N/A
EFX24-SR-S EF420 1A1 H01	2-10 VDC (4-20mA[Z])	2-10 VDC	24 VAC/DC	95 seconds	<20 secs	14	Built-in	$1,199.00	$150.00

♦ Variable with MFT. ♦♦ <60 seconds @ -22°F [-30°C].

* All NEMA 4 actuators come with a junction box for electrical connections. No cable options available.

**For NEMA 4, add "N4" to the end of part number. $150 list price adder for NEMA 4 option for select models above.

[Z] With 500 Ω resistor, ZG-R01.

067001 - 04/13 - Subject to change. © Belimo Aircontrols (USA), Inc.



EFB24-MFT

B = Basic stocked product

- Standard 150 second run time.
- Standard 1/2" to 1.05" clamp.
- Standard 3' appliance cable with conduit connector.

Typical Lead Time: 1 day

EFX24-MFT

X = Customizable product

- Choice of 10' or 16' cable with conduit connector.
- Factory programming for run time, control signal and feedback (MFT only).

Typical Lead Time: 3 days or less

Reorder number consists of options which differ from standard product. This number is printed on the actuator for easy re-ordering.
For example:

Reorder # for a EFX24-MFT-S N4 is: EFKL0100A01

4 No Charge
3 No Charge
2 No Charge
1 $1,454.00
$1,454.00 Final Price

1 ACTUATOR TYPE

TYPE	Power	Control Input	Switch	Code 1	List Price
EFX24	24V	On/Off	-	EF200	$830.00
EFX24-S	24V	On/Off	Built-in	EF220	$995.00
EFX24-S N4	24V	On/Off	Built-in	EFK60	$1,145.00
EFX24-S N4H*	24V	On/Off	Built-in	EFK70	$1,265.00
EFX120	120V	On/Off	-	EF650	$929.00
EFX120-S	120V	On/Off	Built-in	EF670	$1,092.00
EFX120-S N4	120V	On/Off	Built-in	EFK20	$1,242.00
EFX120-S N4H*	120V	On/Off	Built-in	EFK30	$1,362.00
EFX24-SR	24V	2-10 VDC	-	EF400	$1,036.00
EFX24-SR-S	24V	2-10 VDC	Built-in	EF420	$1,199.00
EFX24-SR-S N4	24V	2-10 VDC	Built-in	EFKE0	$1,349.00
EFX24-SR-S N4H*	24V	2-10 VDC	Built-in	EFKF0	$1,469.00
EFX24-MFT	24V	(see MFT label)	-	EF600	$1,141.00
EFX24-MFT-S	24V	(see MFT label)	Built-in	EF620	$1,304.00
EFX24-MFT-S N4	24V	(see MFT label)	Built-in	EFKL0	$1,454.00
EFX24-MFT-S N4H*	24V	(see MFT label)	Built-in	EFKM0	$1,574.00

2 MECHANICAL INTERFACE

TYPE	Size	Code 2	List Price
Standard Universal Clamp (default)	1/2" - 1.05"	1	No Charge

3 CABLES (EXCLUDES N4 MODELS, USE "00" FOR CODE 3)

SINGLE CABLE (with conduit fitting)	Size	Code 3	List Price
Plenum 24V (excludes -S models)	3 ft.	C1	No Charge
	10 ft.	C3	$28.00
	16 ft.	C5	$48.00
Appliance 24V and 120V	3 ft.	A1	No Charge
-S models have two cables	10 ft.	A3	$28.00
10 ft. cables: $50	16 ft.	A5	$48.00
16 ft. cables: $90			

4 PROGRAM (SELECTABLE ON MFT MODELS ONLY)

	Running Time	Control Input	Feedback	Code 4	List Price
All On/Off	75 seconds	On/Off	-	003	No Charge
All -SR	95 seconds	2-10 VDC	2-10 VDC	H01	No Charge
-MFT	150 seconds	2-10 VDC	2-10 VDC	A01	No Charge
	150 seconds	0.5-10 VDC	0.5-10 VDC	AC2	No Charge
	90 seconds	2-10 VDC	2-10 VDC	AC1	No Charge
	90 seconds	0.5-10 VDC	0.5-10 VDC	ACA	No Charge
	60 seconds	2-10 VDC	2-10 VDC	AEH	No Charge
	150 seconds	Floating Point	2-10 VDC	F01	No Charge
	90 seconds	Floating Point	2-10 VDC	F14	$34.00
	60 seconds	On/Off	2-10 VDC	J19	No Charge
	150 seconds	On/Off	0.5-10 VDC	J02	No Charge

Multi-Function Technology offers a wide variety of programmable control inputs and feedback signals. Parameters can be set for voltage control (VDC), time proportional control (PWM), floating point, on/off and feedback signal. Parameters can be changed on-site to optimize/enable application. You can also set, modify or read position, running time, mechanical working range, address, status, and diagnostics.

For additional MFT programming codes, refer to MFT technical documentation or visit www.belimo.us.
* NEMA 4 with heater option denoted by "N4H"

067001 - 04/13 - Subject to change. © Belimo Aircontrols (USA), Inc.

AF Series

Direct Coupled, Spring Return Damper Actuators, 180 in-lbs Minimum Torque

Actuator Specifications

Torque	180 in-lbs [20 Nm] minimum -22°F to +122°F [-30°C to +50°C]
Angle of rotation♦	95°, adjustable with mechanical end stops MFT electronically variable 0-100%
Fits shaft diameter	1/2" to 1.05" (clamp centers on 1/2", 3/4", and 1.05")
Position indication	visual indicator
Manual override	5mm hex crank (3/16" allen), supplied
Direction of rotation♦	external switch with -SR and MFT
Spring return reversible	CW/CCW mounting
Dimensions	9.69" x 3.86" x 3.42" [246.1 x 98 x 86.9 mm]
Electrical connection	3 ft., 18 GA appliance cable, ½" conduit fitting (default)
Overload protection	electronic throughout rotation
Auxiliary switch(es)	(-S) models: 2 SPDT, 3A (0.5A inductive) @ 250V, one switch fixed at 10°, one adjustable 10° to 90°
Housing	NEMA 2/IP54, UL enclosure Type 2
Agency listings	cULus according to UL 60730-1A/-2-14, CAN/CSA E60730-1:02, CE according to 2004/108/EC and 2006/95/EC



AFB24-MFT

ATTENTION: New generation AF... **CANNOT** be tandem mounted with any classic AF... US in any configuration. Same generation actuators must be used for multiple actuator applications.

MFT

MFT= 2-10 VDC Default, or Set, Modify, Read:

- **Control (PWM, VDC range, Floating Point)**
- **Feedback (0.5-10 VDC, 2-10 VDC, Variable)**
- **Motion (run time)**

All actuators have BDCM

5 YEAR WARRANTY

Spring Return Damper Actuators

Model	Control Input	Feedback	Power Supply	Running Time(s) M	Running Time(s) ♦♦	VA Rating	Auxiliary Switch	List Price
BASIC PRODUCTS‡‡								
AFB24	On/Off	-	24 VAC/DC	<75 seconds	20 secs	7.5	-	$472.00
AFB24-S	On/Off	-	24 VAC/DC	<75 seconds	20 secs	7.5	Built-in	$564.00
AFBUP	On/Off	-	24-240 VAC[u]	<75 seconds	20 secs	8.5**	-	$528.00
AFBUP-S	On/Off	-	24-240 VAC[u]	<75 seconds	20 secs	8.5**	Built-in	$621.00
AFB24-SR	2-10 VDC (4-20mA[Z])	2-10 VDC	24 VAC/DC	95 seconds	<20 secs	8.5	-	$588.00
AFB24-SR-S	2-10 VDC (4-20mA[Z])	2-10 VDC	24 VAC/DC	95 seconds	<20 secs	8.5	Built-in	$679.00
AFB24-PC	0-10 V Phasecut	2-10 VDC	24 VAC/DC	150 seconds	<20 secs	10	-	$737.00
AFB24-MFT	2-10 VDC (4-20mA[Z])	2-10 VDC	24 VAC/DC	150 seconds	<20 secs	10	-	$648.00
AFB24-MFT-S	2-10 VDC (4-20mA[Z])	2-10 VDC	24 VAC/DC	150 seconds	<20 secs	10	Built-in	$742.00
AFB24-MFT95	0 to 135 Ω*	2-10 VDC	24 VAC/DC	150 seconds	<20 secs	10	-	$671.00

♦ Variable with MFT. ♦♦ <60 seconds @ -22°F [-30°C]. [u] 24 to 125 VDC. [Z] With 500 Ω resistor, ZG-R01.

‡‡ For applications that require more torque, certain AFB, AFX Series can be tandem mounted. A maximum of two AFB24/AFX24... or AFBUP/AFXUP… for loads of up to 266 in-lbs OR three AFB24-MFT/AFX24-MFT... for loads of up to 432 in-lbs can be mechanically connected to one damper or valve shaft. **AFB24-SR/AFX24-SR… CANNOT be tandem mounted.**

* Fixed input.

** For 120 VAC; 7 VA for 24 VAC, 18 VA for 240 VAC.

For NEMA 4 models, see page 1-14.

067001 - 04/13 - Subject to change. © Belimo Aircontrols (USA), Inc.



AFB24-MFT
B = Basic stocked product

- Standard 150 second run time.
- Standard 1/2" to 1.05" clamp.
- Standard 3' appliance cable with conduit connector.

Typical Lead Time: 1 day

AFX24-MFT
X = Customizable product

- Choice of 10' or 16' cable with conduit connector.
- Choice of mechanical interface.
- Factory programming for run time, control signal and feedback (MFT only).

Typical Lead Time: 3 days or less

Reorder number consists of options which differ from standard product. This number is printed on the actuator for easy re-ordering.
For example:

Reorder # for a AFX24-MFT is: AF6001A5A01

4 No Charge
3 $48.00
2 No Charge
1 $648.00
$696.00 Final Price

1 ACTUATOR TYPE

TYPE	Power	Control Input	Switch	Code 1	List Price
AFX24	24V	On/Off	-	AF200	$472.00
AFX24-S	24V	On/Off	Built-in	AF220	$564.00
AFXUP	24-240V	On/Off	-	AF000	$528.00
AFXUP-S	24-240V	On/Off	Built-in	AF020	$621.00
AFX24-SR	24V	2-10 VDC	-	AF400	$588.00
AFX24-SR-S	24V	2-10 VDC	Built-in	AF420	$679.00
AFX24-MFT	24V	(see MFT label)	-	AF600	$648.00
AFX24-MFT-S	24V	(see MFT label)	Built-in	AF620	$742.00
AFX24-MFT95	24V	0-135 Ω	-	AFE10	$671.00

2 MECHANICAL INTERFACE (EXCLUDES N4 MODELS)

TYPE	Size	Code 2	List Price
No Clamp	-	0	No Charge
Standard Universal Clamp	1/2" - 1.05"	1	No Charge
Crankarm	-	8	$2.00

3 CABLES

SINGLE CABLE (with conduit fitting)	Size	Code 3	List Price
Plenum 24V (excludes -S models)	3 ft.*	C1	No Charge
	10 ft.	C3	$28.00
	16 ft.	C5	$48.00
Appliance 24V and 120V	3 ft.	A1	No Charge
-S models have two cables 10 ft. cables: $50 16 ft. cables: $90	10 ft.	A3	$28.00
	16 ft.	A5	$48.00

* Only option for MFT95

4 PROGRAM (SELECTABLE ON MFT MODELS ONLY)

	Running Time	Control Input	Feedback	Code 4	Price List
All On/Off	<75 seconds	On/Off	-	003	No Charge
All -SR	95 seconds	2-10 VDC	2-10 VDC	H01	No Charge
-MFT	150 seconds	2-10 VDC	2-10 VDC	A01	No Charge
	150 seconds	0.5-10 VDC	0.5-10 VDC	AC2	No Charge
	90 seconds	2-10 VDC	2-10 VDC	AC1	No Charge
	90 seconds	0.5-10 VDC	0.5-10 VDC	ACA	No Charge
	70 seconds	2-10 VDC	2-10 VDC	ADW	No Charge
	150 seconds	Floating Point	2-10 VDC	F01	No Charge
	90 seconds	Floating Point	2-10 VDC	F14	$34.00
	75 seconds	On/Off	2-10 VDC	J01	$34.00
	150 seconds	On/Off	0.5-10 VDC	J02	No Charge

Multi-Function Technology offers a wide variety of programmable control inputs and feedback signals. Parameters can be set for voltage control (VDC), time proportional control (PWM), floating point, on/off and feedback signal. Parameters can be changed on-site to optimize/enable application. You can also set, modify or read position, running time, mechanical working range, address, status, and diagnostics.

For additional MFT programming codes, refer to MFT technical documentation or visit www.belimo.us.

067001 - 04/13 - Subject to change. © Belimo Aircontrols (USA), Inc.

NF Series

Direct Coupled, Spring Return Damper Actuators, 90 in-lbs Minimum Torque

BELIMO

Actuator Specifications

Torque	90 in-lbs [10 Nm] minimum -22°F to +122°F [-30°C to +50°C]
Angle of rotation♦	95°, adjustable with mechanical end stops MFT electronically variable 0-100%
Fits shaft diameter	1/2" to 1.05" (clamp centers on 1/2", 3/4", and 1.05")
Position indication	visual indicator
Manual override	5mm hex crank (3/16" allen), supplied
Direction of rotation♦	external switch with -SR and MFT
Spring return reversible	CW/CCW mounting
Dimensions	9.69" x 3.86" x 3.42" [246.1 x 98 x 86.9 mm]
Electrical connection	3 ft., 18 GA appliance cable, ½" conduit fitting (default)
Overload protection	electronic throughout rotation
Auxiliary switch(es)	(-S) models: 2 SPDT, 3A (0.5A inductive) @ 250V, one switch fixed at 10°, one adjustable 10° to 90°
Housing	NEMA 2/IP54, UL enclosure Type 2
Agency listings	cULus according to UL 60730-1A/-2-14, CAN/CSA E60730-1:02, CE according to 2004/108/EC and 2006/95/EC



NFB24-SR

MFT

MFT= 2-10 VDC Default, or Set, Modify, Read:

- **Control (PWM, VDC range, Floating Point)**
- **Feedback (0.5-10 VDC, 2-10 VDC, Variable)**
- **Motion (run time)**

Actuators in bold have BDCM

CE LISTED 94 D5 TEMP. IND. & REG. EQUIP. c UL us

5 YEAR WARRANTY

Spring Return Damper Actuators

Model	Control Input	Feedback	Power Supply	Running Time(s)		VA Rating	Auxiliary Switch	List Price
				Ⓜ	♦♦			
BASIC PRODUCTS								
NFB24	On/Off	-	24 VAC/DC	<75 seconds	20 secs	8.5	-	$387.00
NFB24-S	On/Off	-	24 VAC/DC	<75 seconds	20 secs	8.5	Built-in	$479.00
NFBUP	On/Off	-	24-240 VAC[u]	<75 seconds	20 secs	6.5	-	$437.00
NFBUP-S	On/Off	-	24-240 VAC[u]	<75 seconds	20 secs	6.5	Built-in	$530.00
NFB24-SR	2-10 VDC (4-20mA*)	2-10 VDC	24 VAC/DC	95 seconds	<20 secs	6	-	$515.00
NFB24-SR-S	2-10 VDC (4-20mA*)	2-10 VDC	24 VAC/DC	95 seconds	<20 secs	6	Built-in	$608.00
NFB24-MFT	2-10 VDC (4-20mA*)	2-10 VDC	24 VAC/DC	150 seconds	<20 secs	9	-	$574.00
NFB24-MFT-S	2-10 VDC (4-20mA*)	2-10 VDC	24 VAC/DC	150 seconds	<20 secs	9	Built-in	$667.00

♦ Variable with MFT. ♦♦ <60 seconds @ -22°F [-30°C].

[u] 24 to 125 VDC.

* With 500 Ω resistor, ZG-R01.

For NEMA 4 models, see page 1-15.

067001 - 04/13 - Subject to change. © Belimo Aircontrols (USA), Inc.



NFB24-MFT

B = Basic stocked product

- Standard 150 second run time.
- Standard 1/2" to 1.05" clamp.
- Standard 3' appliance cable with conduit connector.

Typical Lead Time: 1 day

NFX24-MFT

X = Customizable product

- Choice of 10' or 16' cable with conduit connector.
- Choice of mechanical interface.
- Factory programming for run time, control signal and feedback (MFT only).

Typical Lead Time: 3 days or less

Reorder number consists of options which differ from standard product. This number is printed on the actuator for easy re-ordering.
For example:

Reorder # for a NFX24-MFT-S is: NF620 1 A3 A01

4 No Charge
3 $50.00
2 No Charge
1 $667.00
$717.00 Final Price

1 ACTUATOR TYPE

TYPE	Power	Control Input	Switch	Code 1	List Price
NFX24	24V	On/Off	-	NF200	$387.00
NFX24-S	24V	On/Off	Built-in	NF220	$479.00
NFXUP	24-240V	On/Off	-	NF000	$437.00
NFXUP-S	24-240V	On/Off	Built-in	NF020	$530.00
NFX24-SR	24V	2-10 VDC	-	NF400	$515.00
NFX24-SR-S	24V	2-10 VDC	Built-in	NF420	$608.00
NFX24-MFT	24V	(see MFT label)	-	NF600	$574.00
NFX24-MFT-S	24V	(see MFT label)	Built-in	NF620	$667.00

2 MECHANICAL INTERFACE (EXCLUDES N4 MODELS)

TYPE	Size	Code 2	List Price
No Clamp	-	0	No Charge
Standard Universal Clamp	1/2" - 1.05"	1	No Charge
Crankarm	-	8	$2.00

3 CABLES

SINGLE CABLE (with conduit fitting)	Size	Code 3	List Price
Plenum 24V (excludes -S models)	3 ft.	C1	No Charge
	10 ft.	C3	$28.00
	16 ft.	C5	$48.00
Appliance 24V and 120V	3 ft.	A1	No Charge
-S models have two cables 10 ft. cables: $50 16 ft. cables: $90	10 ft.	A3	$28.00
	16 ft.	A5	$48.00

4 PROGRAM (SELECTABLE ON MFT MODELS ONLY)

	Running Time	Control Input	Feedback	Code 4	List Price
All On/Off	<75 seconds	On/Off	-	003	No Charge
All -SR	95 seconds	2-10 VDC	2-10 VDC	H01	No Charge
-MFT	150 seconds	2-10 VDC	2-10 VDC	A01	No Charge
	150 seconds	0.5-10 VDC	0.5-10 VDC	AC2	No Charge
	90 seconds	2-10 VDC	2-10 VDC	AC1	No Charge
	90 seconds	0.5-10 VDC	0.5-10 VDC	ACA	No Charge
	70 seconds	2-10 VDC	2-10 VDC	ADW	No Charge
	40 seconds	2-10 VDC	2-10 VDC	ADX	No Charge
	150 seconds	Floating Point	2-10 VDC	F01	No Charge
	45 seconds	Floating Point	2-10 VDC	F19	No Charge
	75 seconds	On/Off	2-10 VDC	J01	$34.00
	150 seconds	On/Off	0.5-10 VDC	J02	No Charge

Multi-Function Technology offers a wide variety of programmable control inputs and feedback signals. Parameters can be set for voltage control (VDC), time proportional control (PWM), floating point, on/off and feedback signal. Parameters can be changed on-site to optimize/enable application. You can also set, modify or read position, running time, mechanical working range, address, status, and diagnostics.

For additional MFT programming codes, refer to MFT technical documentation or visit www.belimo.us.

067001 - 04/13 - Subject to change. © Belimo Aircontrols (USA), Inc.

Get up and running in record time.





The ZG-JSL can be used with the EF actuator series by attaching the ZG-121 support plate. (NEMA 4 models excluded.)

The quickest install designed with ease in mind.

The ZG-JSL linkage is designed to simplify the attachment of select Belimo actuators to a damper's jackshaft. The unique open ended design allows the linkage to clamp on to any part of a jackshaft measuring from 1/2" to 1.05" in diameter.

Saves time and cost

The ZG-JSL linkage simplifies typical installations and eliminates the difficulties where jackshaft bearings are hard to access. Belimo has simplified installing actuators onto jackshafts, reducing installation time translating into a cost savings. Now with the ZG-JSL linkage, jackshaft installations are done in minutes!

Ideal for tight spaces

The ZG-JSL linkage has a built-in shaft which allows the direct coupling of Belimo actuators. The anti-rotation plate enables the installed actuator to be rotated 90 degrees for space saving applications.

067001 - 04/13 - Subject to change. © Belimo Aircontrols (USA), Inc.

Actuator Specifications

Torque	35 in-lbs [4 Nm] minimum -22°F to +122°F [-30°C to +50°C]
Angle of rotation♦	95°, adjustable with mechanical end stops MFT electronically variable 0-100%
Fits shaft diameter	3/8"-1/2" standard (centers on 1/2"); 1/2"-3/4" with K6-1 clamp accessory
Position indication	visual indicator
Direction of rotation♦	CW/CCW external switch (proportional models) electronically selectable with MFT
Spring return reversible	CW/CCW mounting
Dimensions	7.67" x 3.86" x 3.23" [195 x 98 x 82mm]
Electrical connection	3 ft., 18 GA plenum cable (modulating), 3 ft., 18 GA appliance cable (on/off, MFT, -S types), 1/2" conduit fitting
Overload protection	electronic throughout rotation
Auxiliary switch	(-S) models: 1 SPDT, 3A (0.5 A inductive) @ 250V adjustable 0° to 95°
Housing	NEMA 2 (IP54) any orientation
Agency listings	cULus according to UL 873 and CAN/CSA C22.2 No. 24-93



LF24-SR US

MFT

MFT=2-10 VDC Default, or Set, Modify, Read:

- **Control (PWM, VDC range, Floating Point)**
- **Feedback (0.5-10, 0.5-5 VDC)**
- **Motion (run time)**

Actuators in bold have BDCM

LISTED 94 D5 TEMP. IND. & REG. EQUIP.

5 YEAR WARRANTY

Spring Return Damper Actuators

Model	Control Input	Feedback	Power Supply	Running Time(s)		VA Rating	Aux. Switch	List Price
				Ⓜ	♦♦			
BASIC PRODUCTS								
LF24 US	On/Off	—	24 VAC/DC	<40-75 secs	<25 seconds	7	—	$325.00
LF24-S US	On/Off	—	24 VAC/DC	<40-75 secs	<25 seconds	7	Built-in	$384.00
LF120 US	On/Off	—	120 VAC	<40-75 secs	<25 seconds	7.5	—	$360.00
LF120-S US	On/Off	—	120 VAC	<40-75 secs	<25 seconds	7.5	Built-in	$418.00
LF230 US	On/Off	—	230 VAC	<40-75 secs	<25 seconds	7	—	$446.00
LF230-S US	On/Off	—	230 VAC	<40-75 secs	<25 seconds	7	Built-in	$504.00
LF24-SR US	2-10 VDC (4-20 mA*)	2-10 VDC	24 VAC/DC	150 seconds	<25 seconds	5	—	$446.00
LF24-SR-S US	2-10 VDC (4-20 mA*)	2-10 VDC	24 VAC/DC	150 seconds	<25 seconds	5	Built-in	$504.00
LF24-SR-E US	2-10 VDC, Built-In Minimum Position	2-10 VDC	24 VAC/DC	150 seconds	<25 seconds	5	—	$480.00
LF24-3 US	Floating Point	—	24 VAC/DC	150 seconds	<25 seconds	5	—	$396.00
LF24-3-S US	Floating Point	—	24 VAC/DC	150 seconds	<25 seconds	5	Built-in	$454.00
LF24-ECON-R03 US	3 kΩ Type 10 Thermistor	2-10 VDC	24 VAC/DC	95 seconds	<25 seconds	5	—	$504.00
LFC24-3-R US	Floating Point	—	24 VAC/DC	90 seconds	<25 seconds	5	—	$446.00
LFC24-3-S US	Floating Point	—	24 VAC/DC	90 seconds	<25 seconds	5	Built-in	$504.00
CUSTOMIZE IT**								
LF24-MFT US	Variable with MFT, (VDC, PWM, Floating Point, On/Off)	Variable VDC	24 VAC/DC	Variable with MFT (150 secs default)	<25 seconds	5	—	$504.00
LF24-MFT-S US	Variable with MFT, (VDC, PWM, Floating Point, On/Off)	Variable VDC	24 VAC/DC	Variable with MFT (150 secs default)	<25 seconds	5	Built-in	$562.00
LF24-MFT-20 US	6-9 VDC †	Variable VDC	24 VAC/DC	Variable with MFT (150 secs default)	<25 seconds	6	—	$562.00
LF24-MFT-S-20 US	6-9 VDC †	Variable VDC	24 VAC/DC	Variable with MFT (150 secs default)	<25 seconds	6	Built-in	$657.00

♦ Variable with MFT. ♦♦ <60 seconds @ -22°F [-30°C].

*With 500 Ω resistor, ZG-R01.

**LF24-MFT US is the basic model. Add the P… pre-set MFT configuration number and list price to the actuator when ordering, (i.e.: LF24-MFT US + P-10002). Refer to MFT technical documentation or visit www.belimo.us for P-Codes.

† With 20 VDC fixed output voltage.

LFC24-3-R US with ZG-LFC114 universal mounting bracket are for Trane Voyager retrofit.

067001 - 04/13 - Subject to change. © Belimo Aircontrols (USA), Inc.

TF Series

Direct Coupled Spring Return Damper Actuators, 22 in-lbs Minimum Torque

Actuator Specifications

Torque	22 in-lbs [2.5 Nm] minimum -22°F to +122°F [-30°C to +50°C]
Angle of rotation♦	95°, adjustable with mechanical end stops MFT electronically variable 0-100%
Overload protection	electronic throughout rotation
Fits shaft diameter	¼"- ½" (centers on ½")
Position indication	visual indicator
Direction of rotation♦	CW/CCW external switch (proportional models)
Spring return reversible	CW/CCW mounting
Dimensions	6.28" x 3.0" x 3.30" [159.5 x 76.2 x 83.72 mm]
Electrical connection	3 ft., 18 GA plenum cable (modulating), 3 ft., 18 GA appliance cable (on/off, -S types), 1/2" conduit fitting
Auxiliary switch	(-S) models: 1 SPDT, 3 A (0.5 A inductive) @ 250V adjustable 0° to 95°
Housing	NEMA 2 (IP42), UL enclosure Type 2, any orientation
Agency listings	cULus according to UL60730-1A/-2-14, CAN/CSA E60730-1:02, CE according to 2004/108/EC and 2006/95/EC



TFLB120

MFT

MFT=2-10 VDC Default, or Set, Modify, Read:

- **Control (PWM, VDC range, Floating Point)**
- **Feedback (0.5-10, 0.5-5 VDC)**
- **Motion (run time)**

Actuators in bold have BDCM

LISTED 94 D5 TEMP. IND. & REG. EQUIP.

5 YEAR WARRANTY

Model	Control Input	Feedback	Power Supply	Running Time(s)		VA Rating	Aux. Switch	List Price
				Ⓜ	♦♦			
BASIC PRODUCTS								
TFB24	On/Off	—	24 VAC/DC	<75 seconds	<25 seconds	5	—	$269.00
TFB24-S	On/Off	—	24 VAC/DC	<75 seconds	<25 seconds	5	Built-in	$325.00
TFLB24	On/Off	—	24 VAC/DC	<75 seconds	<75 seconds	5	—	$269.00
TFB120	On/Off	—	100-240 VAC	<75 seconds	<25 seconds	5	—	$314.00
TFB120-S	On/Off	—	100-240 VAC	<75 seconds	<25 seconds	5	Built-in	$370.00
TFLB120	On/Off	—	100-240 VAC	<75 seconds	<75 seconds	5	—	$314.00
TFCB120-S	On/Off	—	100-240 VAC	<30 seconds	<25 seconds	6	Built-in	$390.00
TFB24-SR	2-10 VDC (4-20 mA*)	2-10 VDC	24 VAC/DC	95 seconds	<25 seconds	4	—	$384.00
TFB24-SR-S	2-10 VDC (4-20 mA*)	2-10 VDC	24 VAC/DC	95 seconds	<25 seconds	4	Built-in	$440.00
TFB120-SR	2-10 VDC (4-20 mA*)	2-10 VDC	100-240 VAC	95 seconds	<25 seconds	5.5	—	$428.00
TFB24-3	Floating Point	—	24 VAC/DC	95 seconds	<25 seconds	4	—	$352.00
TFB24-3-S	Floating Point	—	24 VAC/DC	95 seconds	<25 seconds	4	Built-in	$408.00
TFB24-MFT	2-10 VDC (4-20 mA*)	2-10 VDC	24 VAC/DC	150 seconds	<25 seconds	4	—	$446.00
TFB24-MFT-S	2-10 VDC (4-20 mA*)	2-10 VDC	24 VAC/DC	150 seconds	<25 seconds	4	Built-in	$507.00

♦Variable with MFT.
♦♦ <60 seconds @ -22°F [-30°C], except TFLB models.
* With 500 Ω resistor, ZG-R01.

067001 - 04/13 - Subject to change. © Belimo Aircontrols (USA), Inc.



TFB24-MFT

B = Basic stocked product

- Standard 150 second run time.
- Standard 1/4" to 1/2" clamp.
- Standard 3' plenum cable with conduit connector.

Typical Lead Time: 1 day

TFX24-MFT

X = Customizable product

- Choice of 10' or 16' cable with conduit connector.
- Choice of mechanical interface.
- Factory programming for run time, control signal and feedback (MFT only).

Typical Lead Time: 3 days or less

Reorder number consists of options which differ from standard product. This number is printed on the actuator for easy re-ordering.
For example:

Reorder # for a TFX24-MFT is: TF9501C1A01

4 No Charge
3 No Charge
2 No Charge
1 $446.00

$446.00 Final Price

1 ACTUATOR TYPE

TYPE	Power	Control Input	Switch	Code 1	List Price
TFX24	24V	On/Off	-	TF200	$269.00
TFX24-S	24V	On/Off	Built-in	TF210	$325.00
TFX120	100-240V	On/Off	-	TF650	$314.00
TFX120-S	100-240V	On/Off	Built-in	TF660	$370.00
TFCX120-S	100-240V	On/Off	Built-in	TF2D0	$390.00
TFX24-3	24V	Floating Point	-	TFB10	$352.00
TFX24-3-S	24V	Floating Point	Built-in	TFB20	$408.00
TFX24-SR	24V	2-10 VDC	-	TF400	$384.00
TFX24-SR-S	24V	2-10 VDC	Built-in	TF410	$440.00
TFX24-MFT	24V	(see MFT label)	-	TF950	$446.00
TFX24-MFT-S	24V	(see MFT label)	Built-in	TF9A0	$507.00

2 MECHANICAL INTERFACE

TYPE	Size	Code 2	List Price
No Clamp	-	0	No Charge
Standard Clamp	1/4" - 1/2"	1	No Charge

3 CABLES

SINGLE CABLE (with conduit fitting)	Size	Code 3	List Price
Plenum 24V (excludes -S models) default cable for -3, -SR and -MFT models	3 ft.	C1	No Charge
	10 ft.	C3	$28.00
	16 ft.	C5	$48.00
Appliance 24V and 120V default cable for on/off and -S models	3 ft.	A1	No Charge
-S models have two cables 10 ft. cables: $50 16 ft. cables: $90	10 ft.	A3	$28.00
	16 ft.	A5	$48.00

4 PROGRAM (SELECTABLE ON MFT MODELS ONLY)

	Running Time	Control Input	Feedback	Code 4	List Price
All On/Off	<75 seconds	On/Off	-	003	No Charge
TFCX only	<30 seconds	On/Off	-	013	No Charge
All -3	95 seconds	Floating Point	-	H34	No Charge
All -SR	95 seconds	2-10 VDC	2-10 VDC	H01	No Charge
-MFT	150 seconds	2-10 VDC	2-10 VDC	A01	No Charge
	150 seconds	0.5-10 VDC	0.5-10 VDC	AC2	No Charge
	90 seconds	2-10 VDC	2-10 VDC	AC1	No Charge
	90 seconds	0.5-10 VDC	0.5-10 VDC	ACA	No Charge
	150 seconds	Floating Point	2-10 VDC	F01	No Charge
	90 seconds	Floating Point	2-10 VDC	F14	$34.00
	75 seconds	Floating Point	0.5-10 VDC	F11	$34.00
	75 seconds	On/Off	2-10 VDC	J01	$34.00
	150 seconds	On/Off	0.5-10 VDC	J02	No Charge

Multi-Function Technology offers a wide variety of programmable control inputs and feedback signals. Parameters can be set for voltage control (VDC), time proportional control (PWM), floating point, on/off and feedback signal. Parameters can be changed on-site to optimize/enable application. You can also set, modify or read position, running time, mechanical working range, address, status, and diagnostics.

For additional MFT programming codes, refer to MFT technical documentation or visit www.belimo.us.

067001 - 04/13 - Subject to change. © Belimo Aircontrols (USA), Inc.

AF Series with NEMA 4 Housing

Direct Coupled Spring Return Damper Actuators

BELIMO

Actuator Specifications

Torque	180 in-lbs [20 Nm] minimum -22°F to +122°F [-30°C to +50°C] **N4H models:** -49°F to +122°F [-45°C to +50°C]
Angle of rotation♦	95°, adjustable with mechanical end stops MFT electronically variable 0-100%
Fits shaft diameter	1/2" to 1.05" (clamp centers on 3/4" and 1.05")
Position indication	visual indicator
Manual override	5mm hex crank (3/16"allen), supplied
Direction of rotation♦	external switch electronically selectable with MFT
Spring return reversible	CW/CCW mounting
Dimensions	12.5" x 6.25" x 7.25" [318 x 159 x 184 mm]
Electrical connection	3 ft., 18 GA appliance cable, ½" conduit fitting (default)
Overload protection	electronic throughout rotation
Auxiliary switch	(-S) models: 2 SPDT, 3A (0.5A inductive) @ 250V, one switch fixed at 10°, one adjustable 10° to 90°
Housing	NEMA 4/IP66, UL enclosure Type 4
Agency listings	cULus according to UL 60730-1A/-2-14, CAN/CSA E60730-1:02, CE according to 2004/108/EC and 2006/95/EC

♦ Variable with MFT



NEMA 4 Housing

MFT

MFT=2-10 VDC Default, or Set, Modify, Read:

- **Control (PWM, VDC range, Floating Point)**
- **Feedback (0.5-10, 0.5-5 VDC)**
- **Motion (run time)**

Actuators in bold have BDCM

LISTED 94 D5 TEMP. IND. & REG. EQUIP.

5 YEAR WARRANTY

Spring Return Damper Actuators

Model	Control Input	Feedback	Power Supply	Running Time(s) M	Running Time(s) ♦♦	VA Rating	Auxiliary Switch	List Price	Heater Adder ***
BASIC PRODUCTS									
AFB24 N4	On/Off	-	24 VAC/DC	<75 seconds	20 seconds	7.5	-	$1,018.00	$1,002.00
AFB24-S N4	On/Off	-	24 VAC/DC	<75 seconds	20 seconds	7.5	Built-in	$1,110.00	$1,002.00
AFBUP N4	On/Off	-	24-240 VAC[u]	<75 seconds	20 seconds	9.5	-	$1,074.00	$1,002.00
AFBUP-S N4	On/Off	-	24-240 VAC[u]	<75 seconds	20 seconds	9.5	Built-in	$1,167.00	$1,002.00
AFB24-SR N4	2-10 VDC	2-10 VDC	24 VAC/DC	95 seconds	<20 seconds	8.5	-	$1,134.00	$1,002.00
AFB24-SR-S N4	2-10 VDC	2-10 VDC	24 VAC/DC	95 seconds	<20 seconds	8.5	Built-in	$1,225.00	$1,002.00
AFB24-MFT N4	2-10 VDC	2-10 VDC	24 VAC/DC	150 seconds	<20 seconds	10	-	$1,194.00	$1,002.00
AFB24-MFT-S N4	2-10 VDC	2-10 VDC	24 VAC/DC	150 seconds	<20 seconds	10	Built-in	$1,288.00	$1,002.00
AFB24-MFT95 N4	0 to 135 Ω*	2-10 VDC	24 VAC/DC	150 seconds	<20 seconds	10	-	$1,217.00	$1,002.00
CUSTOMIZE IT‡‡ **REORDER #**									
AFX24 N4 AFG200 1A1 003P	On/Off	-	24 VAC/DC	<75 seconds	20 seconds	7.5	-	$1,018.00 ‡	N/A
AFX24-S N4 AFG220 1A1 003P	On/Off	-	24 VAC/DC	<75 seconds	20 seconds	7.5	Built-in	$1,110.00 ‡	N/A
AFXUP N4 AFG000 1A1 003P	On/Off	-	24-240 VAC[u]	<75 seconds	20 seconds	9.5	-	$1,074.00 ‡	N/A
AFXUP-S N4 AFG020 1A1 003P	On/Off	-	24-240 VAC[u]	<75 seconds	20 seconds	9.5	Built-in	$1,167.00 ‡	N/A
AFX24-SR N4 AFG400 1A1 H01P	2-10 VDC	2-10 VDC	24 VAC/DC	95 seconds	<20 seconds	8.5	-	$1,134.00 ‡	N/A
AFX24-SR-S N4 AFG420 1A1 H01P	2-10 VDC	2-10 VDC	24 VAC/DC	95 seconds	<20 seconds	8.5	Built-in	$1,225.00 ‡	N/A
AFX24-MFT N4 AFG600 1A1 A01P**	Variable with MFT (VDC, PWM, Floating Point, On/Off)	Variable VDC	24 VAC/DC	70 to 220 seconds (150 default)	<20 seconds	10	-	$1,194.00 ‡	N/A
AFX24-MFT-S N4 AFG620 1A1 A01P**	Variable with MFT (VDC, PWM, Floating Point, On/Off)	Variable VDC	24 VAC/DC	70 to 220 seconds (150 default)	<20 seconds	10	Built-in	$1,288.00 ‡	N/A
AFX24-MFT95 N4 AFGE10 1C1 R01P**	0 to 135 Ω*	Variable VDC	24 VAC/DC	70 to 220 seconds (150 default)	<20 seconds	10	-	$1,217.00 ‡	N/A

♦ Variable with MFT. ♦♦<60 seconds @ -22°F [-30°C]. **u 24 to 125 VDC.**

‡ Prices do not reflect MFT programming code surcharge and/or custom options. Price shown is for default cable, running times and control inputs (if applicable). Refer to product pages for custom options and reorder numbers.

Note: 10 ft. and 16 ft. cables available on all AFX models except for MFT95 and models with heaters; list price adder to 3 ft. cable versions are: 10 ft.: $28 for single cable and $50 for ..-S; 16 ft.: $48 for single cable and $90 for ..-S.

‡‡ For applications that require more torque, refer to AF Series product pages for possible combinations and torque loading.

* Fixed input.

**The P-Code programs the actuator for the desired Control Input, Feedback & Running Time. Refer to page 1-7.

***** Heater option: add "H" to the end of "N4", for example AFB24-MFT N4H. $1,002.00 list price adder for select NEMA 4 models above.**

All AF NEMA 4 models are configured for a CCW spring return rotation. For CW spring return rotation, field reconfiguration is needed.

067001 - 04/13 - Subject to change. © Belimo Aircontrols (USA), Inc.

Actuator Specifications

Torque	90 in-lbs [10 Nm] minimum -22°F to +122°F [-30°C to +50°C] **N4H models:** -49°F to +122°F [-45°C to +50°C]
Angle of rotation♦	95°, adjustable with mechanical end stops MFT electronically variable 0-100%
Fits shaft diameter	1/2" to 1.05" (clamp centers on 3/4", and 1.05")
Position indication	visual indicator
Manual override	5mm hex crank (3/16" allen), supplied
Direction of rotation♦	external switch electronically selectable with MFT
Spring return reversible	CW/CCW mounting
Dimensions	12.5" x 6.25" x 7.25" [318 x 159 x 184 mm]
Electrical connection	3 ft., 18 GA appliance cable, ½" conduit fitting (default)
Overload protection	electronic throughout rotation
Auxiliary switch	(-S) models: 2 SPDT, 3A (0.5A inductive) @ 250V, one switch fixed at 10°, one adjustable 10° to 90°
Housing	NEMA 4/IP66, UL enclosure Type 4
Agency listings	cULus according to UL 60730-1A/-2-14, CAN/CSA E60730-1:02, CE according to 2004/108/EC and 2006/95/EC



NEMA 4 Housing

MFT

MFT=2-10 VDC Default, or Set, Modify, Read:

- **Control (PWM, VDC range, Floating Point)**
- **Feedback (0.5-10, 0.5-5 VDC)**
- **Motion (run time)**

Actuators in bold have BDCM

LISTED 94 D5 TEMP. IND. & REG. EQUIP. c UL us

5 YEAR WARRANTY

Spring Return Damper Actuators

Model		Control Input	Feedback	Power Supply	Running Time(s) Ⓜ	Running Time(s) ♦♦	VA Rating	Auxiliary Switch	List Price	Heater Adder ***
BASIC PRODUCTS										
NFB24 N4		On/Off	-	24 VAC/DC	<75 seconds	20 seconds	7.5	-	$933.00	$1,002.00
NFB24-S N4		On/Off	-	24 VAC/DC	<75 seconds	20 seconds	7.5	Built-in	$1,025.00	$1,002.00
NFBUP N4		On/Off	-	24-240 VAC[u]	<75 seconds	20 seconds	6.5	-	$983.00	$1,002.00
NFBUP-S N4		On/Off	-	24-240 VAC[u]	<75 seconds	20 seconds	6.5	Built-in	$1,076.00	$1,002.00
NFB24-SR N4		2-10 VDC	2-10 VDC	24 VAC/DC	95 seconds	<20 seconds	8.5	-	$1,061.00	$1,002.00
NFB24-SR-S N4		2-10 VDC	2-10 VDC	24 VAC/DC	95 seconds	<20 seconds	8.5	Built-in	$1,154.00	$1,002.00
NFB24-MFT N4		2-10 VDC	2-10 VDC	24 VAC/DC	150 seconds	<20 seconds	10	-	$1,120.00	$1,002.00
NFB24-MFT-S N4		2-10 VDC	2-10 VDC	24 VAC/DC	150 seconds	<20 seconds	10	Built-in	$1,213.00	$1,002.00
CUSTOMIZE IT	**REORDER #**									
NFX24 N4	NFG200 1A1 003P	On/Off	-	24 VAC/DC	<75 seconds	20 seconds	7.5	-	$933.00 ‡	N/A
NFX24-S N4	NFG220 1A1 003P	On/Off	-	24 VAC/DC	<75 seconds	20 seconds	7.5	Built-in	$1,025.00 ‡	N/A
NFXUP N4	NFG000 1A1 003P	On/Off	-	24-240 VAC[u]	<75 seconds	20 seconds	6.5	-	$983.00 ‡	N/A
NFXUP-S N4	NFG020 1A1 003P	On/Off	-	24-240 VAC[u]	<75 seconds	20 seconds	6.5	Built-in	$1,076.00 ‡	N/A
NFX24-SR N4	NFG400 1A1 H01P	2-10 VDC	2-10 VDC	24 VAC/DC	95 seconds	<20 seconds	8.5	-	$1,061.00 ‡	N/A
NFX24-SR-S N4	NFG420 1A1 H01P	2-10 VDC	2-10 VDC	24 VAC/DC	95 seconds	<20 seconds	8.5	Built-in	$1,154.00 ‡	N/A
NFX24-MFT N4	NFG600 1A1 A01P**	Variable with MFT (VDC, PWM, Floating Point, On/Off)	Variable VDC	24 VAC/DC	40 to 220 seconds (150 default)	<20 seconds	10	-	$1,120.00 ‡	N/A
NFX24-MFT-S N4	NFG620 1A1 A01P**	Variable with MFT (VDC, PWM, Floating Point, On/Off)	Variable VDC	24 VAC/DC	40 to 220 seconds (150 default)	<20 seconds	10	Built-in	$1,213.00 ‡	N/A

♦ Variable with MFT. ♦♦<60 seconds @ -22°F [-30°C]. **u 24 to 125 VDC.**

‡ Prices do not reflect MFT programming code surcharge and/or custom options. Price shown is for default cable, running times and control inputs (if applicable). Refer to product pages for custom options and reorder numbers.

Note: 10 ft. and 16 ft. cables available on all NFX models except for MFT95 and models with heaters; list price adder to 3 ft. cable versions are: 10 ft.: $28 for single cable and $50 for ..-S; 16 ft.: $48 for single cable and $90 for ..-S.

* Fixed input.

**The P-Code programs the actuator for the desired Control Input, Feedback & Running Time. Refer to page 1-9.

***** Heater option: add "H" to the end of "N4", for example NFB24-MFT N4H. $1,002.00 list price adder for select NEMA 4 models above.**

All NF NEMA 4 models are configured for a CCW spring return rotation. For CW spring return rotation, field reconfiguration is needed.

067001 - 04/13 - Subject to change. © Belimo Aircontrols (USA), Inc.

Jackshaft for Spring Return Series Damper Actuators

BELIMO

Actuator and Linkage Specifications

Torque	
AFX	166 in-lbs [18Nm] minimum
NFX	87 in-lbs [9Nm] minimum
LF	33 in-lbs [3Nm] minimum
Angle of rotation	95° (adjustable with mechanical stops)
JSL clamp size	½" to 1.05" (centers on ½"and ¾" shafts with insert and 1.05" without inserts)
Position indication	visual indicator on actuator
Manual override	manual crank (AFX and NFX only)
Direction of rotation	CW/CCW external switch (proportional models)
Dimensions	
ZG-JSL	14.05" x 4.65" x 4.46" [357 x 118 x 113.4 mm]
Electrical connection	3 ft., 18 GA appliance cable (default), ½" conduit fitting
Overload protection	electronic throughout rotation
Auxiliary switch(es)	**-S models:** refer to actuator product pages
Housing	NEMA 2/IP54, UL enclosure Type 2
Agency listings	cULus according to UL 60730-1A/-2-14, CAN/CSA E60730-1:02, CE according to 2004/108/EC and 2006/95/EC



ZG-JSL



ZG-JSLA + NFX24-MFT-S

‡‡ For other actuator models, please contact factory or visit us at www.belimo.us for possible combinations

CE LISTED 94 D5 TEMP. IND. & REG. EQUIP. c UL us

5 YEAR WARRANTY

Spring Return Damper Actuators

Model		Control Input	Feedback	Power Supply	Running Time(s) [Default]	VA Rating	Auxiliary Switch	List Price (Linkage Only)	ZG-JSLA List Price* (Actuator + Linkage)
BASIC PRODUCTS									
Jackshaft (only)	ZG-JSL							$250.00	
CUSTOMIZE PRODUCTS‡‡	**REORDER #**								
ZG-JSLA + AFX24	JSL+AF200 2A1 003	On/Off	-	24 VAC/DC	<75 seconds	7.5	-		$672.00
ZG-JSLA + AFX24-S	JSL+AF220 2A1 003	On/Off	-	24 VAC/DC	<75 seconds	7.5	Built-in		$764.00
ZG-JSLA + AFXUP	JSL+AF000 2A1 003	On/Off	-	24-240 VAC	<75 seconds	8.5	-		$728.00
ZG-JSLA + AFXUP-S	JSL+AF020 2A1 003	On/Off	-	24-240 VAC	<75 seconds	8.5	Built-in		$821.00
ZG-JSLA + AFX24-SR	JSL+AF400 2A1 H01	2-10 VDC	2-10 VDC	24 VAC/DC	95 seconds	8.5	-		$788.00
ZG-JSLA + AFX24-SR-S	JSL+AF420 2A1 H01	2-10 VDC	2-10 VDC	24 VAC/DC	95 seconds	8.5	Built-in		$879.00
ZG-JSLA + AFX24-MFT	JSL+AF600 2A1 A01	Variable with MFT (VDC, PWM, Floating Point, On/Off)	Variable VDC	24 VAC/DC	150 seconds	10	-		$848.00
ZG-JSLA + AFX24-MFT-S	JSL+AF620 2A1 A01	Variable with MFT (VDC, PWM, Floating Point, On/Off)	Variable VDC	24 VAC/DC	150 seconds	10	Built-in		$942.00
ZG-JSLA + AFX24-MFT95	JSL+AFE10 2C1 R01	0-135 Ω	Variable VDC	24 VAC/DC	150 seconds	10	-		$871.00
ZG-JSLA + NFX24	JSL+NF200 2A1 003	On/Off	-	24 VAC/DC	<75 seconds	8.5	-		$587.00
ZG-JSLA + NFX24-S	JSL+NF220 2A1 003	On/Off	-	24 VAC/DC	<75 seconds	8.5	Built-in		$679.00
ZG-JSLA + NFXUP	JSL+NF000 2A1 003	On/Off	-	24-240 VAC	<75 seconds	6.5	-		$637.00
ZG-JSLA + NFXUP-S	JSL+NF020 2A1 003	On/Off	-	24-240 VAC	<75 seconds	6.5	Built-in		$730.00
ZG-JSLA + NFX24-SR	JSL+NF400 2A1 H01	2-10 VDC	2-10 VDC	24 VAC/DC	95 seconds	6	-		$715.00
ZG-JSLA + NFX24-SR-S	JSL+NF420 2A1 H01	2-10 VDC	2-10 VDC	24 VAC/DC	95 seconds	6	Built-in		$808.00
ZG-JSLA + NFX24-MFT	JSL+NF600 2A1 A01	Variable with MFT (VDC, PWM, Floating Point, On/Off)	Variable VDC	24 VAC/DC	150 seconds	9	-		$774.00
ZG-JSLA + NFX24-MFT-S	JSL+NF620 2A1 A01	Variable with MFT (VDC, PWM, Floating Point, On/Off)	Variable VDC	24 VAC/DC	150 seconds	9	Built-in		$867.00
ZG-JSLA + LF24 US	JSL+LF24 US	On/Off	-	24 VAC/DC	<40 to 75 seconds	7	-		$525.00
ZG-JSLA + LF24-S US	JSL+LF24-S US	On/Off	-	24 VAC/DC	<40 to 75 seconds	7	Built-in		$584.00
ZG-JSLA + LF120 US	JSL+LF120 US	On/Off	-	24 VAC/DC	<40 to 75 seconds	7.5	-		$560.00
ZG-JSLA + LF24-SR US	JSL+LF24-SR US	2-10 VDC	2-10 VDC	24 VAC/DC	150 seconds	5	-		$646.00
ZG-JSLA + LF24-3 US	JSL+LF24-3 US	Floating Point	-	24 VAC/DC	150 seconds	5	-		$596.00
ZG-JSLA + LF24-MFT US	JSL+LS100 0A1 A01	Variable with MFT (VDC, PWM, Floating Point, On/Off)	Variable VDC	24 VAC/DC	150 seconds	5	-		$704.00

*At the factory, there is a $50.00 savings on the Jackshaft (ZG-JSL) if assembled with the actuator.
Example: ZG-JSL ($250.00) + NFX24-MFT-S ($667.00) = Total List Price ($917.00) - Factory Installed Savings ($50.00).
Total List Price of Assembled at Factory ZG-JSLA + NFX24-MFT-S is $867.00.

067001 - 04/13 - Subject to change. © Belimo Aircontrols (USA), Inc.

2 ELECTRONIC FAIL-SAFE DAMPER ACTUATORS

- Fail-safe position can be set 0-100% in 10% increments by using the PC-Tool or manually from the actuator.
- High torque (360 in-lbs) offering that can handle many applications.
- LED status provides visual feedback on the actuator charge.
- Low power consumption provides higher efficiency and smaller transformer sizing.
- Minimum torque guaranteed over entire specified operating range, no loss in performance due to temperature or supply voltage.
- MFT is available in all Electronic Fail-Safe actuators, giving the user the flexibility to customize and adapt a single actuator to various controllers and applications.

Applications

Belimo actuators are designed for use in a wide variety of HVAC damper applications. With our comprehensive torque range and the ability to direct mount on standard damper shafts or jackshafts, solutions are available for control dampers, air handlers, economizer units, VAV terminal units, fan coil units, fan shutters, and unit ventilators.



Electronic Fail-Safe Damper Actuator Nomenclature

GK		B	24	-3
Torque Rating	**Speed**	**Version**	**Power Supply**	**Control**
GK = 360 in-lbs	Q = Quickest Running	B = Basic	24 = 24 VAC/DC*	-1 = On/Off
AHK = 101 lbf	Blank = Normal Speed	X = Customized		-3 = On/Off, Floating Point
NK = 54 in-lbs				-SR = 2-10 VDC
				-MFT = Multi-Function Technology

* GK...24-3 is 24 VAC only.

Ordering Example

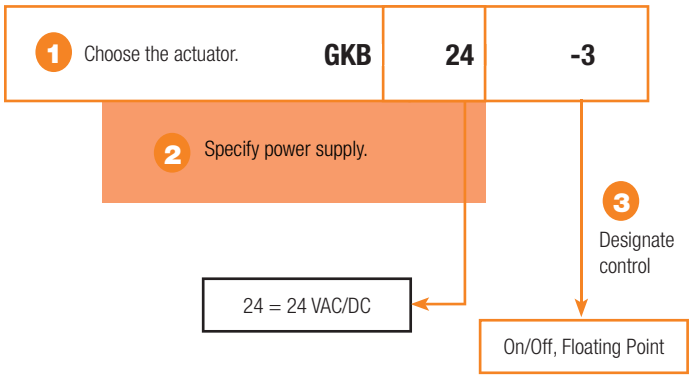

4 Complete Ordering Example: GKB24-3**

** All functions and packaging are not available with all versions.

Standard Electronic Fail-Safe Damper Actuator Product Range

		Running Time(s)		Power Supply	Power Consumption		Control Input			Position Feedback	Add-On		NEMA 4
		Motor Drive	Fail-Safe	24 VAC +/- 20%, 50/60 HZ, VDC +/-10/+20%	VA Rating, Transformer Sizing	Wattage Running (Holding)	On/Off	Floating Point	2-10 VDC (Default) 4-20 mA* (w/500 Ω Resistor)	2-10 VDC (Default)	S1A or S2A	Potentiometer	NEMA 4 Option (part # + N4) Example: GKB24-3 N4
GKB Series 360 in-lbs [40 Nm] Approx. 90 sq. ft.	GKB24-3	150	35	●	21	12 (3)	●	●			●	●	●
	GKB24-SR	150	35	●	21	12 (3)			●	●	●	●	●
NKQB Series 54 in-lbs [6 Nm] Approx. 12 sq. ft.	NKQB24-1	4	4	●	22	11 (3)	●				●	●	
	NKQB24-SR	4	4	●	22	11 (3)			●	●	●	●	

Custom Electronic Fail-Safe Damper Actuator Product Range

		Custom Options	Running Time(s)		Power Supply	Power Consumption		Control Input			Control Input MFT				Position Feedback		Add-On		NEMA 4
		10 ft. (3m) or 16 ft. (5m) cable	Motor Drive (Default)	Fail-Safe	24 VAC +/- 20%, 50/60 HZ, VDC +/- 10%	VA Rating, Transformer Sizing	Wattage Running (Holding)	On/Off	Floating Point	2-10 VDC (Default) 4-20 mA* (w/500 Ω Resistor)	On/Off	Floating Point	Start and Span adj., Start 0.5 to 30 VDC, Span 2.5 to 32 VDC	PWM adj., 0.02 to 50.0 Seconds	2-10 VDC (Default)	VDC Variable, Start 0 to 8, Span 2 to 10 VDC	S1A or S2A	Potentiometer	NEMA 4 Option (part # + N4) Example: GKX24-MFT-T N4
GKX Series 360 in-lbs [40 Nm] Approx. 90 sq. ft.	GKX24-3	●	90, 150 (150)	35	●	21	12 (3)	●	●								●	●	
	GKX24-SR	●	90, 150 (150)	35	●	21	12 (3)			●					●		●	●	
	GKX24-MFT*	●	90, 150 (150)	35	●	21	12 (3)				●	●	●	●	●	●	●	●	●
NKQX Series 54 in-lbs [6 Nm] Approx. 12 sq. ft.	NKQX24-1	●	4-10 (4)	4	●	22	11 (3)	●									●	●	
	NKQX24-SR	●	4-10 (4)	4	●	22	11 (3)			●					●		●	●	
	NKQX24-MFT	●	4-10 (4)	4	●	22	11 (3)				●		●		●	●	●	●	
AHKX Series 101 lbf [450 N force]	AHKX24-MFT	●	90, 150 (150)	35	●	22	11 (3)				●	●	●	●	●	●			

*Piggy back mounting on a single shaft for -MFT wired master-slave.

067001 - 04/13 - Subject to change. © Belimo Aircontrols (USA), Inc.

GK Series

Direct Coupled, Electronic Fail-Safe Damper Actuators, 360 in-lbs Minimum Torque

Actuator Specifications

Torque	360 in-lbs [40 Nm] minimum
Angle of rotation♦	95°, adjustable with mechanical end stops MFT electronically variable 0-100%
Fits shaft diameter	1/2" to 1.05" (center on 3/4" shaft with insert and on 1" without insert)
Position indication	reflective visual indicator (snap on)
Manual override	external push button
Direction of rotation♦	external switch
Dimensions	8.3" x 4.5" x 3.4"
Fail-safe setting -3, -SR MFT	 0°-95° at 10° intervals 0-100% at 10% intervals
Electrical connection	3 ft., 18 GA plenum rated cable, 1/2" conduit fitting
Overload protection	electronic throughout rotation
Auxiliary switch(es)	add on: 1 or 2 SPDT, 3A (0.5A inductive) @ 250V adjustable 5° to 85°
Housing	NEMA 2/IP54, UL enclosure Type 2
Agency listings	cULus according to UL 60730-1A/-2-14, CAN/CSA E60730-1:02, CE according to 2004/108/EC and 2006/95/EC



GKX24-SR

All actuators have BDCM

LISTED 94 D5 TEMP. IND. & REG. EQUIP.

5 YEAR WARRANTY

Electronic Fail-Safe Damper Actuators

Model	Control Input	Feedback	Power Supply	Running Time(s)		VA Rating	Auxiliary Switch	List Price
				Motor	Fail-Safe			
BASIC PRODUCTS								
GKB24-3	On/Off Floating Point	Add-on	24 VAC	150 seconds	35 seconds	21	Add-on	$1,074.00
GKB24-SR	2-10 VDC (4-20 mA*)	2-10 VDC	24 VAC/DC	150 seconds	35 seconds	21	Add-on	$1,339.00

♦ Variable with MFT.
*500 Ω resistor added.

067001 - 04/13 - Subject to change. © Belimo Aircontrols (USA), Inc.



GKB...
B = Basic stocked product

- Standard 150 second run time.
- Standard 3/4" to 1.05" clamp.
- Standard 3' plenum cable with conduit connector.

Typical Lead Time: 1 day

GKX...
X = Customizable product

- Choice of 10' or 16' cable with conduit connector.
- Factory programming for run time, control signal and feedback.

Typical Lead Time: 3 days or less

Reorder number consists of options which differ from standard product. This number is printed on the actuator for easy re-ordering.
For example:

Reorder # for a GKX24-MFT is: GK4J01C3A01

4 No Charge
3 $28.00
2 No Charge
1 $1,478.00
$1,506.00 Final Price

1 ACTUATOR TYPE

TYPE	Power	Control Input	Feedback	Code 1	List Price
GKX24-3	24V	On/Off, Floating Point	-	GK4K0	$1,074.00
GKX24-SR	24V	2-10 VDC	Yes	GK6K0	$1,339.00
GKX24-MFT*	24V	(see MFT label)	Yes	GK4J0	$1,478.00

2 CLAMP

TYPE	Size	Code 2	List Price
Standard Universal Clamp	3/4" to 1.05"	1	No Charge

3 CABLES

CABLE (with conduit fitting)	Size	Code 3	List Price
24V Plenum Rated	3 ft.	C1	No Charge
	10 ft.	C3	$28.00
	16 ft.	C5	$48.00

4 PROGRAM

	Running Time	Control Input	Feedback	Code 4	List Price
-3	150 seconds	On/Off, Floating Point	-	F1D	No Charge
	90 seconds	On/Off, Floating Point	-	F1E	No Charge
-SR	150 seconds	2-10 VDC	2-10 VDC	AE2	No Charge
	90 seconds	2-10 VDC	2-10 VDC	AE0	No Charge
-MFT	150 seconds	2-10 VDC	2-10 VDC	A01	No Charge
	150 seconds	0.5-10 VDC	0.5-10 VDC	A02	No Charge
	90 seconds	2-10 VDC	2-10 VDC	AC1	No Charge
	90 seconds	0.5-10 VDC	0.5-10 VDC	ACA	No Charge
	150 seconds	Floating Point	2-10 VDC	F01	No Charge
	150 seconds	On/Off	2-10 VDC	J02	No Charge
	150 seconds	PWM (0.02-5 sec)	2-10 VDC	W02	No Charge

Multi-Function Technology offers a wide variety of programmable control inputs and feedback signals. Parameters can be set for voltage control (VDC), time proportional control (PWM), floating point, on/off and feedback signal. Parameters can be changed on-site to optimize/enable application. You can also set, modify or read position, running time, mechanical working range, address, status, and diagnostics.

For additional MFT programming codes, refer to MFT technical documentation or visit www.belimo.us.

* For applications that require more torque, a maximum of two GKX24-MFT actuators can be tandem mounted and wired master-slave for loads of up to 720 in-lbs.

067001 - 04/13 - Subject to change. © Belimo Aircontrols (USA), Inc.

NKQ Series

Direct Coupled, Electronic Fail-Safe Damper Actuators, 54 in-lbs Minimum Torque

Actuator Specifications

Torque	54 in-lbs [6 Nm] minimum
Angle of rotation♦	95°, adjustable with mechanical end stops MFT electronically variable 0-100%
Fits shaft diameter	1/2" to 1.05" (center on 1/2" and 3/4" shaft with insert and on 1" without insert)
Position indication	reflective visual indicator (snap on)
Manual override	external push button
Direction of rotation♦	external switch
Dimensions	7.25" x 3.9" x 3"
Fail-safe setting -1, -SR MFT	 0°-95° at 10° intervals 0-100% at 10% intervals
Electrical connection	3 ft., 18 GA plenum rated cable, 1/2" conduit fitting
Overload protection	electronic throughout rotation
Auxiliary switch(es)	add on: 1 or 2 SPDT, 3A (0.5A inductive) @ 250V adjustable 5° to 85°
Housing	NEMA 2/IP54, UL enclosure Type 2
Agency listings	cULus according to UL 60730-1A/-2-14, CAN/CSA E60730-1:02, CE according to 2004/108/EC and 2006/95/EC



NKQB24-SR

All actuators have BDCM

LISTED 94 D5 TEMP. IND. & REG. EQUIP.

5 YEAR WARRANTY

Electronic Fail-Safe Damper Actuators

Models	Control Input	Feedback	Power Supply	Running Time(s) Motor	Running Time(s) Fail-Safe	VA Rating	Auxiliary Switch	List Price
BASIC PRODUCTS								
NKQB24-1	On/Off	Add-on	24 VAC/DC	4 seconds	4 seconds	22	Add-on	$735.00
NKQB24-SR	2-10 VDC (4-20 mA*)	2-10 VDC	24 VAC/DC	4 seconds	4 seconds	22	Add-on	$779.00

♦ Variable with MFT.
*500 Ω resistor added.

067001 - 04/13 - Subject to change. © Belimo Aircontrols (USA), Inc.



1 ACTUATOR TYPE

TYPE	Power	Control Input	Feedback	Code 1	List Price
NKQX24-1	24V	On/Off	-	NKQ4K0	$735.00
NKQX24-SR	24V	2-10 VDC	Yes	NKQ6K0	$779.00
NKQX24-MFT	24V	(see MFT label)	Yes	NKQ4J0	$843.00

2 CLAMP

TYPE	Size	Code 2	List Price
Standard Universal Clamp	3/4" to 1.05"	1	No Charge
	Reversible	7	$16.00

3 CABLES

CABLE (with conduit fitting)	Size	Code 3	List Price
24V Plenum Rated	3 ft.	C1	No Charge
	10 ft.	C3	$28.00
	16 ft.	C5	$48.00

4 PROGRAM

	Running Time	Control Input	Feedback	Code 4	List Price
-1	4 seconds	On/Off	-	T0H	No Charge
-SR	4 seconds	2-10 VDC	2-10 VDC	T0L	No Charge
-MFT	4 seconds	2-10 VDC	2-10 VDC	T02	No Charge
	7 seconds	2-10 VDC	2-10 VDC	T03	No Charge
	10 seconds	2-10 VDC	2-10 VDC	T04	No Charge
	4 seconds	0.5-10 VDC	0.5-10 VDC	T08	No Charge
	7 seconds	0.5-10 VDC	0.5-10 VDC	T09	No Charge
	10 seconds	0.5-10 VDC	0.5-10 VDC	T0A	No Charge

Multi-Function Technology offers a wide variety of programmable control inputs and feedback signals. Parameters can be set for voltage control (VDC), on/off and feedback signal. Parameters can be changed on-site to optimize/enable application. You can also set, modify or read position, running time, mechanical working range, address, status, and diagnostics.

For additional MFT programming codes, refer to MFT technical documentation or visit www.belimo.us.

NKQB...
B = Basic stocked product

- Standard 4 second run time.
- Standard 1/2" to 1.05" clamp.
- Standard 3' plenum cable with conduit connector.

Typical Lead Time: 1 day

NKQX...
X = Customizable product

- Choice of 10' or 16' cable with conduit connector.
- Form fit available in 12x12 mm, 10x10 mm or 8x8 mm.
- Factory programming for run time, control signal and feedback.

Typical Lead Time: 3 days or less

Reorder number consists of options which differ from standard product. This number is printed on the actuator for easy re-ordering.
For example:

Reorder # for a NKQX24-SR is: NKQ6K01C5T0L

4 No Charge
3 $48.00
2 No Charge
1 $779.00
$827.00 Final Price

067001 - 04/13 - Subject to change. © Belimo Aircontrols (USA), Inc.

AHK Series

Direct Coupled, Electronic Fail-Safe Damper Actuators, 101 lbf Linear Force

Actuator Specifications

Linear force	101 lbf [450 N force] minimum
Manual override	external push button
Direction of stroke ♦	reversible with switch
Dimensions	7.5"x 4.5" x 3.75"
Fail-safe setting	0-100% at 10% intervals
Electrical connection	3 ft., 18 GA plenum rated cable, 1/2" conduit fitting
Overload protection	electronic throughout full stroke
Housing	NEMA 2/IP54, UL enclosure Type 2
Agency listings	cULus according to UL 60730-1A/-2-14, CAN/CSA E60730-1:02, CE according to 2004/108/EC and 2006/95/EC



AHKX24-MFT

MFT

MFT= 2-10 VDC Default, or Set, Modify, Read:

- **Control – (PWM, VDC range, Floating Point)**
- **Feedback (0.5 VDC, 2-10 VDC, Variable)**
- **Motion (run time)**

All actuators have BDCM

LISTED 94 D5 TEMP. IND. & REG. EQUIP. c UL us

5 YEAR WARRANTY

Model	Electronic Fail-Safe Damper Actuators						
	Control Input	Feedback	Power Supply	Running Time(s)		VA Rating	List Price
				Motor	Fail-Safe		
CUSTOMIZED PRODUCTS							
AHKX24-MFT-100	2-10 VDC (4-20 mA*)	2-10 VDC	24 VAC/DC	150 seconds	35 seconds	22	$1,388.00**

Stock is 4" [100mm].

♦ Variable with MFT.

*500 Ω resistor added.

** Price includes 3 ft. cable and no charge programming codes.

NOTE: 10' and 16' cables are available with a $28.00 and $48.00 adder.

067001 - 04/13 - Subject to change. © Belimo Aircontrols (USA), Inc.



AHKX24-MFT-100

X = Customizable product

- Choice of 10' or 16' cable with conduit connector.
- Factory programming for Run time, Control signal and Feedback.

Typical Lead Time: 3 days or less

Reorder number consists of options which differ from standard product. This number is printed on the actuator for easy re-ordering.
For example:

Reorder # for a AHKX24-MFT-100 is: AHK4J0 0 C3 A01

4 No Charge
3 $28.00
2 No Charge
1 $1,388.00
$1,416.00 Final Price

1 ACTUATOR TYPE

TYPE	Power	Control Input	Feedback	Code 1	List Price
AHKX24-MFT-100	24V	(see MFT label)	Yes	AHK4J0	$1,388.00

2 CLAMP

TYPE	Size	Code 2	List Price
None	-	0	No Charge

3 CABLES

CABLE (with conduit fitting)	Size	Code 3	List Price
24V Plenum Rated	3 ft.	C1	No Charge
	10 ft.	C3	$28.00
	16 ft.	C5	$48.00

4 PROGRAM

	Running Time	Control Input	Feedback	Code 4	List Price
-MFT	150 seconds	2-10 VDC	2-10 VDC	A01	No Charge
	150 seconds	0.5-10 VDC	0.5-10 VDC	A02	No Charge
	100 seconds	2-10 VDC	2-10 VDC	A19	No Charge
	150 seconds	Floating Point	2-10 VDC	F01	No Charge
	150 seconds	On/Off	0-10 VDC	J02	No Charge
	120 seconds	On/Off	2-10 VDC	J06	$34.00
	150 seconds	PWM (0.02-5 sec)	2-10 VDC	W02	No Charge

Multi-Function Technology offers a wide variety of programmable control inputs and feedback signals. Parameters can be set for voltage control (VDC), time proportional control (PWM), floating point, on/off and feedback signal. Parameters can be changed on-site to optimize/enable application. You can also set, modify or read position, running time, mechanical working range, address, status, and diagnostics.

For additional MFT programming codes, refer to MFT technical documentation or visit www.belimo.us.

067001 - 04/13 - Subject to change. © Belimo Aircontrols (USA), Inc.

GK Series with NEMA 4 Housing

Direct Coupled, Electronic Fail-Safe Damper Actuators, 360 in-lbs Minimum Torque

Actuator Specifications

Torque	360 in-lbs [40 Nm] minimum -22°F to 122°F [-30°C to 50°C] **N4H Models:** -40°F to 122°F [-40°C to 50°C]
Angle of rotation♦	95°, adjustable with mechanical end stops MFT electronically variable 0-100%
Fits shaft diameter	1/2" to 1.05" (clamp centers on 3/4" and 1.05")
Dimensions	12.5" x 6.25" x 7.25" [318 x 159 x 184 mm]
Electrical connection	terminal strip (-T)
Overload protection	electronic throughout rotation
Auxiliary switch(es)	add-on: 1 or 2 SPDT, 3A (0.5A inductive) @ 250V adjustable 5° to 85°
Housing specification	NEMA 4, IP66, UL enclosure Type 4
Agency listings	cULus according to UL 60730-1A/-2-14, CAN/CSA E60730-1:02, CE according to 2004/108/EC and 2006/95/EC
Control shaft length	minimum 1" maximum 2-1/4"



NEMA 4 Housing

MFT

MFT= 2-10 VDC Default, or Set, Modify, Read:

- **Control (PWM, VDC range, Floating Point)**
- **Feedback (0-10 VDC, 0-5 VDC, 2-10 VDC, Variable)**
- **Motion (run time)**

All actuators have BDCM

LISTED 94 D5 TEMP. IND. & REG. EQUIP.

5 YEAR WARRANTY

Electronic Fail-Safe Damper Actuators

Model	Control Input	Feedback	Power Supply	Running Time(s)	VA Rating	Auxiliary Switch	List Price
CUSTOMIZED PRODUCTS **REORDER #**							
GKX24-3-T N4 GKG4T0 1T1 F1DP	On/Off, Floating Point	Add-on	24 VAC	150 seconds	21	Add-on	$1,610.00
GKX24-SR-T N4 GKG4F0 1T1 AE2P	2-10 VDC (4-20 mA*)	2-10 VDC	24 VAC/DC	150 seconds	21	Add-on	$1,875.00
GKX24-MFT-T N4 GKG4N0 1T1 A01P	Various with MFT (VDC, PWM, Floating Point, On/Off)	Variable VDC	24 VAC/DC	90, 150 seconds (150 default)	21	Add-on	$2,014.00
HEATER VERSIONS							
GKB24-3-T N4H	On/Off, Floating Point	Add-on	24 VAC	150 seconds	42	Add-on	$1,968.00
GKB24-SR-T N4H	2-10 VDC (4-20 mA*)	2-10 VDC	24 VAC/DC	150 seconds	42	Add-on	$2,233.00
GKB24-MFT-T N4H	2-10 VDC (4-20 mA*)	2-10 VDC	24 VAC/DC	150 seconds	42	Add-on	$2,372.00

♦ Variable with MFT.
* 500 Ω resistor added.

067001 - 04/13 - Subject to change. © Belimo Aircontrols (USA), Inc.

3 FIRE AND SMOKE DAMPER ACTUATORS

- ISO 9001 Certified Quality Control and a 5-year warranty assures reliable operation with exceptional customer support.
- 30 in-lbs, 70 in-lbs, 133 in-lbs & 180 in-lbs torque assortment.
- 24, 120, & 230 VAC availability to meet various wiring requirements.
- 24 VDC (FSAF only) with 2-position and proportional control to suit special installations.
- FSAF24-BAL actuator allows duct balancing capabilities from fire and smoke dampers.
- Belimo FS Actuators are UL555 and UL555S listed with U.S. damper manufacturers.

Applications

The growing sophistication of fire and smoke dampers has introduced an evolutionary shift in damper actuation needs. Belimo's FSLF, FSNF and FSAF product lines offer a broad assortment of actuators to cover the established range of system applications. To address the expanding use of active smoke control systems, Belimo introduced the proportional FSAF24-SR for stairwell, under-floor and other pressurization applications. Belimo continues to lead market innovation with its newest FSAF24-BAL for consolidating duct balancing applications with fire and smoke actuated dampers.



Fire and Smoke Actuator Nomenclature

FS	L	F	120		-S	US
Fire and Smoke	**Torque Rating** A = 133/180 in-lbs N = 70 in-lbs L = 30 in-lbs	**Actuator Type** F = Spring Return	**Power Supply** 24 = 24 VAC 120 = 120 VAC 230 = 230 VAC	**Control** Blank = On/Off -SR = 2-10 VDC -BAL = 3-position	-S = Built-in Auxiliary Switches	

Ordering Example

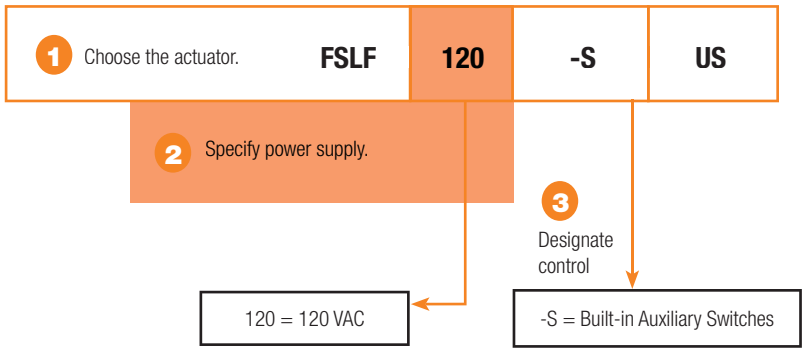

4 Complete Ordering Example: FSLF120-S US

Fire and Smoke Actuator Product Range

		Running Time(s)		Power Supply			Power Consumption	Control Input	Auxiliary Switches	
		Motor Drive	Spring Return	24 VAC (FSAF - 24 VAC/DC)	120 VAC	230 VAC	VA Rating	On/Off	2 SPST	2 SPDT
 **FSAF Series** 133 in-lbs [15 Nm] Approx. 16 sq. ft.@ 250°F	FSAF24 US	<75	<20	●			10	●		
	FSAF24-S US	<75	<20	●			10	●	●	
	FSAF120 US	<75	<20		●		11	●		
	FSAF120-S US	<75	<20		●		11	●	●	
	FSAF230 US	<75	<20			●	12	●		
	FSAF230-S US	<75	<20			●	12	●	●	
	FSAF24-SR US	<75	<20	●			11	2-10 VDC		
	FSAF24-SR-S	<75	<20	●			11	2-10 VDC		●
	FSAF24-BAL	<75	<20	●			10	3-Position		
	FSAF24-BAL-S	<75	<20	●			10	3-Position		●
 **FSAFB Series** 180 in-lbs [20 Nm] Approx. 45 sq. ft.@ 250°F	FSAFB24-SR	<75	<20	●			9	2-10 VDC		
	FSAFB24-SR-S	<75	<20	●			9	2-10 VDC		●
	FSAFB24-SR-SC	<75	<20	●			9	2-10 VDC		
	FSAFB24-SR-S-SC	<75	<20	●			9	2-10 VDC		●
 **FSNF Series** 70 in-lbs [8 Nm] Approx. 12 sq. ft.@ 350°F	FSNF24 US	<15	<15	●			24*	●		
	FSNF24-S US	<15	<15	●			24*	●		●
	FSNF120 US	<15	<15		●		23*	●		
	FSNF120-S US	<15	<15		●		23*	●		●
	FSNF230 US	<15	<15			●	23*	●		
	FSNF230-S US	<15	<15			●	23*	●		●
 **FSLF Series** 30 in-lbs [3.5 Nm] Approx. 4 sq. ft.@ 350°F	FSLF24 US	<15	<15	●			15**	●		
	FSLF24-S US	<15	<15	●			15**	●	●	
	FSLF120 US	<15	<15		●		18**	●		
	FSLF120-S US	<15	<15		●		18**	●	●	
	FSLF230 US	<15	<15			●	17**	●		
	FSLF230-S US	<15	<15			●	17**	●	●	

* See VA rating note on page 3-3.
**See VA rating note on page 3-4.

067001 - 04/13 - Subject to change. © Belimo Aircontrols (USA), Inc.

FSAF and FSAFB Series

Direct Coupled, Fire and Smoke, Spring Return Damper Actuators, 133 in-lbs and 180 in-lbs Minimum Torque

Actuator Specifications

Torque	
FSAF series	133 in-lbs [15 Nm] minimum from -22°F to +122°F ♦
FSAFB series	180 in-lbs [20 Nm] minimum from -22°F to +122°F ♦
Angle of rotation	95°
Fits shaft diameter	½"-1.05" (K4-2 clamp self-centers on ½", ¾" and 1.05")
Position indication	visual indicator, 0 to 95°
Manual override	
FSAF series	3 mm hex crank
FSAFB series	5 mm hex crank
Direction of rotation	
FSAF series	CW/CCW mounting
FSAFB series	reversible with built-in switch
Dimensions	
FSAF series	10.59" x 3.86" x 3.23" [266 x 98 x 78 mm]
FSAFB series	9.69" x 3.86" x 3.42" [246.1 x 98 x 86.9 mm]
Electrical connection	3 ft, 18 GA, ½" conduit fitting
- SC version	8 in, 18 GA, ½" conduit fitting
Overload protection	electronic throughout rotation
Auxiliary switch(es)	2 SPST or 2 SPDT, 7A (2.5A inductive) @ 125/250V
Housing	
FSAF series	NEMA 1
FSAFB series	NEMA 2/IP54, enclosure Type 2
Agency listings	cULus listed according to UL873 and CAN/CSA C22.2 No. 24-93

♦ For UL555S, torque is the same for ½ hour at 250°F.



FSAF24-US



FSAFB24-SR

LISTED 94 D5 TEMP. IND. & REG. EQUIP. c UL us

5 YEAR WARRANTY

Spring Return Damper Actuators

Model	Control Input	Feedback	Power Supply	Running Time(s)		VA Rating	Auxiliary Switches SPST or SPDT	List Price
				(M)				
BASIC PRODUCTS								
FSAF24 US	On/Off	None	24 VAC/DC	<75	<20	10	—	$571.00
FSAF24-S US	On/Off	None	24 VAC/DC	<75	<20	10	2 x SPST	$664.00
FSAF120 US	On/Off	None	120 VAC	<75	<20	11	—	$629.00
FSAF120-S US	On/Off	None	120 VAC	<75	<20	11	2 x SPST	$723.00
FSAF230 US	On/Off	None	230 VAC	<75	<20	12	—	$743.00
FSAF230-S US	On/Off	None	230 VAC	<75	<20	12	2 x SPST	$837.00
FSAF24-SR US	2-10 VDC**	2-10 VDC	24 VAC/DC	<75	<20	11	—	$736.00
FSAF24-SR-S US	2-10 VDC**	2-10 VDC	24 VAC/DC	<75	<20	11	2 x SPDT*	$830.00
FSAF24-BAL US	3-Position, Built-in Potentiometer	None	24 VAC/DC	<75	<20	10	—	$656.00
FSAF24-BAL-S US	3-Position, Built-in Potentiometer	None	24 VAC/DC	<75	<20	10	2 x SPDT*	$750.00
FSAFB24-SR	2-10 VDC**	2-10 VDC	24 VAC/DC	<75	<20	9	—	$715.00
FSAFB24-SR-S	2-10 VDC**	2-10 VDC	24 VAC/DC	<75	<20	9	2 x SPDT*	$806.00
FSAFB24-SR-SC***	2-10 VDC**	2-10 VDC	24 VAC/DC	<75	<20	9	—	$715.00
FSAFB24-SR-S-SC***	2-10 VDC**	2-10 VDC	24 VAC/DC	<75	<20	9	2 x SPDT*	$806.00

* One switch fixed at 10° and one adjustable from 30° to 90°.
** 4-20 mA with 500 Ω load resistor.
*** -SC signifies short cable, 8 inches long; for ease of connection / fit in close proximity j-box.

Specific models and sizes vary with each damper manufacturer.
Visit www.belimo.us/firesmoke for latest listings.

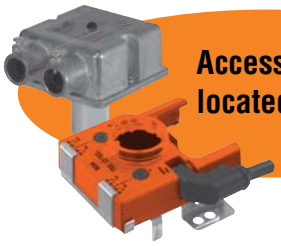

Accessories located on page 5-11

067001 - 04/13 - Subject to change. © Belimo Aircontrols (USA), Inc.

Actuator Specifications

Torque	70 in-lbs [7.8 Nm] minimum from 32°F to 122°F ♦
Angle of rotation	95°
Fits shaft diameter	1/2"-1.05" (K4-2 clamp self-centers on 1/2", 3/4" and 1.05")
Position indication	visual indicator, 0 to 95°
Manual override	none
Direction of rotation	CW/CCW mounting
Dimensions	10.59" x 3.86" x 3.23" [266 x 98 x 78 mm]
Electrical connection	3 ft., 18 GA, 1/2" conduit fitting
Overload protection	electronic throughout rotation
Auxiliary switch(es)	2 SPDT, 7A (2.5A inductive) @ 125/250V
Housing	NEMA 1
Agency listings	cULus listed according to UL873 and CAN/CSA C22.2 No. 24-93

♦ For UL555S, torque is the same for ½ hour at 350°F.



FSNF120-S US

LISTED 94 D5 TEMP. IND. & REG. EQUIP. c UL us

5 YEAR WARRANTY

Model	Control Input	Feedback	Power Supply	Running Time(s)		VA Rating**	Auxiliary Switches	List Price
				Ⓜ				
BASIC PRODUCTS								
FSNF24 US	On/Off	None	24 VAC only	<15	<15	24	—	$466.00
FSNF24-S US	On/Off	None	24 VAC only	<15	<15	24	2 x SPDT*	$559.00
FSNF120 US	On/Off	None	120 VAC	<15	<15	23	—	$511.00
FSNF120-S US	On/Off	None	120 VAC	<15	<15	23	2 x SPDT*	$606.00
FSNF230 US	On/Off	None	230 VAC	<15	<15	23	—	$614.00
FSNF230-S US	On/Off	None	230 VAC	<15	<15	23	2 x SPDT*	$708.00

* Switches fixed at 10° and 85°.

Note: FSNFxx-FC models are identical to standard models except instead of a 1/2" threaded conduit connector they have a 3/8" screwed flex connector.

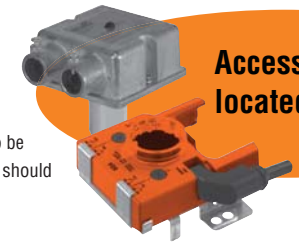

Accessories located on page 5-11

****VA Rating Note:**

Individual Fusing or Breakers are not required by Belimo.

The FSNF draws higher peak current when driving against any type of stop. This requires the value of fuse or breaker to be increased to avoid nuisance opening or tripping. A 2.5 amp slow blow should be used for 24VAC. A 0.5 amp slow blow should be used for 120VAC. A 0.25 amp slow blow should be used for 230VAC.

Transformers

A 100VA, 120V to 24V transformer will handle 2 actuators. A 5A breaker would be required.

Specific models and sizes vary with each damper manufacturer.

Visit www.belimo.us/firesmoke for latest listings.

067001 - 04/13 - Subject to change. © Belimo Aircontrols (USA), Inc.

FSLF Series

Direct Coupled, Fire and Smoke, Spring Return Damper Actuators, 30 in-lbs Minimum Torque

Actuator Specifications

Torque	30 in-lbs [3.5 Nm] minimum from 32°F to 122°F ♦
Angle of rotation	95°
Fits shaft diameter	3/8" to ½" (K6 clamp standard); ½" to ¾" (with K6-1 clamp optional)
Position indication	visual indicator, 0 to 95°
Manual override	none
Direction of rotation	CW/CCW mounting
Dimensions	7.03" x 3.86" x 3.23" [179 x 98 x 82 mm]
Electrical connection	3 ft., 18 GA, 1/2" conduit fitting
Overload protection	electronic throughout rotation
Auxiliary switch(es)	2 SPST, 3A (0.5A inductive) @ 125/250 V, 1 mA @ 5 VDC
Housing	NEMA 1
Agency listings	cULus listed according to UL60730-1 A/-2-14, CAN/CSA E60730-1 and CSA 22.2 No. 24-93

♦ For UL555S, torque is the same for ½ hour at 350°F.



FSLF120 US

LISTED 94 D5 TEMP. IND. & REG. EQUIP. c UL us

5 YEAR WARRANTY

Model	Control Input	Feedback	Power Supply	Running Time(s)		VA Rating**	Auxiliary Switches	List Price
				(M)				
BASIC PRODUCTS								
FSLF24 US	On/Off	None	24 VAC only	<15	<15	15	—	$369.00
FSLF24-S US	On/Off	None	24 VAC only	<15	<15	15	2 X SPST*	$439.00
FSLF120 US	On/Off	None	120 VAC	<15	<15	18	—	$406.00
FSLF120-S US	On/Off	None	120 VAC	<15	<15	18	2 x SPST*	$476.00
FSLF230 US	On/Off	None	230 VAC	<15	<15	17	—	$481.00
FSLF230-S US	On/Off	None	230 VAC	<15	<15	17	2 X SPST*	$551.00

* Switches fixed at 10° and 85°.

Note: FSLFxx-FC models are identical to standard models except instead of a 1/2" threaded conduit connector they have a 3/8" screwed flex connector.



Accessories located on page 5-11

****VA Rating Note:**

Individual Fusing or Breakers are not required by Belimo.

The FSLF24 draws higher peak current when driving against any type of stop. This requires the value of fuse or breaker to be increased to avoid nuisance opening or tripping. A 1 amp slow blow should be used for 24VAC. A 0.25 amp slow blow should be used for 120VAC.

Transformers

A 50VA, 120V to 24V transformer will handle 2 actuators. A 2A breaker would be required.

Specific models and sizes vary with each damper manufacturer.

Visit www.belimo.us/firesmoke for latest listings.

067001 - 04/13 - Subject to change. © Belimo Aircontrols (USA), Inc.

4 NON-SPRING RETURN DAMPER ACTUATORS

- Comprehensive torque offering (18 in-lbs to 360 in-lbs), with direct coupled, linear or rotary actuators that can handle many applications.
- All non-spring actuators use brushless DC motor technology, which is controlled by an Application Specific Integrated Circuit (ASIC).
- Minimum torque guaranteed over entire specified operating range; no loss in performance due to temperature, supply voltage or speed.
- Electronically protected against over-load.
- Low power consumption provides higher efficiency and smaller transformer sizing.

Applications

Belimo actuators are designed for use in a wide variety of HVAC damper applications. With our comprehensive torque range and the ability to direct mount on standard damper shafts or jackshafts, solutions are available for control dampers, air handlers, economizer units, VAV terminal units, fan coil units, fan shutters, and unit ventilators.



Non-Spring Return Damper Actuator Nomenclature

LM	C	B	24	-3	-T	.1
Torque Rating GM = 360 in-lbs AM = 180 in-lbs NM = 90 in-lbs LM = 45 in-lbs CM = 18 in-lbs AH = 101 lbf LH = 34 lbf LU = 27 in-lbs	**Speed** Q = Quickest Running C = Fast Running No Designation = Normal Speed (LMB24-3)	**Version** B = Basic X = Customized	**Power Required** 24 = 24 VAC/DC, 50/60 Hz 120 = 100 to 240 VAC, 50/60 Hz	**Control** -1 = On/Off -3 = On/Off, Floating Point -3-P5 = On/Off, Floating Point w/5 kΩ Feedback -3-P10 = On/Off, Floating Point w/10 kΩ Feedback -SR = 2-10 VDC -PC = 0 to 20 Volt (Phasecut) -MFT = Multi-Function Technology -MFT95 = 0 to 135 Ω	**Options** -T = Terminal Block Blank = Cable Version -S = Switch	Bulk Pack

Note: All functions and packaging are not available with all versions.
Note: Q versions have a slightly lower torque rating.

Ordering Example

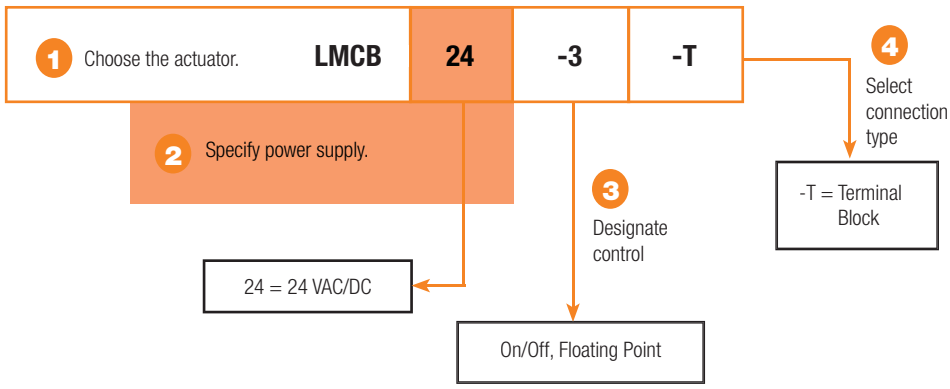

5 Complete Ordering Example: LMCB24-3-T

Standard Non-Spring Return Damper Actuator Product Range

		Running Time(s)	Power Supply		Power Consumption		Control Input			Control Input MFT					Position Feedback			Add-On			NEMA 4X
		Motor Drive	24 VAC ± 20%, 50/60 HZ, VDC ±10%	100 VAC to 240 VAC	VA Rating	Wattage Running (Holding)	On/Off	Floating Point	2-10 VDC or 4-20 mA (w/500 Ω Resistor)	On/Off	Floating Point	Start and Span adj., Start 0.5 to 30 VDC, Span 2.5 to 32 VDC	PWM adj., 0.02 to 50.0 Seconds	2-10 VDC (Default) Adjustable with MFT	5 kΩ Resistive Feedback	10 kΩ Resistive Feedback	1 SPDT, 3A (0.5A Inductive) @250V	S1A or S2A	Potentiometer	Enclosure (Part No. +N4 or +N4H) with Terminal Strip
GMB Series 360 in-lbs [40 Nm] Approx. 90 sq. ft.	GMB24-3	150	●		6	4.0 (2.0)	●	●										●	●	●
	GMB24-SR	150	●		6.5	4.5 (2.0)			●					●				●	●	●
	GMB24-MFT† Ⓐ	150	●		7	4.0 (1.5)			●	●	●	●	●	●				●	●	
AMB Series 180 in-lbs [20 Nm] Approx. 45 sq. ft.	AMB24-3	95	●		5.5	2.5 (0.5)	●	●										●	●	●
	AMB24-3-S	95	●		5.5	2.5 (0.5)	●	●									●	●	●	
	AMB24-SR	95	●		5	2.5 (0.4)			●					●				●	●	●
	AMB24-MFT Ⓐ	150	●		6	3.5 (1.3)			●	●	●	●	●	●				●	●	
AMQB Series 140 in-lbs [16 Nm]	AMQB24-1	7	●		26	15 (1.5)	●											●	●	
NMB Series 90 in-lbs [10 Nm] Approx. 22 sq. ft.	NMB24-3	95	●		4	2.0 (0.2)	●	●										●	●	●
	NMCB24-3	45	●		4	2.5 (0.2)	●	●										●	●	
	NMB24-SR	95	●		5	2.5 (0.4)			●					●				●	●	●
	NMCB24-SR	45	●		5	2.5 (0.4)			●					●				●	●	
	NMB24-MFT Ⓐ	150	●		6	3.5 (1.3)			●	●	●	●	●	●				●	●	
NMQB Series 70 in-lbs [8 Nm]	NMQB24-1	4	●		23	13 (1.5)	●											●	●	
LMB Series 45 in-lbs [5 Nm] Approx. 11 sq. ft.	LMB24-3	95	●		2	1.5 (0.2)	●	●										●	●	
	LMCB24-3	35	●		2.5	1.5 (0.2)	●	●										●	●	
	LMB24-3.1	95	●		2	1.5 (0.2)	●	●										●	●	
	LMB24-3-S	95	●		2	1.5 (0.2)	●	●									●	●	●	
	LMB24-3-T	95	●		2	1.5 (0.2)	●	●										●	●	
	LMCB24-3-T	35	●		2.5	1.5 (0.2)	●	●										●	●	
	LMB24-3-T.1	95	●		2	1.5 (0.2)	●	●										●	●	
	LMB24-3-P5-T	95	●		2	1.5 (0.2)	●	●							●			●	●	
	LMB24-3-P5-T.1	95	●		2	1.5 (0.2)	●	●							●			●	●	
	LMB24-3-P10-T	95	●		2	1.5 (0.2)	●	●								●		●	●	
	LMB24-SR	95	●		3	1.5 (0.4)			●					●				●	●	
	LMCB24-SR	35	●		3	1.5 (0.4)			●					●				●	●	
	LMB24-SR.1	95	●		3	1.5 (0.4)			●					●				●	●	
	LMB24-SR-T	95	●		3	1.5 (0.4)			●					●				●	●	
	LMCB24-SR-T	35	●		3	1.5 (0.4)			●					●				●	●	
	LMB24-SR-T.1	95	●		3	1.5 (0.4)			●					●				●	●	
	LMB24-MFT Ⓐ	150	●		5	2.5 (1.2)			●	●	●	●	●	●				●	●	
	LMB24-HM Ⓑ	95	●		2	1.5 (0.2)												●	●	
	LMB24-10P-HM Ⓑ	95	●		2	1.5 (0.2)										●		●	●	
LMQB Series 35 in-lbs [4 Nm]	LMQB24-1	2.5	●		23	13 (1.5)	●											●	●	
CMB Series 18 in-lbs [2 Nm] Approx. 4.5 sq. ft.	CMB24-3	35	●		1.5	1.0 (0.2)	●	●												
	CMB24-3.1	35	●		1.5	1.0 (0.2)	●	●												
	CMB120-3	35		●	3.5	1.5 (1.0)	●	●												
	CMB24-3-T	35	●		1.5	1.0 (0.2)	●	●												
	CMB24-3-T.1	35	●		1.5	1.0 (0.2)	●	●												
	CMB24-SR-R	35	●		2.5	1.5 (0.5)			●					●						
	CMB24-SR-L	35	●		2.5	1.5 (0.5)			●					●						
AHB Series 101 lbf [450 N Force] 4" or 8" stroke	AHB24-3-100	150*	●		4.5	2.0 (0.5)	●	●												
	AHB24-3-200	150*	●		4.5	2.0 (0.5)	●	●												
	AHB24-SR-100	150*	●		4.5	2.5 (0.5)			●					●						
	AHB24-SR-200	150*	●		4.5	2.5 (0.5)			●					●						
AHQB Series 44 lbf [200 N Force]	AHQB24-1-100	7*	●		23	13 (1.5)	●													
LHB Series 34 lbf [150 N Force] 4" or 8" stroke	LHB24-3-100	150*	●		3	1.5 (0.5)	●	●												
	LHB24-3-T-100	150*	●		3	1.5 (0.5)	●	●												
	LHB24-3-200	150*	●		3	1.5 (0.5)	●	●												
	LHB24-SR-100	150*	●		3	1.5 (0.5)			●					●						
	LHB24-SR-200	150*	●		3	1.5 (0.5)			●					●						
LHQB Series 22 lbf [100 N Force]	LHQB24-1-100	3.5*	●		23	13 (1.5)	●													
LUB Series 27 in-lbs [3 Nm]	LUB24-3	150**	●		2.5	1.0 (0.5)	●	●												
	LUB24-SR	150**	●		3	3.0 (0.5)			●					●						

*Running time is per 4 inches [100 mm] of travel.
**Running time is 150 seconds per 90°.
† Dual mounting on a single shaft is possible for higher torque (-MFT wired Master-Slave). Please call Belimo customer service for details.
Ⓐ **Shipped default. 150 seconds running time, 2-10 VDC control input and feedback. Field programmable with MFT tools.**
Ⓑ **Drop-in replacement of LM24-M VAV actuator.**

067001 - 04/13 - Subject to change. © Belimo Aircontrols (USA), Inc.

Changing Parameters Just Became Your Simplest Job.



The choice is yours.
The ZTH-GEN US offers many of the same functions as Belimo's PC Tool Software, without having to connect the actuator up to a laptop. So no computer-balancing act required.

However, if the user wants to trend operations and test the actuator for normal operation, the PC Software Tool is still best choice. The PC Tool allows the user to chart and save operational characteristics and load saved programs for use on other actuators for faster programming.

Product Features

Technical Data	ZTH-GEN US	PC-TOOL
Program Min and Max Values	•	•
Program Min, Mid and Max Values		•
Program Run Time	•	•
Modify the Control Input	•	•
Program the Feedback Output	•	•
Move the Actuator	•	•
Personalize the Actuator	View only	Change
Error Messages	View only	Erase
Functional Test		•
Chart Trends and Operations		•

Custom Non-Spring Return Damper Actuator Product Range

		Custom Options		Running Time(s)	Power Supply		Power Consumption		Control Input					Control Input MFT				Position Feedback		Add-on		NEMA 4X
		10 ft. (3m) Cable / 16 ft. (5m) Cable	Terminal Strip NEMA 1/IP20 / 2/IP54	Motor Drive Range (Default)	24 VAC +/- 20%, VDC +/- 10%	100 to 240 VAC	VA Rating	Wattage Running (Holding)	On/Off	Floating Point	2-10 VDC (Default) 4-20 mA (w/500 Ω Resistor)	0-20 V Phasecut	Honeywell Series 90, 0-135 Ω	On/Off	Floating Point	Start and Span adj., Start 0.5 to 30 VDC, Span 2.5 to 32 VDC	PWM adj., 0.02 to 50.0 Seconds	2-10 VDC (Default)	VDC Variable, Start 0 to 8, Span 2 to 10 VDC	S1A or S2A	Potentiometer	Enclosure (Part No. +N4 or +N4H)
GMX Series 360 in-lbs [40 Nm] Approx. 90 sq. ft.	GMX24-3	●		150	●		6	4.0 (2.0)	●	●										●	●	
	GMX24-SR	●		150	●		6.5	4.5 (2.0)			●							●		●	●	
	GMX24-PC	●		150	●		7	4.0 (1.5)				●						●		●	●	
	GMX120-3	●		150		●	7	4.0 (2.0)	●	●										●	●	
	GMX24-MFT†	●		75-300 (150)	●		7	4.0 (1.5)			●			●	●	●	●	●	●	●	●	●
	GMX24-MFT95†	●		75-300 (150)	●		7	4.0 (1.5)					●					●	●	●	●	
AMX Series 180 in-lbs [20 Nm] Approx. 45 sq. ft.	AMX24-3	●		95	●		5.5	2.5 (0.5)	●	●										●	●	
	AMX24-3-T		●	95	●		5.5	2.5 (0.5)	●	●										●	●	
	AMX24-SR	●		95	●		5	2.5 (0.4)			●							●		●	●	
	AMX24-SR-T		●	95	●		5	2.5 (0.4)			●							●		●	●	
	AMX24-PC	●		90	●		5.5	3.5 (1.3)				●						●		●	●	
	AMX120-3	●		95		●	7	3.0 (0.6)	●	●										●	●	
	AMX120-SR	●		95		●	7.5	4.0 (1.0)			●							●		●	●	
	AMX24-MFT	●		90-300 (150)	●		6	3.5 (1.3)			●			●	●	●	●	●	●	●	●	●
	AMCX24-MFT	●		35-120 (35)	●		6	3.5 (1.3)			●			●	●	●	●	●	●	●	●	
	AMX24-MFT95	●		75-150 (150)	●		6	3.5 (1.3)					●					●	●	●	●	
AMQ Series 140 in-lbs [16 Nm]	AMQX24-MFT	●		7-15 (7)	●		26	15 (1.5)			●			●	●	●	●	●	●	●	●	
NMX Series 90 in-lbs [10 Nm] Approx. 22 sq. ft.	NMX24-3	●		95	●		4	2.0 (0.2)	●	●										●	●	
	NMX24-3-T		●	95	●		4	2.0 (0.2)	●	●										●	●	
	NMX24-SR	●		95	●		5	2.5 (0.4)			●							●		●	●	
	NMX24-SR-T		●	95	●		5	2.5 (0.4)			●							●		●	●	
	NMX24-PC	●		150	●		6	3.5 (1.3)				●						●		●	●	
	NMX120-3	●		150		●	5.5	2.5 (0.6)	●	●										●	●	
	NMX120-SR	●		150		●	6.5	3.5 (1.0)			●							●		●	●	
	NMX24-MFT	●		45-150 (150)	●		6	3.5 (1.3)			●			●	●	●	●	●	●	●	●	●
	NMX24-MFT95	●		45-150 (150)	●		6	3.5 (1.3)					●					●	●	●	●	
	NMCX24-MFT	●		20-75 (20)	●		5	3.0 (0.6)			●							●	●	●	●	
NMQ Series 70 in-lbs [8 Nm]	NMQX24-MFT	●		4-20 (4)	●		23	13 (1.5)			●			●	●	●		●	●	●	●	
LMX Series 45 in-lbs [5 Nm] Approx. 11 sq. ft.	LMX24-3	●		95	●		2	1.5 (0.2)	●	●										●	●	
	LMX24-3-T		●	95	●		2	1.5 (0.2)	●	●										●	●	
	LMX24-SR	●		95	●		3	1.5 (0.4)			●							●		●	●	
	LMX24-SR-T		●	95	●		3	1.5 (0.4)			●							●		●	●	
	LMX24-PC	●		95	●		5	2.5 (1.2)				●						●		●	●	
	LMX120-3	●		150		●	4	2.0 (0.5)	●	●										●	●	
	LMX120-SR	●		150		●	4.5	2.5 (1.0)			●							●		●	●	
	LMX24-MFT	●		35-200 (150)	●		5	2.5 (1.2)			●			●	●	●	●	●	●	●	●	
	LMX24-MFT95	●		35-150 (150)	●		5	2.5 (1.2)					●					●	●	●	●	
LMQ Series 35 in-lbs [4 Nm]	LMQX24-MFT	●		2.5-10 (2.5)	●		23	13 (1.5)			●			●	●	●		●	●	●	●	
AHX Series 101 lbf [450 N Force] 4" or 8" stroke	AHX24-3*	●		150*	●		4.5	2.0 (0.5)	●	●												
	AHX24-SR*	●		150*	●		4.5	2.5 (0.5)			●							●				
	AHX24-MFT*	●		150*	●		6	3.5 (1.3)			●			●	●	●	●	●	●			
AHQ Series 44 lbf [200 N Force]	AHQX24-MFT-100	●		7-20 (7)*	●		23	13 (1.5)			●			●	●	●	●	●	●			
LHX Series 34 lbf [150 N Force] 4" or 8" stroke	LHX24-3*	●		150*	●		3	1.5 (0.5)	●	●												
	LHX24-SR*	●		150*	●		3	1.5 (0.5)			●							●				
	LHX24-MFT*	●		75-150 (150)*	●		5	2.5 (1.2)			●			●	●	●	●	●	●			
LHQ Series 22 lbf [100 N Force]	LHQX24-MFT-100	●		3.5-15 (3.5)*	●		23	13 (1.5)			●			●	●	●		●	●			
LUX Series 27 in-lbs [3 Nm]	LUX24-3	●		150	●		2.5	1.0 (0.5)	●	●												
	LUX24-SR	●		150	●		3	1.5 (0.5)			●							●				
	LUX24-MFT	●		75-150 (150)	●		5	2.5 (1.2)			●			●	●	●	●	●	●			

* The LH and AH linear series actuators come in three different stroke lengths [4, 8 or 12 in]. The part number is followed by -100, -200, -300 respectively. The default running time is 150 seconds per 4 inches [100 mm]. Running time is adjustable depending on model:
LH Series: 70-270, 140-540, 200-810, on the -100, -200, -300 models respectively.
AH Series: 150-600, 300-1200, 450-1800, on the -100, -200, -300 models respectively.

LHQ and AHQ available in 4 inch version only.

† Dual mounting on a single shaft is possible for higher torque (-MFT wired Master-Slave). Please call Belimo customer service for details.

067001 - 04/13 - Subject to change. © Belimo Aircontrols (USA), Inc.

Actuator Specifications

Torque	360 in-lbs [40 Nm] minimum
Angle of rotation♦	95°, adjustable with mechanical end stops MFT electronically variable 0-100%
Fits shaft diameter	1/2" to 1.05" (centers on 3/4" shaft with insert and on 1" without insert)
Position indication	reflective visual indicator (snap-on)
Manual override	external push-button
Direction of rotation♦	external switch
Dimensions	9.02" x 4.55" x 2.87" [229.2 x 115.6 x 72.9 mm]
Electrical connection	3 ft., 18 GA plenum cable, ½" conduit fitting
Overload protection	electronic throughout rotation
Auxiliary switch(es)	add-on: 1 or 2 SPDT, 3A (0.5A inductive) @ 250V adjustable 5° to 85°
Housing	NEMA 2/IP54, enclosure Type 2
Agency listings	cULus according to UL 60730-1A/-2-14, CAN/CSA E60730-1:02, CE according to 2004/108/EC and 2006/95/EC



GMB24-SR

MFT

MFT= 2-10 VDC Default, or Set, Modify, Read:

- **Control (PWM, VDC range, Floating Point)**
- **Feedback (0-10 VDC, 0-5 VDC, 2-10 VDC, Variable)**
- **Motion (run time)**

All actuators have BDCM

LISTED 94 D5 TEMP. IND. & REG. EQUIP.

5 YEAR WARRANTY

Non-Spring Return Damper Actuators

Models	Control Input	Feedback	Power Supply	Running Time(s) [Default]	VA Rating	Auxiliary Switch	List Price
BASIC PRODUCTS							
GMB24-3	On/Off, Floating Point	Add-on	24 VAC/DC	150 seconds	6	Add-on	$463.00
GMB24-SR	2-10 VDC (4-20 mA*)	2-10 VDC	24 VAC/DC	150 seconds	6.5	Add-on	$617.00
GMB24-MFT ‡‡	2-10 VDC (4-20 mA*)	2-10 VDC	24 VAC/DC	150 seconds	7	Add-on	$685.00

♦ Variable with MFT.

* With 500 Ω resistor (ZG-R01).

‡‡ For applications that require more torque the GMB Series can be dual mounted. A maximum of 2 GMB24-MFT/GMX24-MFT Series actuators can be mechanically connected to one damper or valve shaft. The torque is 720 in-lbs.

067001 - 04/13 - Subject to change. © Belimo Aircontrols (USA), Inc.



GMB...
B = Basic stocked product

- Standard 150 second run time.
- Standard 3/4" to 1.05" clamp.
- Standard 3' plenum cable with conduit connector.

Typical Lead Time: 1 day

GMX...
X = Customizable product

- Choice of 10' or 16' cable with conduit connector.
- Option of 3' right angle cables for tight spaces (-3 version only).
- Factory programming for run time, control signal and feedback.

Typical Lead Time: 3 days or less

Reorder number consists of options which differ from standard product. This number is printed on the actuator for easy re-ordering.
For example:

Reorder # for a GMX24-MFT is: GM1101C3A01

4 No Charge
3 $28.00
2 No Charge
1 $685.00
$713.00 Final Price

1 ACTUATOR TYPE

TYPE	Power	Control Input	Feedback	Code 1	List Price
GMX24-3	24V	On/Off, Floating Point	-	GM540	$463.00
GMX120-3	120V	On/Off, Floating Point	-	GM580	$505.00
GMX24-SR	24V	2-10 VDC	2-10 VDC	GM560	$617.00
GMX24-PC*	24V	0-20V Phasecut	2-10 VDC	GM0P0	$744.00
GMX24-MFT	24V	Various	Various	GM110	$685.00
GMX24-MFT95*	24V	0-135 Ω	2-10 VDC	GM0M0	$744.00
GMX24-LON	24V	LON	2-10 VDC	GM760	$909.00

2 CLAMP

TYPE	Size	Code 2	List Price
Standard Universal Clamp	3/4" to 1.05"	1	No Charge

3 CABLES

CABLE (with conduit fitting)	Size	Code 3	List Price
24V Plenum Rated	3 ft.	C1	No Charge
	10 ft.	C3	$28.00
	16 ft.	C5	$48.00
120V Appliance Rated	3 ft.	A1	No Charge
	10 ft.	A3	$28.00
	16 ft.	A5	$48.00

4 PROGRAM

	Running Time	Control Input	Feedback	Code 4	List Price
-3	150 seconds	On/Off, Floating Point	-	000	No Charge
-SR	150 seconds	2-10 VDC	2-10 VDC	000	No Charge
-MFT	150 seconds	2-10 VDC	2-10 VDC	A01	No Charge
	150 seconds	0.5-10 VDC	0.5-10 VDC	A37	No Charge
	120 seconds	0.5-10 VDC	0.5-10 VDC	A47	No Charge
	95 seconds	2-10 VDC	2-10 VDC	A91	No Charge
	150 seconds	Floating Point	2-10 VDC	F01	No Charge
	150 seconds	On/Off	2-10 VDC	J02	No Charge
	150 seconds	PWM (0.02-5 sec)	2-10 VDC	W02	No Charge

Multi-Function Technology offers a wide variety of programmable control inputs and feedback signals. Parameters can be set for voltage control (VDC), time proportional control (PWM), floating point, on/off and feedback signal. Parameters can be changed on-site to optimize/enable application. You can also set, modify or read position, running time, mechanical working range, address, status, and diagnostics.

For additional MFT programming codes, refer to MFT technical documentation or visit www.belimo.us.

* PC and MFT95 versions are only available with a 3' cable.

067001 - 04/13 - Subject to change. © Belimo Aircontrols (USA), Inc.

Actuator Specifications

Torque	180 in-lbs [20 Nm] minimum
Angle of rotation♦	95°, adjustable with mechanical end stops MFT electronically variable 0-100%
Fits shaft diameter	½" to 1.05" (centers on ½"and ¾" shafts with insert and 1.05" without insert)
Position indication	reflective visual indicator (snap-on)
Manual override	external push-button
Direction of rotation♦	external switch
Dimensions	7.47" x 3.46" x 2.49" [189.8 x 88 x 64 mm]
Electrical connection	3 ft., 18 GA plenum cable, 1/2" conduit fitting
Overload protection	electronic throughout rotation
Auxiliary switch(es)	(-S) models: 1 SPDT, 3A (0.5A inductive) @ 250V adjustable 5° to 85°, add-on: 1 or 2 SPDT, 3A (0.5 A inductive) @ 250V one switch adjustable 25° to 85°
Housing	NEMA 2/IP54 (NEMA 1/IP20 for -T models), enclosure Type 2
Agency listings	cULus according to UL 60730-1A/-2-14, CAN/CSA E60730-1:02, CE according to 2004/108/EC and 2006/95/EC



AMB24-3-S
(with conduit fittings)



AMX24-3-T
(with terminal strip)

MFT

MFT= 2-10 VDC Default, or Set, Modify, Read:

- **Control – AM (PWM, VDC range, Floating Point)**
- **Feedback (0-10 VDC, 0-5 VDC, 2-10 VDC, Variable)**
- **Motion (run time)**

All actuators have BDCM

LISTED 94 D5 TEMP. IND. & REG. EQUIP.

5 YEAR WARRANTY

NON-SPRING RETURN

Models	Control Input	Feedback	Power Supply	Running Time(s) [Default]	VA Rating	Auxiliary Switch	List Price
Non-Spring Return Damper Actuators							
BASIC PRODUCTS							
AMB24-3	On/Off, Floating Point	Add-on	24 VAC/DC	95 seconds	5.5	Add-on	$327.00
AMB24-3-S	On/Off, Floating Point	Add-on	24 VAC/DC	95 seconds	5.5	Built-in	$430.00
AMB24-SR	2-10 VDC (4-20 mA*)	2-10 VDC	24 VAC/DC	95 seconds	5	Add-on	$475.00
AMB24-MFT	2-10 VDC (4-20 mA*)	2-10 VDC	24 VAC/DC	150 seconds	6	Add-on	$515.00

♦ Variable with MFT.
* With 500 Ω resistor (ZG-R01).

067001 - 04/13 - Subject to change. © Belimo Aircontrols (USA), Inc.



AMB...
B = Basic stocked product

- Standard 150 second run time.
- Standard 1/2" to 1.05" clamp.
- Standard 3' plenum cable with conduit connector.

Typical Lead Time: 1 day

AMX...
X = Customizable product

- Choice of 10' or 16' cable with conduit connector.
- Option of 3' right angle cables for tight spaces (-3 version only).
- Reversible clamp.
- Factory programming for run time, control signal and feedback.

Typical Lead Time: 3 days or less

Reorder number consists of options which differ from standard product. This number is printed on the actuator for easy re-ordering.
For example:

Reorder # for a AMX24-MFT is: AM110 1 C3 A01

4 No Charge
3 $28.00
2 No Charge
1 $515.00
$543.00 Final Price

1 ACTUATOR TYPE

TYPE	Power	Control Input	Feedback	Code 1	List Price
AMX24-3	24V	On/Off, Floating Point	-	AM000	$327.00
AMX24-3-T	24V	On/Off, Floating Point	-	AMT00	$304.00
AMX24-3-S	24V	On/Off, Floating Point	-	AM020	$430.00
AMX120-3	120V	On/Off, Floating Point	-	AM060	$407.00
AMX24-SR	24V	2-10 VDC	2-10 VDC	AM030	$475.00
AMX120-SR	120V	2-10 VDC	2-10 VDC	AM450	$559.00
AMX24-PC*	24V	0-20V Phasecut	2-10 VDC	AM0N0	$538.00
AMX24-MFT	24V	Various	Various	AM110	$515.00
AMX24-MFT95*	24V	0-135 Ω	2-10 VDC	AM0L0	$538.00

2 CLAMP

TYPE	Size	Code 2	List Price
Standard Universal Clamp	3/4" to 1.05"	1	No Charge
	Reversible	7	$16.00

3 CABLES

CABLE (with conduit fitting)	Size	Code 3	List Price
24V Plenum Rated	3 ft.	C1	No Charge
	10 ft.	C3	$28.00
	16 ft.	C5	$48.00
120V Appliance Rated	3 ft.	A1	No Charge
	10 ft.	A3	$28.00
	16 ft.	A5	$48.00

4 PROGRAM

	Running Time	Control Input	Feedback	Code 4	List Price
-3	150 seconds	On/Off, Floating Point	-	000	No Charge
	95 seconds	On/Off, Floating Point	-	002	No Charge
-SR	150 seconds	2-10 VDC	2-10 VDC	000	No Charge
	95 seconds	2-10 VDC	2-10 VDC	002	No Charge
-MFT	150 seconds	2-10 VDC	2-10 VDC	A01	No Charge
	150 seconds	0.5-10 VDC	0.5-10 VDC	A02	No Charge
	100 seconds	0.5-10 VDC	0.5-10 VDC	A28	No Charge
	150 seconds	Floating Point	2-10 VDC	F01	No Charge
	150 seconds	On/Off	0.5-10 VDC	J02	No Charge
	150 seconds	PWM (0.02-5 sec)	2-10 VDC	W02	No Charge
	150 seconds	PWM (0.1-25.5 sec)	2-10 VDC	W03	$34.00

Multi-Function Technology offers a wide variety of programmable control inputs and feedback signals. Parameters can be set for voltage control (VDC), time proportional control (PWM), floating point, on/off and feedback signal. Parameters can be changed on-site to optimize/enable application. You can also set, modify or read position, running time, mechanical working range, address, status, and diagnostics.

For additional MFT programming codes, refer to MFT technical documentation or visit www.belimo.us.

* PC and MFT95 versions are only available with a 3' cable.

067001 - 04/13 - Subject to change. © Belimo Aircontrols (USA), Inc.

Actuator Specifications

Torque	90 in-lbs [10 Nm] minimum
Angle of rotation♦	95°, adjustable with mechanical end stops MFT electronically variable 0-100%
Fits shaft diameter	½" to 1.05" (centers on ½"and ¾" shafts with insert and 1.05" without inserts)
Position indication	reflective visual indicator (snap-on)
Manual override	external push-button
Direction of rotation♦	external switch
Dimensions	6.88" x 3.15" x 2.42" [174.8 x 80 x 61.4 mm]
Electrical connection	3 ft., 18 GA plenum cable, ½" conduit fitting
Overload protection	electronic throughout rotation
Auxiliary switch(es)	add-on: 1 or 2 SPDT, 3A (0.5A inductive) @ 250V adjustable 5° to 85°
Housing	NEMA 2/IP54, enclosure Type 2
Agency listings	cULus according to UL 60730-1A/-2-14, CAN/CSA E60730-1:02, CE according to 2004/108/EC and 2006/95/EC



NMB24-3

MFT

MFT= 2-10 VDC Default, or Set, Modify, Read:

- **Control – NM (PWM, VDC range, Floating Point)**
- **Feedback (0-10 VDC, 0-5 VDC, 2-10 VDC, Variable)**
- **Motion (run time)**

All actuators have BDCM

LISTED 94 05 TEMP. IND. & REG. EQUIP.

5 YEAR WARRANTY

Models	Control Input	Feedback	Power Supply	Running Time(s) [Default]	VA Rating	Auxiliary Switch	List Price
	Non-Spring Return Damper Actuators						
BASIC PRODUCTS							
NMB24-3	On/Off, Floating Point	Add-on	24 VAC/DC	95 seconds	4	Add-on	$233.00
NMCB24-3	On/Off, Floating Point	Add-on	24 VAC/DC	45 seconds	4	Add-on	$273.00
NMB24-SR	2-10 VDC (4-20 mA*)	2-10 VDC	24 VAC/DC	95 seconds	5	Add-on	$327.00
NMCB24-SR	2-10 VDC (4-20 mA*)	2-10 VDC	24 VAC/DC	45 seconds	5	Add-on	$370.00
NMB24-MFT	2-10 VDC (4-20 mA*)	2-10 VDC	24 VAC/DC	150 seconds	6	Add-on	$414.00

♦ Variable with MFT.
* With 500 Ω resistor (ZG-R01).

067001 - 04/13 - Subject to change. © Belimo Aircontrols (USA), Inc.



NMB...
B = Basic stocked product

- Standard 150 second run time.
- Standard 1/2" to 1.05" clamp.
- Standard 3' plenum cable with conduit connector.

Typical Lead Time: 1 day

NMX...
X = Customizable product

- Choice of 10' or 16' cable with conduit connector.
- Option of 3' right angle cables for tight spaces (-3 version only).
- Form fit available in 12x12 mm, 10x10 mm or 8x8 mm.
- Factory programming for run time, control signal and feedback.

Typical Lead Time: 3 days or less

Reorder number consists of options which differ from standard product. This number is printed on the actuator for easy re-ordering.
For example:

Reorder # for a NMX24-MFT is: NM100 1 C3 A01

4 No Charge
3 $28.00
2 No Charge
1 $414.00
$442.00 Final Price

1 ACTUATOR TYPE

TYPE	Power	Control Input	Feedback	Code 1	List Price
NMX24-3	24V	On/Off, Floating Point	-	NM000	$233.00
NMX24-3-T	24V	On/Off, Floating Point	-	NMT00	$209.00
NMX120-3	120V	On/Off, Floating Point	-	NM060	$271.00
NMX24-SR	24V	2-10 VDC	2-10 VDC	NM030	$327.00
NMX24-SR-T	24V	2-10 VDC	2-10 VDC	NMTW0	$303.00
NMX120-SR	120V	2-10 VDC	2-10 VDC	NM450	$383.00
NMX24-PC*	24V	0-20V Phasecut	2-10 VDC	NM0ND	$457.00
NMX24-MFT	24V	Various	Various	NM100	$414.00
NMX24-MFT95*	24V	0-135 Ω	2-10 VDC	NM0LD	$480.00
NMX24-LON	24V	LON	2-10 VDC	NM650	$797.00

2 CLAMP

TYPE	Size	Code 2	List Price
Standard Universal Clamp	3/4" to 1.05"	1	No Charge
	Reversible	7	$16.00

3 CABLES

CABLE (with conduit fitting)	Size	Code 3	List Price
24V Plenum Rated	3 ft.	C1	No Charge
	10 ft.	C3	$28.00
	16 ft.	C5	$48.00
120V Appliance Rated	3 ft.	A1	No Charge
	10 ft.	A3	$28.00
	16 ft.	A5	$48.00

4 PROGRAM

	Running Time	Control Input	Feedback	Code 4	List Price
-3	150 seconds	On/Off, Floating Point	-	000	No Charge
	95 seconds	On/Off, Floating Point	-	002	No Charge
-SR	150 seconds	2-10 VDC	2-10 VDC	000	No Charge
	95 seconds	2-10 VDC	2-10 VDC	002	No Charge
-MFT	150 seconds	2-10 VDC	2-10 VDC	A01	No Charge
	150 seconds	0.5-10 VDC	0.5-10 VDC	A02	No Charge
	100 seconds	0.5-10 VDC	0.5-10 VDC	A28	No Charge
	95 seconds	0.5-10 VDC	0.5-10 VDC	ACA	No Charge
	150 seconds	Floating Point	2-10 VDC	F01	No Charge
	150 seconds	On/Off	2-10 VDC	J02	No Charge
	150 seconds	PWM (0.02-5 sec)	2-10 VDC	W02	No Charge

Multi-Function Technology offers a wide variety of programmable control inputs and feedback signals. Parameters can be set for voltage control (VDC), time proportional control (PWM), floating point, on/off and feedback signal. Parameters can be changed on-site to optimize/enable application. You can also set, modify or read position, running time, mechanical working range, address, status, and diagnostics.

For additional MFT programming codes, refer to MFT technical documentation or visit www.belimo.us.

* PC and MFT95 versions are only available with a 3' cable.

067001 - 04/13 - Subject to change. © Belimo Aircontrols (USA), Inc.

Actuator Specifications

Torque	45 in-lbs [5 Nm] minimum
Angle of rotation♦	95°, adjustable with mechanical end stops MFT electronically variable 0-100%
Fits shaft diameter	¼" to 5/8" (self-centers on 5/8" shaft)
Position indication	reflective visual indicator (snap-on)
Manual override	external push-button
Direction of rotation♦	external switch
Dimensions	6.57" x 2.6" x 2.34" [167 x 66 x 59.4 mm]
Electrical connection	3 ft., 18 GA plenum rated cable, 1/2" conduit fitting terminal strip (-T) models
Overload protection	electronic throughout rotation
Auxiliary switch(es)	(-S) Models: 1 SPDT, 3A (0.5A inductive) @ 250V adjustable 5° to 85° add-on: 1 or 2 SPDT, 3A (0.5A inductive) @ 250V one switch adjustable 5° to 85°
Housing	NEMA 2/IP54 (NEMA 1/IP20 for -T models), enclosure Type 2
Agency listings	cULus according to UL 60730-1A/-2-14, CAN/CSA E60730-1:02, CE according to 2004/108/EC and 2006/95/EC



LMB24-3-S
(shown with conduit fittings)



LMB24-3-T
(shown with terminal strip)

MFT

MFT= 2-10 VDC Default, or Set, Modify, Read:

- **Control – LM (PWM, VDC range, Floating Point)**
- **Feedback (0-10 VDC, 0-5 VDC, 2-10 VDC, Variable)**
- **Motion (run time)**

All actuators have BDCM

5 YEAR WARRANTY

Non-Spring Return Damper Actuators

Models	Control Input	Feedback	Power Supply	Running Time(s)	VA Rating	Auxiliary Switch	List Price
BASIC PRODUCTS							
LMB24-3	On/Off, Floating Point	Add-on	24 VAC/DC	95 seconds	2	Add-on	$172.00
LMB24-3-T	On/Off, Floating Point	Add-on	24 VAC/DC	95 seconds	2	Add-on	$152.00
LMB24-3-S	On/Off, Floating Point	Add-on	24 VAC/DC	95 seconds	2	Built-in	$259.00
LMB24-3-P5-T	On/Off, Floating Point	5 kΩ	24 VAC/DC	95 seconds	2	Add-on	$259.00
LMB24-3-P10-T	On/Off, Floating Point	10 kΩ	24 VAC/DC	95 seconds	2	Add-on	$259.00
LMCB24-3	On/Off, Floating Point	Add-on	24 VAC/DC	35 seconds	3	Add-on	$212.00
LMCB24-3-T	On/Off, Floating Point	Add-on	24 VAC/DC	35 seconds	3	Add-on	$193.00
LMB24-SR	2-10 VDC (4-20 mA*)	2-10 VDC	24 VAC/DC	95 seconds	3	Add-on	$279.00
LMB24-SR-T	2-10 VDC (4-20 mA*)	Add-on	24 VAC/DC	95 seconds	3	Add-on	$248.00
LMCB24-SR	2-10 VDC (4-20 mA*)	2-10 VDC	24 VAC/DC	35 seconds	3	Add-on	$324.00
LMCB24-SR-T	2-10 VDC (4-20 mA*)	Add-on	24 VAC/DC	35 seconds	3	Add-on	$300.00
LMB24-MFT	2-10 VDC (4-20 mA*)	2-10 VDC	24 VAC/DC	150 seconds	5	Add-on	$364.00
LMB24-HM	+/- 5 to 14 VDC	Add-on	24 VAC/DC	95 seconds	2	Add-on	$232.00
LMB24-10P-HM	+/- 5 to 14 VDC	10 kΩ	24 VAC/DC	95 seconds	2	Add-on	$258.00
BULK PACKAGING - BULK PACK MODELS ARE THE SAME AS STANDARD MODELS EXCEPT FOR PACKAGING.							
LMB24-3.1 (UNITS PER CARTON 24)	On/Off, Floating Point	Add-on	24V	95 seconds	2	Add-on	$156.00 each
LMB24-3-T.1 (UNITS PER CARTON 36)	On/Off, Floating Point	Add-on	24V	95 seconds	2	Add-on	$114.00 each
LMB24-3-P5-T.1 (UNITS PER CARTON 36)	On/Off, Floating Point	5 kΩ	24V	95 seconds	2	Add-on	$247.00 each
LMB24-SR.1 (UNITS PER CARTON 24)	2-10 VDC (4-20 mA*)	Add-on	24V	95 seconds	3	Add-on	$267.00 each
LMB24-SR-T.1 (UNITS PER CARTON 36)	2-10 VDC (4-20 mA*)	Add-on	24V	95 seconds	3	Add-on	$232.00 each

♦ Variable with MFT.
* With 500 Ω resistor (ZG-R01).

067001 - 04/13 - Subject to change. © Belimo Aircontrols (USA), Inc.



LMB...

B = Basic stocked product

- Standard 95 second run time.
- Standard 5/8" clamp.
- Standard 3' plenum cable with conduit connector.

Typical Lead Time: 1 day

LMX...

X = Customizable product

- Choice of 10' or 16' cable with conduit connector.
- Option of 3' right angle cables for tight spaces (-3 version only).
- Form fit available in 12x12 mm, 10x10 mm or 8x8 mm.
- Factory programming for run time, control signal and feedback.

Typical Lead Time: 3 days or less

Reorder number consists of options which differ from standard product. This number is printed on the actuator for easy re-ordering.
For example:

Reorder # for a LMX24-MFT is: LM100 1 C3 A01

- 4 — No Charge
- 3 — $28.00
- 2 — No Charge
- 1 — $364.00

$392.00 Final Price

1 ACTUATOR TYPE

TYPE	Power	Control Input	Feedback	Code 1	Price List
LMX24-3	24V	On/Off, Floating Point	-	LM000	$172.00
LMX24-3-S	24V	On/Off, Floating Point	-	LM020	$259.00
LMX24-3-T	24V	On/Off, Floating Point	-	LMT00	$152.00
LMX120-3	120V	On/Off, Floating Point	-	LM060	$219.00
LMX24-SR	24V	2-10 VDC	2-10 VDC	LM030	$279.00
LMX120-SR	120V	2-10 VDC	2-10 VDC	LM450	$339.00
LMX24-PC*	24V	0-20V Phasecut	2-10 VDC	LM0N0	$421.00
LMX24-MFT	24V	Various	Various	LM100	$364.00
LMX24-MFT95*	24V	0-135 Ω	2-10 VDC	LM0M0	$421.00
LMX24-LON	24V	LON	2-10 VDC	LM650	$760.00

2 CLAMP

TYPE	Size	Code 2	List Price
Standard Universal Clamp	5/8"	1	No Charge
	3/8"	2	No Charge
	1/2"	4	No Charge
	3/4"	6	No Charge

3 CABLES

CABLE (with conduit fitting)	Size	Code 3	List Price
24V Plenum Rated	3 ft.	C1	No Charge
	10 ft.	C3	$28.00
	16 ft.	C5	$48.00
120V Appliance Rated	3 ft.	A1	No Charge
	10 ft.	A3	$28.00
	16 ft.	A5	$48.00

4 PROGRAM

	Running Time	Control Input	Feedback	Code 4	List Price
-3	150 seconds	On/Off, Floating Point	-	000	No Charge
	95 seconds	On/Off, Floating Point	-	002	No Charge
	45 seconds	On/Off, Floating Point	-	004	No Charge
	35 seconds	On/Off, Floating Point	-	005	No Charge
-SR	150 seconds	2-10 VDC	2-10 VDC	000	No Charge
	95 seconds	2-10 VDC	2-10 VDC	002	No Charge
-MFT	150 seconds	2-10 VDC	2-10 VDC	A01	No Charge
	150 seconds	0.5-10 VDC	0.5-10 VDC	A02	No Charge
	150 seconds	Floating Point	2-10 VDC	F01	No Charge
	150 seconds	On/Off	2-10 VDC	J02	No Charge
	150 seconds	PWM (0.02-5 sec)	2-10 VDC	W02	No Charge
	100 seconds	0.5-10 VDC	0.5-10 VDC	A28	$34.00

Multi-Function Technology offers a wide variety of programmable control inputs and feedback signals. Parameters can be set for voltage control (VDC), time proportional control (PWM), floating point, on/off and feedback signal. Parameters can be changed on-site to optimize/enable application. You can also set, modify or read position, running time, mechanical working range, address, status, and diagnostics.

For additional MFT programming codes, refer to MFT technical documentation or visit www.belimo.us.

* PC and MFT95 versions are only available with a 3' cable.

NON-SPRING RETURN

067001 - 04/13 - Subject to change. © Belimo Aircontrols (USA), Inc.

Quick Running Series

Direct Coupled, Non-Spring Return Damper Actuators

Actuator Specifications

Torque	AMQ	140 in-lbs [16Nm] minimum
	NMQ	70 in-lbs [8Nm] minimum
	LMQ	35 in-lbs [4Nm] minimum
	AHQ	44 lbf [200N] minimum
	LHQ	22 lbf [100N] minimum
Angle of rotation♦		95°, adjustable with mechanical end stops MFT electronically variable 0-100%
Fits shaft diameter		½" to 1.05" (centers on ½"and ¾" shafts with insert and 1.05" without inserts)
Position indication		reflective visual indicator (snap-on)
Manual override		external push-button
Direction of rotation♦		external switch
Dimensions	AMQ	9.02" x 4.55" x 2.87" [229.2 x 115.6 x 72.9 mm]
	NMQ	7.47" x 3.46" x 2.49" [189.7 x 87.8 x 63.2 mm]
	LMQ	6.88" x 3.15" x 2.42" [174.8 x 80.0 x 61.5 mm]
	AHQ	7.00" x 3.19" x 3.58" [178.0 x 81.0 x 91.0 mm]
	LHQ	5.7" x 2.46" x 3.11" [144.8 x 62.48 x 79.0 mm]
Electrical connection		3 ft., 18 GA plenum cable, ½" conduit fitting
Overload protection		electronic throughout rotation
Auxiliary switch(es)		add-on: 1 or 2 SPDT, 3A (0.5A inductive) @ 250V adjustable 5° to 85°
Housing		NEMA 2/IP54, enclosure Type 2
Agency listings		cULus according to UL 60730-1A/-2-14, CAN/CSA E60730-1:02, CE according to 2004/108/EC and 2006/95/EC



NMQB24-MFT



AHQB24-1-100



LHQX24-MFT-100

MFT

MFT= 2-10 VDC Default, or Set, Modify, Read:

- **Control – VDC range**
- **Feedback (0-10 VDC, 0-5 VDC, 2-10 VDC, Variable)**
- **Motion (run time)**

All actuators have BDCM

LISTED 94 05 TEMP. IND. & REG. EQUIP.

5 YEAR WARRANTY

NON-SPRING RETURN

Non-Spring Return Damper Actuators

Models	Control Input	Feedback	Power Supply	Running Time(s) [Default]	VA Rating	Auxiliary Switch	Cable Length	List Price
BASIC PRODUCTS								
AMQB24-1	On/Off	Add-on	24 VAC/DC	7 seconds	23	Add-on	3 ft.	$541.00
AMQB24-MFT	2-10 VDC (4-20mA*)	2-10 VDC	24 VAC/DC	7 seconds	23	Add-on	3 ft.	$575.00
NMQB24-1	On/Off	Add-on	24 VAC/DC	4 seconds	20	Add-on	3 ft.	$484.00
NMQB24-MFT	2-10 VDC (4-20mA*)	2-10 VDC	24 VAC/DC	4 seconds	20	Add-on	3 ft.	$528.00
LMQB24-1	On/Off	Add-on	24 VAC/DC	2.5 seconds	20	Add-on	3 ft.	$434.00
LMQB24-MFT	2-10 VDC (4-20mA*)	2-10 VDC	24 VAC/DC	2.5 seconds	20	Add-on	3 ft.	$486.00
AHQB24-1-100	On/Off	N/A	24 VAC/DC	7 seconds	20	N/A	3 ft.	$622.00
AHQB24-MFT-100	2-10 VDC (4-20mA*)	2-10 VDC	24 VAC/DC	7 seconds	20	N/A	3 ft.	$666.00
LHQB24-1-100	On/Off	N/A	24 VAC/DC	4 seconds	20	N/A	3 ft.	$485.00
LHQB24-MFT-100	2-10 VDC (4-20mA*)	2-10 VDC	24 VAC/DC	4 seconds	20	N/A	3 ft.	$552.00
CUSTOMIZE PRODUCTS	**REORDER #**							
AMQX24-1	AMQD60 1C1 T0J	On/Off	Add-on	24 VAC/DC	7 seconds	23	Add-on	3 ft.	$541.00
NMQX24-1	NMQD60 1C1 T0H	On/Off	Add-on	24 VAC/DC	4 seconds	20	Add-on	3 ft.	$484.00
LMQX24-1	LMQD60 1C1 T0G	On/Off	Add-on	24 VAC/DC	2.5 seconds	20	Add-on	3 ft.	$434.00
AHQX24-1-100	AHQD60 0C1 T0J	On/Off	N/A	24 VAC/DC	7 seconds	20	N/A	3 ft.	$622.00
LHQX24-1-100	LHQD60 0C1 T0J	On/Off	N/A	24 VAC/DC	4 seconds	20	N/A	3 ft.	$485.00
MFT PRODUCTS	**REORDER #**							
AMQX24-MFT	AMQD00 1C1 T03	2-10 VDC(4-20mA*)♦	2-10 VDC♦	24 VAC/DC	7 seconds	23	Add-on	3 ft.	$575.00
NMQX24-MFT	NMQD00 1C1 T02	2-10 VDC(4-20mA*)♦	2-10 VDC♦	24 VAC/DC	4 seconds	20	Add-on	3 ft.	$528.00
LMQX24-MFT	LMQD00 1C1 T01	2-10 VDC(4-20mA*)♦	2-10 VDC♦	24 VAC/DC	2.5 seconds	20	Add-on	3 ft.	$486.00
AHQX24-MFT-100	AHQD00 0C1 T03	2-10 VDC(4-20mA*)♦	2-10 VDC♦	24 VAC/DC	7 seconds	20	N/A	3 ft.	$666.00
LHQX24-MFT-100	LHQD00 0C1 T02	2-10 VDC(4-20mA*)♦	2-10 VDC♦	24 VAC/DC	4 seconds	20	N/A	3 ft.	$552.00

♦ Variable with MFT.
* With 500 Ω resistor (ZG-R01).
For additional MFT programming codes, refer to MFT technical documentation or visit www.belimo.us.
NOTE: 10' and 16' cables are available with a $28.00 and $48.00 adder.

067001 - 04/13 - Subject to change. © Belimo Aircontrols (USA), Inc.

Actuator Specifications

Torque	NM	90 in-lbs [10 Nm] minimum
	AM	180 in-lbs [20 Nm] minimum
	GM	360 in-lbs [40 Nm] minimum
Angle of rotation♦		95°, adjustable with mechanical end stops MFT electronically variable 0-100%
Fits shaft diameter	NM, AM	0.5" to 0.75"
	GM	0.5" to 1.05"
Manual override		external push-button (NM and AM only)
Direction of rotation♦		external switch (NM and AM only)
Dimensions	NM, AM	10.66" x 5.28" x 4.88" [271 x 134 x 124 mm]
	GM	12.5" x 6.25" x 7.25" [318 x 159 x 184 mm]
Electrical connection		terminal strip (-T)
Overload protection		electronic throughout rotation
Auxiliary switch(es)		add-on: 1 or 2 SPDT, 3A (0.5A inductive) @ 250V adjustable 5° to 85°
Housing specification		NEMA 4/4X, IP66/IP67
Agency listings		cULus according to UL 60730-1A/-2-14, CAN/CSA E60730-1:02, CE according to 2004/108/EC and 2006/95/EC
Control shaft length	NM, AM	minimum 3/4" maximum 2-1/4"
	GM	minimum 1" maximum 2-1/4"



NM and AM NEMA 4/4X Housing



GM NEMA 4 Housing

MFT

MFT= 2-10 VDC Default, or Set, Modify, Read:

- **Control (PWM, VDC range, Floating Point)**
- **Feedback (0-10 VDC, 0-5 VDC, 2-10 VDC, Variable)**
- **Motion (run time)**

All actuators have BDCM

5 YEAR WARRANTY

NON-SPRING RETURN

Non-Spring Return Damper Actuators

Models	Control Input	Feedback	Power Supply	Running Time(s) [Default]	VA Rating	Built In Heater	Auxiliary Switch	List Price
BASIC PRODUCTS								
NMB24-3-T N4	On/Off, Floating Point	Add-on	24 VAC/DC	95 seconds	4		Add-on	$499.00
NMB24-3-T N4H*	On/Off, Floating Point	Add-on	24 VAC/DC	95 seconds	19	•	Add-on	$857.00
NMB24-SR-T N4	2-10 VDC (4-20mA)**	2-10 VDC	24 VAC/DC	95 seconds	5		Add-on	$593.00
NMB24-SR-T N4H*	2-10 VDC (4-20mA)**	2-10 VDC	24 VAC/DC	95 seconds	20	•	Add-on	$951.00
AMB24-3-T N4	On/Off, Floating Point	Add-on	24 VAC/DC	95 seconds	5.5		Add-on	$594.00
AMB24-3-T N4H*	On/Off, Floating Point	Add-on	24 VAC/DC	95 seconds	20.5	•	Add-on	$952.00
AMB24-SR-T N4	2-10 VDC (4-20mA)**	2-10 VDC	24 VAC/DC	95 seconds	5		Add-on	$743.00
AMB24-SR-T N4H*	2-10 VDC (4-20mA)**	2-10 VDC	24 VAC/DC	95 seconds	20	•	Add-on	$1,101.00
GMB24-3-T N4	On/Off, Floating Point	Add-on	24 VAC/DC	150 seconds	6		Add-on	$1,051.00
GMB24-3-T N4H*	On/Off, Floating Point	Add-on	24 VAC/DC	150 seconds	6	•	Add-on	$1,409.00
GMB24-SR-T N4	2-10 VDC (4-20mA)**	2-10 VDC	24 VAC/DC	150 seconds	6.5		Add-on	$1,205.00
GMB24-SR-T N4H*	2-10 VDC (4-20mA)**	2-10 VDC	24 VAC/DC	150 seconds	6.5	•	Add-on	$1,563.00
CUSTOMIZE PRODUCTS								
NMX24-MFT-T N4	Various	Various	24 VAC/DC	150 seconds	6		Add-on	$680.00
NMX24-MFT-T N4H*	Various	Various	24 VAC/DC	150 seconds	21	•	Add-on	$1,038.00
NMX24-MFT N4	Various	Various	24 VAC/DC	150 seconds	6		Add-on	$706.00
NMX24-MFT N4H*	Various	Various	24 VAC/DC	150 seconds	21	•	Add-on	$1,064.00
AMX24-MFT-T N4	Various	Various	24 VAC/DC	150 seconds	6		Add-on	$805.00
AMX24-MFT-T N4H*	Various	Various	24 VAC/DC	150 seconds	21	•	Add-on	$1,163.00
AMX24-MFT N4	Various	Various	24 VAC/DC	150 seconds	6		Add-on	$831.00
AMX24-MFT N4H*	Various	Various	24 VAC/DC	150 seconds	21	•	Add-on	$1,189.00
GMX24-MFT-T N4	Various	Various	24 VAC/DC	150 seconds	7		Add-on	$1,273.00
GMX24-MFT-T N4H*	Various	Various	24 VAC/DC	150 seconds	7	•	Add-on	$1,631.00
GMX24-MFT N4	Various	Various	24 VAC/DC	150 seconds	7		Add-on	$1,299.00
GMX24-MFT N4H*	Various	Various	24 VAC/DC	150 seconds	7	•	Add-on	$1,657.00

♦ Variable with MFT.
* Heater option.
** With 500 Ω resistor (ZG-R01).
NOTE: PWM programming not possible on MFT-T models.
For additional MFT programming codes, refer to MFT technical documentation or visit www.belimo.us.

067001 - 04/13 - Subject to change. © Belimo Aircontrols (USA), Inc.

Jackshaft for Non-Spring Return Series Damper Actuators

BELIMO

Actuator Specifications

Torque	
AMX	166 in-lbs [18Nm] minimum
NMX	87 in-lbs [9Nm] minimum
Angle of rotation	95°, adjustable with mechanical end stops MFT electronically variable 0-100%
JSL clamp size	½" to 1.05" (centers on ½"and ¾" shafts with insert and 1.05" without inserts)
Position indication	reflective visual indicator (snap-on)
Manual override	external push-button
Direction of rotation	external switch
Dimensions	
ZG-JSL	11.90" x 4.65" x 4.46" [303.5 x 118 x 113.4 mm]
Electrical connection	3 ft., 18 GA plenum cable, ½" conduit fitting
Overload protection	electronic throughout rotation
Auxiliary switch(es)	add-on: 1 or 2 SPDT, 3A (0.5A inductive) @ 250V adjustable 5° to 85°
Housing	NEMA 2/IP54, enclosure Type 2
Agency listings	cULus according to UL 60730-1A/-2-14, CAN/CSA E60730-1:02, CE according to 2004/108/EC and 2006/95/EC



ZG-JSL



ZG-JSLA + AMX24-SR

MFT

MFT= 2-10 VDC Default, or Set, Modify, Read:

- **Control (VDC range, Floating Point)**
- **Feedback (2-10 VDC, Variable)**
- **Motion (run time)**

All actuators have BDCM

LISTED 94 D5 TEMP. IND. & REG. EQUIP.

5 YEAR WARRANTY

NON-SPRING RETURN

Models		Non-Spring Return Damper Actuators Control Input	Feedback	Power Supply	Running Time(s) [Default]	VA Rating	Auxiliary Switch	List Price (Linkage Only)	ZG-JSLA List Price* (Actuator + Linkage)
BASIC PRODUCTS									
Jackshaft (only)	ZG-JSL							$250.00	
CUSTOMIZE PRODUCTS	**REORDER #**								
ZG-JSLA + AMX24-3	JSL+AM000 7C1 002	On/Off, Floating Point	Add-on	24 VAC/DC	95 seconds	5.5	Add-on		$527.00
ZG-JSLA + AMX24-SR	JSL+AM030 7C1 002	2-10 VDC (4-20mA*)	2-10 VDC	24 VAC/DC	95 seconds	5.5	Add-on		$675.00
ZG-JSLA + AMX24-MFT	JSL+AM100 7C1 A01	Various	Various	24 VAC/DC	95 seconds	6	Add-on		$715.00
ZG-JSLA + NMX24-3	JSL+NM000 7C1 002	On/Off, Floating Point	Add-on	24 VAC/DC	95 seconds	4	Add-on		$433.00
ZG-JSLA + NMX24-SR	JSL+NM030 7C1 002	2-10 VDC (4-20mA*)	2-10 VDC	24 VAC/DC	95 seconds	5	Add-on		$527.00
ZG-JSLA + NMX24-MFT	JSL+NM100 7C1 A01	Various	Various	24 VAC/DC	95 seconds	6	Add-on		$614.00

*At the factory, there is a $50.00 savings on the Jackshaft (ZG-JSL) if assembled with the actuator.
Example: ZG-JSL ($250.00) + NMX24-3 ($233.00) = Total List Price ($483.00) - Factory Installed Savings ($50.00).
Total List Price of Assembled at Factory ZG-JSLA + NMX24-3 is $433.00.

067001 - 04/13 - Subject to change. © Belimo Aircontrols (USA), Inc.

Actuator Specifications

Torque	18 in-lbs [2 Nm] minimum
Angle of rotation	without end stops limitless 315° with one end stop L = clockwise rotation, R = counter clockwise rotation
Fits shaft diameter	¼" to ½" (self-centers on 3/8" shaft)
Position indication	reflective visual indicator (snap-on) with magnet
Manual override	engages with magnet. magnet built-in to position indicator
Dimensions	6.22" x 2.2" x 1.10" [158 x 56 x 28 mm]
Electrical connection	3 ft., 18 GA plenum rated cable terminal strip (-T) models
Overload protection	electronic throughout rotation
Auxiliary switch	N/A
Housing	NEMA 2/IP54 (NEMA 1/IP20 for -T models), enclosure Type 2
Agency listings	cULus according to UL 60730-1A/-2-14, CAN/CSA E60730-1:02, CE according to 2004/108/EC and 2006/95/EC



CMB24-3-T

All actuators have BDCM

5 YEAR WARRANTY

NON-SPRING RETURN

Models	Control Input	Feedback	Power Supply	Running Time(s)	VA Rating	List Price
Non-Spring Return Damper Actuators						
BASIC PRODUCTS						
CMB24-3	On/Off, Floating Point	N/A	24 VAC/DC	35 seconds	1.5	$172.00
CMB24-3-T	On/Off, Floating Point	N/A	24 VAC/DC	35 seconds	1.5	$152.00
CMB120-3	On/Off, Floating Point	N/A	100-230 VAC	35 seconds	3.5	$248.00
CMB24-SR-R*	2-10 VDC (4-20 mA)***	2-10 VDC	24 VAC/DC	35 seconds	2.5	$279.00
CMB24-SR-L**	2-10 VDC (4-20 mA)***	2-10 VDC	24 VAC/DC	35 seconds	2.5	$279.00

* Clockwise rotation.
** Counterclockwise rotation.
*** With 500 Ω resistor (ZG-R01).

BULK PACKAGING							
CMB24-3.1	UNITS PER CARTON	20	On/Off, Floating Point	N/A	24 VAC/DC	35 seconds	1.5	$166.00 each
CMB24-3-T.1	UNITS PER CARTON	20	On/Off, Floating Point	N/A	24 VAC/DC	35 seconds	1.5	$124.00 each

Bulk pack models have a universal clamp, terminal block or cable and two end stops.
The anti-rotational bracket (Z-ARCM) and position indicator (Z-PICM) are included.

067001 - 04/13 - Subject to change. © Belimo Aircontrols (USA), Inc.

Actuator Specifications

Linear force	101 lbf [450 N force] minimum
Manual override	external push button
Direction of stroke ♦	external switch
Dimensions	9.0" x 3.2" x 3.0" [228 x 80.5 x 77 mm]
Electrical connection	3 ft., 18 GA plenum cable, ½" conduit fitting
Overload protection	electronic throughout full stroke
Housing	NEMA 2/IP54, enclosure Type 2
Agency listings	cULus according to UL 60730-1A/-2-14, CAN/CSA E60730-1:02, CE according to 2004/108/EC and 2006/95/EC

Auxiliary switch(es) not available.



AHB24-3-100

MFT

MFT= 2-10 VDC Default, or Set, Modify, Read:

- **Control – AH (PWM, VDC range, Floating Point)**
- **Feedback (0-10 VDC, 0-5 VDC, 2-10 VDC, Variable)**
- **Motion (run time)**

All actuators have BDCM

LISTED 94 D5 TEMP. IND. & REG. EQUIP.

5 YEAR WARRANTY

NON-SPRING RETURN

Models	Linear Stroke	Control Input	Feedback	Power Supply	Running Time(s)	VA Rating	List Price
Non-Spring Return Damper Actuators							
BASIC PRODUCTS							
AHB24-3-100	4" [100 mm]	On/Off, Floating Point	—	24 VAC/DC	150 seconds per 4"	4.5	$383.00
AHB24-3-200	8" [200 mm]	On/Off, Floating Point	—	24 VAC/DC	150 seconds per 4"	4.5	$408.00
AHB24-SR-100	4" [100 mm]	2-10 VDC (4-20 mA*)	2-10 VDC	24 VAC/DC	150 seconds per 4"	4.5	$529.00
AHB24-SR-200	8" [200 mm]	2-10 VDC (4-20 mA*)	2-10 VDC	24 VAC/DC	150 seconds per 4"	4.5	$552.00

♦ Variable with MFT.
* With 500 Ω resistor (ZG-R01).

067001 - 04/13 - Subject to change. © Belimo Aircontrols (USA), Inc.



AHB24-3-100

B = Basic stocked product

- Standard 150 second run time.
- Standard 3' plenum cable with conduit connector.

Typical Lead Time: 1 day

AHX24-3-100

X = Customizable product

- Choice of 10' or 16' cable with conduit connector.
- Option of 3' right angle cables for tight spaces (-3 version only).
- Factory programming for run time, control signal and feedback.

Typical Lead Time: 3 days or less

Reorder number consists of options which differ from standard product. This number is printed on the actuator for easy re-ordering.
For example:

Reorder # for a AHX24-MFT-100 is: AH1001C3A01

4 No Charge
3 $28.00
2 No Charge
1 $545.00
$573.00 Final Price

1 ACTUATOR TYPE

TYPE	Power	Control Input	Feedback	Code 1	List Price
AHX24-3-100	24V	On/Off, Floating Point	-	AH000	$383.00
AHX24-3-200	24V	On/Off, Floating Point	-	AH010	$408.00
AHX24-3-300	24V	On/Off, Floating Point	-	AH170	$424.00
AHX120-3-100	120V	On/Off, Floating Point	-	AH060	$412.00
AHX120-3-200	120V	On/Off, Floating Point	-	AH070	$435.00
AHX120-3-300	120V	On/Off, Floating Point	-	AH180	$489.00
AHX24-SR-100	24V	2-10 VDC	2-10 VDC	AH030	$529.00
AHX24-SR-200	24V	2-10 VDC	2-10 VDC	AH040	$552.00
AHX120-SR-100	24V	2-10 VDC	2-10 VDC	AH450	$518.00
AHX120-SR-200	24V	2-10 VDC	2-10 VDC	AH460	$541.00
AHX24-MFT-100	24V	Various	Various	AH100	$545.00
AHX24-MFT-200	24V	Various	Various	AH280	$582.00
AHX24-MFT-300	24V	Various	Various	AH790	$595.00

2 CLAMP

TYPE	Size	Code 2	List Price
Standard Universal Clamp	N/A	0	No Charge

3 CABLES

CABLE (with conduit fitting)	Size	Code 3	List Price
24V Plenum Rated	3 ft.	C1	No Charge
	10 ft.	C3	$28.00
	16 ft.	C5	$48.00
120V Appliance Rated	3 ft.	A1	No Charge
	10 ft.	A3	$28.00
	16 ft.	A5	$48.00

4 PROGRAM

	Running Time	Control Input	Feedback	Code 4	List Price
-3	150 seconds	On/Off, Floating Point	-	000	No Charge
-SR	150 seconds	2-10 VDC	2-10 VDC	000	No Charge
-MFT	150 seconds	2-10 VDC	2-10 VDC	A01	No Charge
	150 seconds	0.5-10 VDC	0.5-10 VDC	A02	No Charge
	150 seconds	8-20 VDC	2-10 VDC	AAL	No Charge
	150 seconds	Floating Point	2-10 VDC	F01	No Charge
	150 seconds	On/Off	0-10 VDC	J02	No Charge
	150 seconds	PWM (0.02-5 sec)	2-10 VDC	W02	No Charge

Multi-Function Technology offers a wide variety of programmable control inputs and feedback signals. Parameters can be set for voltage control (VDC), time proportional control (PWM), floating point, on/off and feedback signal. Parameters can be changed on-site to optimize/enable application. You can also set, modify or read position, running time, mechanical working range, address, status, and diagnostics.

For additional MFT programming codes, refer to MFT technical documentation or visit www.belimo.us.

067001 - 04/13 - Subject to change. © Belimo Aircontrols (USA), Inc.

Actuator Specifications

Linear force	34 lbf [150 N force] minimum
Power supply	24 VAC/DC
Manual override	external push-button
Direction of stroke♦	external switch
Dimensions	8" x 2.64" x 2.6" [203 x 67 x 66 mm] 5.63" x 2.6 x 3.15" [143 x 67 x 80 mm]
Electrical connection	3 ft., 18 GA plenum cable, ½" conduit fitting
Overload protection	electronic throughout full stroke
Housing	NEMA 2/IP54 (NEMA1/IP20 for -T models), enclosure Type 2
Agency listings	cULus according to UL 60730-1A/-2-14, CAN/CSA E60730-1:02, CE according to 2004/108/EC and 2006/95/EC

Auxiliary switch not available.



LHB24-3-100

MFT

MFT= 2-10 VDC Default, or Set, Modify, Read:

- **Control – LH (PWM, VDC range, Floating Point)**
- **Feedback (0-10 VDC, 0-5 VDC, 2-10 VDC, Variable)**
- **Motion (run time)**

All actuators have BDCM

LISTED 94 D5 TEMP. IND. & REG. EQUIP.

5 YEAR WARRANTY

NON-SPRING RETURN

Models	Linear Stroke	Control Input	Feedback	Power Supply	Running Time(s)	VA Rating	List Price
Non-Spring Return Damper Actuators							
BASIC PRODUCTS							
LHB24-3-100	4" [100 mm]	On/Off, Floating Point	—	24 VAC/DC	150 seconds per 4"	3	$238.00
LHB24-3-200	8" [200 mm]	On/Off, Floating Point	—	24 VAC/DC	150 seconds per 4"	3	$261.00
LHB24-SR-100	4" [100 mm]	2-10 VDC (4-20 mA*)	2-10 VDC	24 VAC/DC	150 seconds per 4"	3	$342.00
LHB24-SR-200	8" [200 mm]	2-10 VDC (4-20 mA*)	2-10 VDC	24 VAC/DC	150 seconds per 4"	3	$367.00

♦ Variable with MFT.
* With 500 Ω resistor (ZG-R01).

067001 - 04/13 - Subject to change. © Belimo Aircontrols (USA), Inc.



LHB...

B = Basic stocked product

- Standard 150 second run time.
- Standard 3' plenum cable with conduit connector.

Typical Lead Time: 1 day

LHX...

X = Customizable product

- Choice of 10' or 16' cable with conduit connector.
- Option of 3' right angle cables for tight spaces (-3 version only).
- Factory programming for run time, control signal and feedback.

Typical Lead Time: 3 days or less

Reorder number consists of options which differ from standard product. This number is printed on the actuator for easy re-ordering.
For example:

Reorder # for a LHX24-MFT-100 is: LH1001C3A01

4 No Charge
3 $28.00
2 No Charge
1 $379.00
$407.00 Final Price

1 ACTUATOR TYPE

TYPE	Power	Control Input	Feedback	Code 1	List Price
LHX24-3-100	24V	On/Off, Floating Point	-	LH000	$238.00
LHX24-3-200	24V	On/Off, Floating Point	-	LH010	$261.00
LHX24-3-300	24V	On/Off, Floating Point	-	LH170	$273.00
LHX120-3-100	120V	On/Off, Floating Point	-	LH060	$265.00
LHX120-3-200	120V	On/Off, Floating Point	-	LH070	$287.00
LHX120-3-300	120V	On/Off, Floating Point	-	LH180	$309.00
LHX24-SR-100	24V	2-10 VDC	2-10 VDC	LH030	$342.00
LHX24-SR-200	24V	2-10 VDC	2-10 VDC	LH040	$367.00
LHX120-SR-100	24V	2-10 VDC	2-10 VDC	LH450	$379.00
LHX120-SR-200	24V	2-10 VDC	2-10 VDC	LH460	$404.00
LHX24-MFT-100	24V	Various	Various	LH100	$379.00
LHX24-MFT-200	24V	Various	Various	LH280	$404.00
LHX24-MFT-300	24V	Various	Various	LH790	$426.00

2 CLAMP

TYPE	Size	Code 2	List Price
Standard Universal Clamp	N/A	0	No Charge

3 CABLES

CABLE (with conduit fitting)	Size	Code 3	List Price
24V Plenum Rated	3 ft.	C1	No Charge
	10 ft.	C3	$28.00
	16 ft.	C5	$48.00
120V Appliance Rated	3 ft.	A1	No Charge
	10 ft.	A3	$28.00
	16 ft.	A5	$48.00

4 PROGRAM

	Running Time	Control Input	Feedback	Code 4	List Price
-3	150 seconds	On/Off, Floating Point	-	000	No Charge
	95 seconds	On/Off, Floating Point	-	002	No Charge
-SR	150 seconds	2-10 VDC	2-10 VDC	000	No Charge
	95 seconds	2-10 VDC	2-10 VDC	002	No Charge
-MFT	150 seconds	2-10 VDC	2-10 VDC	A01	No Charge
	150 seconds	0.5-10 VDC	0.5-10 VDC	A02	No Charge
	150 seconds	8-20 VDC	2-10 VDC	AAL	No Charge
	90 seconds	0-10 VDC	0-10 VDC	ACA	No Charge
	150 seconds	Floating Point	2-10 VDC	F01	No Charge
	150 seconds	On/Off	0-10 VDC	J02	No Charge
	150 seconds	PWM (0.02-5 sec)	2-10 VDC	W02	No Charge

Multi-Function Technology offers a wide variety of programmable control inputs and feedback signals. Parameters can be set for voltage control (VDC), time proportional control (PWM), floating point, on/off and feedback signal. Parameters can be changed on-site to optimize/enable application. You can also set, modify or read position, running time, mechanical working range, address, status, and diagnostics.

For additional MFT programming codes, refer to MFT technical documentation or visit www.belimo.us.

NON-SPRING RETURN

067001 - 04/13 - Subject to change. © Belimo Aircontrols (USA), Inc.

LU Rotary Series

Direct Coupled, Non-Spring Return Damper Actuators, 27 in-lbs Minimum Torque

Actuator Specifications

Torque	27 in-lbs [3 Nm] minimum
Angle of rotation♦	endless (-3 models), 330° (-SR models)
Fits shaft diameter	5/16" to 13/32" [8 to 10 mm] square
Manual override	external push-button
Direction of rotation♦	external switch
Dimensions	6.2" x 3.1" x 2.4" [158 x 80 x 62 mm]
Electrical connection	3 ft., 18 GA plenum rated cable, 1/2" conduit fitting
Overload protection	electronic throughout rotation
Housing	NEMA 2/IP54, enclosure Type 2
Agency listings	cULus according to UL 60730-1A/-2-14, CAN/CSA E60730-1:02, CE according to 2004/108/EC and 2006/95/EC

Auxiliary switch not available.



LUB24-3

MFT

MFT= 2-10 VDC Default, or Set, Modify, Read:

- **Control (PWM, VDC range, Floating Point)**
- **Feedback (0-10 VDC, 0-5 VDC, 2-10 VDC, Variable)**
- **Motion (run time)**

All actuators have BDCM

LISTED 94 D5 TEMP. IND. & REG. EQUIP.

5 YEAR WARRANTY

NON-SPRING RETURN

Non-Spring Return Damper Actuators

Models	Control Input	Feedback	Power Supply	Running Time(s)	VA Rating	List Price
BASIC PRODUCTS						
LUB24-3	On/Off, Floating Point	—	24 VAC/DC	150 seconds per 90°	2.5	$251.00
LUB24-SR	2-10 VDC (4-20 mA*)	2-10 VDC	24 VAC/DC	150 seconds per 90°	3	$344.00

♦ Variable with MFT.
* With 500 Ω resistor (ZG-R01).

067001 - 04/13 - Subject to change. © Belimo Aircontrols (USA), Inc.



LUB...

B = Basic stocked product

- Standard 95 second run time.
- Standard 8x8 mm form fit.
- Standard 3' plenum cable with conduit connector.

Typical Lead Time: 1 day

LUX...

X = Customizable product

- Choice of 10' or 16' cable with conduit connector.
- Option of 3' right angle cables for tight spaces (-3 version only).
- Form fit available in 12x12 mm, 10x10 mm or 8x8 mm.
- Factory programming for run time, control signal and feedback.

Typical Lead Time: 3 days or less

Reorder number consists of options which differ from standard product. This number is printed on the actuator for easy re-ordering.
For example:

Reorder # for a LUX24-MFT is: LU1001C3A01

4 No Charge
3 $28.00
2 No Charge
1 $396.00
$424.00 Final Price

1 ACTUATOR TYPE

TYPE	Power	Control Input	Feedback	Code 1	Price List
LUX24-3	24V	On/Off, Floating Point	-	LU010	$251.00
LUX120-3	120V	On/Off, Floating Point	-	LU070	$276.00
LUX24-SR	24V	2-10 VDC	2-10 VDC	LU040	$344.00
LUX120-SR	120V	2-10 VDC	2-10 VDC	LU460	$383.00
LUX24-MFT	24V	(see MFT label)	Various	LU100	$396.00

2 CLAMP

TYPE	Size	Code 2	Price List
Standard Universal Clamp	8 mm to 12 mm	8	No Charge
	8 mm to 12 mm with end stop	9	No Charge
	Formfit 8 mm X 8 mm	A	No Charge
	Formfit 10 mm X 10 mm	B	No Charge
	Formfit 12 mm X 12 mm	C	No Charge

3 CABLES

CABLE (with conduit fitting)	Size	Code 3	Price List
24V Plenum Rated	3 ft.	C1	No Charge
	10 ft.	C3	$28.00
	16 ft.	C5	$48.00
120V Appliance Rated	3 ft.	A1	No Charge
	10 ft.	A3	$28.00
	16 ft.	A5	$48.00

4 PROGRAM

	Running Time	Control Input	Feedback	Code 4	Price List
-3	150 seconds	On/Off, Floating Point	-	004	No Charge
-SR	150 seconds	2-10 VDC	2-10 VDC	000	No Charge
	95 seconds	2-10 VDC	2-10 VDC	002	No Charge
-MFT	150 seconds	0.5-10 VDC	2-10 VDC	A42	No Charge
	150 seconds	2-10 VDC	2-10 VDC	AC5	No Charge
	150 seconds	6-9 VDC	2-10 VDC	A56	No Charge
	150 seconds	Floating Point	2-10 VDC	F08	No Charge
	150 seconds	On/Off	2-10 VDC	J01	No Charge

Multi-Function Technology offers a wide variety of programmable control inputs and feedback signals. Parameters can be set for voltage control (VDC), time proportional control (PWM), floating point, on/off and feedback signal. Parameters can be changed on-site to optimize/enable application. You can also set, modify or read position, running time, mechanical working range, address, status, and diagnostics.

For additional MFT programming codes, refer to MFT technical documentation or visit www.belimo.us.

NON-SPRING RETURN

067001 - 04/13 - Subject to change. © Belimo Aircontrols (USA), Inc.

5 DAMPER ACTUATOR ACCESSORIES

- Universal mounting brackets are designed for applications where the actuator cannot be mounted directly to the shaft.
- Crankarm adaptor kits allow for easy retrofit applications.
- Battery back-up drives a non fail-safe actuator a safety position during power failure.

Applications

Belimo has a wide range of electrical and mechanical accessories that can help solve any application problem. With unparalleled customer service and technical support our accessories are designed to enhance performance and add value.



Get up and running in record time.





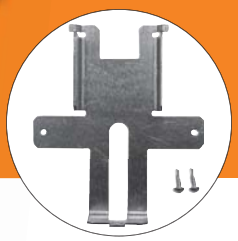

The ZG-JSL can be used with the EF actuator series by attaching the ZG-121 support plate. (NEMA 4 models excluded.)

The quickest install designed with ease in mind.

The ZG-JSL linkage is designed to simplify the attachment of select Belimo actuators to a damper's jackshaft. The unique open ended design allows the linkage to clamp on to any part of a jackshaft measuring from 1/2" to 1.05" in diameter.

Saves time and cost

The ZG-JSL linkage simplifies typical installations and eliminates the difficulties where jackshaft bearings are hard to access. Belimo has simplified installing actuators onto jackshafts, reducing installation time translating into a cost savings. Now with the ZG-JSL linkage, jackshaft installations are done in minutes!

Ideal for tight spaces

The ZG-JSL linkage has a built-in shaft which allows the direct coupling of Belimo actuators. The anti-rotation plate enables the installed actuator to be rotated 90 degrees for space saving applications.

PROGRAMMING TOOLS		EFB EFX	AFB AFX	NFB NFX	LF	TFB TFX	GKB GKX	NKQB NKQX	GMB GMX	AMB AMX	NMB NMX	LMB LMX	AHB AHX	LHB LHX	LUB LUX	SY	List Price
	**MFT-P** Belimo MFT configuration software (V3.X). Includes: PC-Tool software (hardware not included)	●	●	●	●	●	●	●	●	●	●	●	●	●	●	●	$158.00
INTERFACES, CABLES																	
	**ZIP-USB-MP US** PC-Interface: Compact unit for use with USB port and "ZK" style cable adapter (ZK cable below purchased separately).	●	●	●	●	●	●	●	●	●	●	●	●	●	●	●	$582.00
	**ZIP-RS232 US** Terminal block connects to PC with RS232 connection. Includes MFT-XFMR, F/M communication cable and F/F gender changer.	●	●	●	●	●	●	●	●	●	●	●	●	●	●		$667.00
	**ZK1-GEN** Cable for use with ZTH-GEN or ZIP-USB-MP US to connect to actuator via diagnostic/ programming socket.	●					●	●	●	●	●	●	●	●	●		$102.00
	**ZK2-GEN** Cable for use with ZTH-GEN or ZIP-USB-MP US to connect to actuators not equipped with diagnostic/ programming socket.	●	●	●	●	●	●	●	●	●	●	●	●	●	●		$47.00
	**ZK3-GEN** Cable to connect ZTH-GEN or ZIP-RS232 US to actuator via diagnostic/ programming socket.	●					●	●	●	●	●	●	●	●	●		$167.00
	**ZKS-MP** Cable to connect ZIP-RS232 US and ZIP-USB-MP US to any Belimo gateway.	●	●	●	●	●	●	●	●	●	●	●	●	●	●		$102.00
	**ZK6-GEN** Cable for use with ZTH-GEN or ZIP-USB-MP US to connect to SY actuator via RJII port.															●	$49.00
	**UK24LON** LON gateway that can connect up to 8 MFT actuators.	*Available for all MFT Actuators*															$859.00
	**UK24BAC** BACnet gateway that can connect up to 8 MFT actuators.	*Available for all MFT Actuators*															$859.00
	**UK24MOD** Modbus gateway that can connect up to 8 MFT actuators.	*Available for all MFT Actuators*															$859.00

067001 - 04/13 - Subject to change. © Belimo Aircontrols (USA), Inc.

Mechanical Damper Actuator Accessories

BELIMO

5 YEAR WARRANTY

INTERFACES, CABLES	EFB EFX	AFB AFX	NFB NFX	LF	TFB TFX	GKB GKX	NKQB NKQX	GMB GMX	AMB AMX	NMB NMX	LMB LMX	AHB AHX	LHB LHX	LUB LUX	SY	List Price
 **ZTH-GEN US Plus** Handheld programming tool with ZK1-GEN, ZK2-GEN, and ZK6-GEN.	*Available for all MFT Actuators*															$667.00

CLAMPS	EFB EFX	AFB AFX	NFB NFX	LF	TFB TFX	GKB GKX	NKQB NKQX	GMB GMX	AMB AMX	NMB NMX	LMB LMX	AHB AHX	LHB LHX	LUB LUX	List Price
 **K9-2** Standard EFB clamp (½" to 1.05")	●														$46.00
 **K7-2** Standard AFB/NFB clamp (½" to 1.05")		●	●												$27.00
K6 US Standard LF clamp (3/8" to ½")				●											$19.00
 **K6-1** Jackshaft clamp (½" to ¾")				●											$16.00
K8 US Standard TF clamp (¼" to ½")					●										$16.00
 **K-GM20** Reversible clamp (½" to 1.05")						●		●							$33.00
K-AM25 Standard clamp (½" to 1.05")							●		●	●					$21.00
 **K-SA** Reversible clamp (½" to ¾")							●		●						$27.00
K-NA Reversible clamp (½" to ¾")										●					$27.00
 **K-LM20** Clamp (¾")											●				$14.00
 **K-LM16** Clamp (5/8")											●				$14.00
K-LM12 Clamp (1/2")											●				$14.00
 **K-LM10** Clamp (3/8")											●				$14.00
 **K-LU** Spindle clamp (5/16" to ½")														●	$29.00

DAMPER ACCESSORIES

067001 - 04/13 - Subject to change. © Belimo Aircontrols (USA), Inc.

POSITION INDICATORS / ROTATION LIMITERS		EFB EFX	AFB AFX	NFB NFX	LF	TFB TFX	GKB GKX	NKQB NKQX	GMB GMX	AMB AMX	NMB NMX	LMB LMX	AHB AHX	LHB LHX	LUB LUX	List Price
	**IND-EFB** Position indicator	●														$15.00
	**IND-AFB** Position indicator		●	●												$10.00
	**IND-LF** Position indicator				●											$10.00
	IND-TF Position indicator					●										$10.00
	ZDB-LF Angle of rotation limiter for LF				●											$10.00
	**ZDB-TF** Angle of rotation limiter for TF					●										$10.00
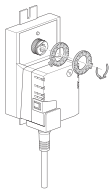	**ZDB-LU** Angle of rotation limiter for LU														●	$13.00

MOUNTING BRACKETS		EFB EFX	AFB AFX	NFB NFX	LF	TFB TFX	GKB GKX	NKQB NKQX	GMB GMX	AMB AMX	NMB NMX	LMB LMX	AHB AHX	LHB LHX	LUB LUX	List Price
	**ZG-120** Jackshaft mounting bracket	●	●	●			●	●	●	●	●					$80.00
	**ZG-118*** Channel (5 7/8" H x 5 1/2" W x 2 19/32" base)		●	●												$56.00
	**ZG-100** Right angle (17" H x 11 1/8" W x 6" base)	●	●	●			●	●	●	●						$82.00
	ZG-101 Right angle (13" H x 11" W x 7 7/16" base)	●	●	●			●	●	●	●						$82.00
	**ZG-102** Multiple actuator mounting bracket		●				●		●							$80.00
	**ZG-103** Right angle (7 1/2" H x 11" W x 2 ¾" base)						●	●	●	●	●					$61.00

* Positions crank arm in same relative position as crank arm on electric foot mount-type linkage actuators.

067001 - 04/13 - Subject to change. © Belimo Aircontrols (USA), Inc.

Mechanical Damper Actuator Accessories

MOUNTING BRACKETS		EFB EFX	AFB AFX	NFB NFX	LF	TFB TFX	GKB GKX	NKQB NKQX	GMB GMX	AMB AMX	NMB NMX	LMB LMX	AHB AHX	LHB LHX	LUB LUX	List Price
	**ZG-104** Right angle (13 5/8" H x 7 1/2" W x 4" base)						●	●	●	●	●					$61.00
	**ZG-112*** Right angle (4½" H x 5½" W x 2½" base)				●											$33.00
	ZG-113* Right angle (4½" H x 5 ½" W x 2½" base)					●										$33.00
	**20477-00001** Honeywell logic module bracket				●											$54.00
	**Z-AF** AF/NF to AFB, AFX/NFB, NFX retrofit mounting bracket		●	●												$19.00
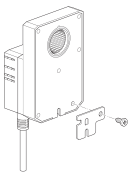	**Z-NMA** NM to NMB, NMX retrofit mounting bracket (supplied with non-spring return actuators)										●					$16.00
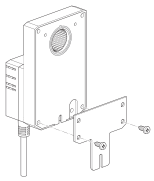	**Z-SMA** AM, SM to AMB, AMX retrofit mounting bracket (supplied with non-spring return actuators)									●						$16.00
	Z-GMA GM to GMB, GMX retrofit mounting bracket (supplied with non-spring return actuators)								●							$16.00

* Positions crank arm in same relative position as crank arm on electric foot mount-type linkage actuators.

067001 - 04/13 - Subject to change. © Belimo Aircontrols (USA), Inc.

CRANK ARM ADAPTOR KITS		EFB EFX	AFB AFX	NFB NFX	LF	TFB TFX	GKB GKX	NKQB NKQX	GMB GMX	AMB AMX	NMB NMX	LMB LMX	AHB AHX	LHB LHX	LUB LUX	List Price
	**KH-EFB** Crank arm	●														$42.00
	**KH-AFB** Crank arm for shafts to ¾"		●	●												$27.00
	**KH-LF** Crank arm for shafts to ½"				●											$25.00
	KH-LFV V-bolt kit for direct coupling with KH-LF				●											$10.00
	**KH-TF US** Crank arm with 5/16" slot					●										$29.00
	KH-TF-1 US Crank arm with ¼" slot					●										$29.00
	**AH-GMA** GMB, GMX crank arm						●		●							$35.00
	AH-25 NMB, NMX and AMB, AMX crank arm							●		●	●					$29.00
	**ZG-EFB** Crank arm adaptor kit	●														$103.00
	**ZG-AFB** Crank arm adaptor kit		●	●												$85.00
	**ZG-AFB118** Crank arm adaptor kit		●	●												$82.00
	**ZG-LF112** Crank arm adaptor kit (includes ZG-112 & KH-LF)				●											$54.00
	**ZG-LF2** Crank arm adaptor kit (includes mounting hardware)				●											$63.00
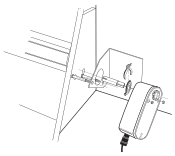	**ZG-LFC114** Trane Voyager retrofit kit (includes retrofit bracket)				●											$101.00

DAMPER ACCESSORIES

067001 - 04/13 - Subject to change. © Belimo Aircontrols (USA), Inc.

Mechanical Damper Actuator Accessories

BELIMO

5 YEAR WARRANTY

CRANK ARM ADAPTOR KITS		EFB EFX	AFB AFX	NFB NFX	LF	TFB TFX	GKB GKX	NKQB NKQX	GMB GMX	AMB AMX	NMB NMX	LMB LMX	AHB AHX	LHB LHX	LUB LUX	List Price
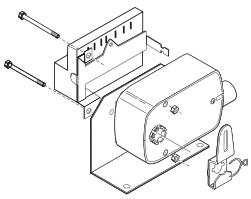	**ZG-ECON1** Honeywell economizer retrofit kit (includes 20477-00001 retrofit bracket)				●											$90.00
	ZG-ECON2 Honeywell economizer retrofit kit (logic module bracket not included)				●											$72.00
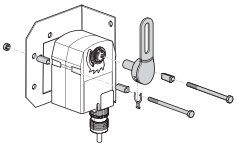	**ZG-TF112** Crank arm adaptor kit (includes ZG-113 and KH-TF-1)					●										$56.00
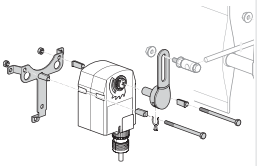	**ZG-TF2** Crank arm adaptor kit (includes mounting hardware)					●										$47.00
	ZG-GMA Crank arm adaptor kit						●		●							$90.00
	**ZG-NMA** Crank arm adaptor kit							●		●	●					$61.00

LINKAGES		EFB EFX	AFB AFX	NFB NFX	LF	TFB TFX	GKB GKX	NKQB NKQX	GMB GMX	AMB AMX	NMB NMX	LMB LMX	AHB AHX	LHB LHX	LUB LUX	List Price
	**ZG-JSL** Jackshaft linkage Note: LF requires K6-1 clamp Note: EFB, EFX requires ZG-121	●	●	●	●		●	●	●	●	●					$250.00
	**ZG-121** Support plate for ZG-JSL with EF actuator	●														$55.00

DAMPER ACCESSORIES

067001 - 04/13 - Subject to change. © Belimo Aircontrols (USA), Inc.

	BALL JOINTS, DAMPER CLIPS, PUSH RODS	EFB EFX	AFB AFX	NFB NFX	LF	TFB TFX	GKB GKX	NKQB NKQX	GMB GMX	AMB AMX	NMB NMX	LMB LMX	AHB AHX	LHB LHX	LUB LUX	List Price
	**KH6**** Universal crank arm for KG6 ball joint. Slot width 1/4" (6.2mm). For damper shafts: 3/8" to 11/16" dia. (10 to 18mm) or 3/8" to 9/16" sq. (10 to 14mm).			●	●	●		●			●					$19.00
	KH8** Universal crank arm for KG8 or KG10A ball joint. Slot width 21/64" (8.2mm). For damper shafts: 3/8" to 11/16" dia. (10 to 18mm) or 3/8" to 9/16" sq. (10 to 14mm).		●	●	●	●		●		●	●					$19.00
	**KH10** Universal crank arm. Slot width 21/64" (8.2mm). For damper shafts 9/16" to 1" dia. (14 to 25 mm).	●	●	●			●		●							$47.00
	**KH12** Universal crank arm. Slot width 21/64" (8.2mm). For damper shafts 3/4" to 1" dia. (20 to 25 mm).		●	●	●	●		●		●	●					$26.00
	**KG6** Ball joint ($^{5}/_{16}$" dia. rod) zinc plated			●	●	●					●		●	●		$16.00
	**KG8** Ball joint ($^{5}/_{16}$" dia. rod, 90°) galvanized steel		●	●	●	●		●	●	●	●		●	●		$21.00
	**KG10A** Ball joint for KH8 ($^{3}/_{8}$" dia. rod) zinc plated	●	●	●	●	●	●		●	●	●		●	●		$23.00
	SH8 Push rod for KG6 & KG8 ball joints (36", $^{5}/_{16}$" dia.)		●	●	●	●		●	●	●	●		●	●		$25.00
	SH10 Push rod for KG10 ball joints (36", $^{3}/_{8}$" dia.)	●	●	●	●	●	●		●	●	●					$33.00
	**ZG-DC1** Damper clip for damper blade, 3.5" width	●	●	●	●	●	●	●	●	●	●					$39.00
	**ZG-DC2** Damper clip for damper blade, 6" width	●	●	●	●	●	●	●	●	●	●					$43.00

**Universal crank arms are not designed to be directly attached to an actuator's universal clamp. They also cannot be modified for the same installation. Universal crank arms are to be mounted to a control shaft only. Crank arm adaptor kits can be found on the respective actuator pages.

067001 - 04/13 - Subject to change. © Belimo Aircontrols (USA), Inc.

Mechanical Damper Actuator Accessories

BELIMO

5 YEAR WARRANTY

HOUSINGS		EFB EFX	AFB AFX	NFB NFX	LF	TFB TFX	GKB GKX	NKQB NKQX	GMB GMX	AMB AMX	NMB NMX	LMB LMX	AHB AHX	LHB LHX	LUB LUX	List Price
	**ZS-T** Terminal cover for NEMA 2 (-T models)									●	●	●				$21.00
	**ZS-100** Weather shield - galvaneal (13"L x 8"W x 6"D)		●	●	●	●	●	●	●	●	●	●			●	$149.00
	ZS-101 Base plate for ZS-100		●	●	●	●	●	●	●	●	●	●			●	$33.00
	**ZS-150** Weather shield - polycarbonate with foam seal (16"L x 8 3/8"W x 4"D)		●	●	●	●	●	●	●	●	●	●			●	$168.00
	**ZS-260** Explosion proof housing		●	●	●		●		●	●						$2,481.00
	ZG-109 Right angle bracket for ZS-260		●	●	●		●		●	●						$118.00
	ZG-110 Stand-off bracket for ZS-260		●	●	●		●		●	●						$141.00
	**ZS-300** NEMA 4X, 304 stainless steel enclosure		●	●	●		●		●	●						$2,046.00
	ZS-300-1 ZS-300 without brackets (17¼"L x 8¾"W x 5½"D)		●	●	●		●		●	●						$1,937.00
	ZS-300-5 NEMA 4X, 316L stainless steel enclosure		●	●	●		●		●	●						$2,476.00
	ZS-300-BK ZS-300 bracket kit		●	●	●		●		●	●						$207.00
	**ZS-300-C1** ½" Shaft adaptor (standard with ZS-300)		●	●	●		●		●	●						$312.00
	ZS-300-C2 ¾" Shaft adaptor		●	●	●		●		●	●						$313.00
	ZS-300-C3 1" Shaft adaptor		●	●	●		●		●	●						$454.00

DAMPER ACCESSORIES

067001 - 04/13 - Subject to change. © Belimo Aircontrols (USA), Inc.

SHAFT ADAPTORS		EFB EFX	AFB AFX	NFB NFX	LF	TFB TFX	GKB GKX	NKQB NKQX	GMB GMX	AMB AMX	NMB NMX	LMB LMX	AHB AHX	LHB LHX	LUB LUX	List Price
	**AV6-20** 6.7" Shaft extension fits ¼" to ¾" diameter shafts				●	●		●				●				$49.00
	AV8-25* 9.8" Shaft extension fits 5/16" to 1" diameter shafts	●	●	●	●		●	●	●	●	●					$58.00
	ZG-JSA-1 1" Jackshaft adaptor [11"]		●	●			●	●	●	●	●					$193.00
	**ZG-JSA-2** 1 5/16" Jackshaft adaptor [12"]		●	●			●	●	●	●	●					$422.00
	ZG-JSA-3 1.05" Jackshaft adaptor [12"]	●	●	●			●	●	●	●	●					$355.00
	ZG-NMSA-1 Shaft extension for ½" diameter shafts [3.8"]							●			●					$54.00
	**ZG-LMSA** Shaft extension for ½" diameter shafts [3"]											●				$61.00
	ZG-LMSA-1 Shaft extension for 3/8" diameter shafts [4"]				●							●				$61.00
	ZG-LMSA-½"-5 Shaft extension for ½" diameter shafts [5"]				●											$67.00

*K6-1 Accessory clamp is needed for use with LF actuators.

MISCELLANEOUS		EFB EFX	AFB AFX	NFB NFX	LF	TFB TFX	GKB GKX	NKQB NKQX	GMB GMX	AMB AMX	NMB NMX	LMB LMX	AHB AHX	LHB LHX	LUB LUX	List Price
	**TF-CC US** Conduit connector	●	●	●		●	●	●	●	●	●	●	●	●	●	$13.00
	EF-P Anti-rotation bracket	●					●		●							$8.00
	**AF-P** Anti-rotation bracket		●	●												$8.00
	**LF-P** Anti-rotation bracket				●											$8.00
	TF-P Anti-rotation bracket					●		●		●	●	●				$6.00
	**Z-DS1** Rotary support for lateral force compensation												●	●		$35.00
	Z-KSA 5/16" Shaft clevis													●		$45.00
	**Z-KSC** 3/8"- 16 Shaft clevis												●			$45.00
	**ZG-119** Bracket for linear actuators												●	●		$52.00
	Tool-06 8 mm and 10 mm wrench		●	●	●	●		●		●	●	●				No Charge
	Tool-07 13 mm wrench	●					●		●							No Charge

067001 - 04/13 - Subject to change. © Belimo Aircontrols (USA), Inc.

Electronic Damper Actuator Accessories

BELIMO

5 YEAR WARRANTY

AUXILIARY SWITCHES & POTENTIOMETERS		EFB EFX	AFB AFX	NFB NFX	LF	TFB TFX	GKB GKX	NKQB NKQX	GMB GMX	AMB AMX	NMB NMX	LMB LMX	AHB AHX	LHB LHX	LUB LUX	List Price
	S1A Auxiliary switch, 1x SPDT, 3A resistive (0.5A inductive) @ 250 VAC						●	●	●	●	●	●				$84.00
	**S2A** Auxiliary switch, 2x SPDT, 3A resistive (0.5A inductive) @ 250 VAC						●	●	●	●	●	●				$125.00
	**P370** Shaft mount auxiliary switch, ½" shaft	●	●	●	●	●	●	●	●	●	●	●	●	●	●	$178.00
	P140A GR Feedback potentiometer 140 Ω						●	●	●	●	●	●				$138.00
	P500A GR Feedback potentiometer 500 Ω						●	●	●	●	●	●				$138.00
	**P1000A GR** Feedback potentiometer 1000 Ω						●	●	●	●	●	●				$138.00
	P2800A GR Feedback potentiometer 2800 Ω						●	●	●	●	●	●				$138.00
	P5000A GR Feedback potentiometer 5000 Ω						●	●	●	●	●	●				$138.00
	P10000A GR Feedback potentiometer 10000 Ω						●	●	●	●	●	●				$138.00
	**Z-SPA** Adaptor for auxiliary switches and potentiometers						●	●								$15.00

CONTROL & POSITIONING		EFB EFX	AFB AFX	NFB NFX	LF	TFB TFX	GKB GKX	NKQB NKQX	GMB GMX	AMB AMX	NMB NMX	LMB LMX	AHB AHX	LHB LHX	LUB LUX	List Price
	SGA24 (surface mount) Positioner for remote control (proportional models)	●	●	●	●	●	●	●	●	●	●	●	●	●	●	$151.00
	**SGF24** (flush mount) Positioner for remote control (proportional models)	●	●	●	●	●	●	●	●	●	●	●	●	●	●	$129.00
	ZG-SGF Mounting plate for SGF	●	●	●	●	●	●	●	●	●	●	●	●	●	●	$23.00
	**IRM-100** Input rescaling module (proportional models)	●	●	●	●	●	●	●	●	●	●	●	●	●	●	$210.00
	**PTA-250** Pulse width modulation interface (proportional models)	●	●	●	●	●	●	●	●	●	●	●	●	●	●	$267.00
	ADS-100 Analog to digital switch (proportional models)	●	●	●	●	●	●	●	●	●	●	●	●	●	●	$224.00
	ZG-R01 4 to 20 mA adaptor, 500 Ω, ½" W resistor with 6" pigtail wires	●	●	●	●	●	●	●	●	●	●	●	●	●	●	$19.00
	ZG-R02 50% voltage divider	●	●	●	●	●	●	●	●	●	●	●	●	●	●	$29.00

DAMPER ACCESSORIES

067001 - 04/13 - Subject to change. © Belimo Aircontrols (USA), Inc.

CONTROL & POSITIONING		EFB EFX	AFB AFX	NFB NFX	LF	TFB TFX	GKB GKX	NKQB NKQX	GMB GMX	AMB AMX	NMB NMX	LMB LMX	AHB AHX	LHB LHX	LUB LUX	List Price
	ZG-R03 Resistor kit for …MFT95 actuators in a 0 to 135 Ω control application		●						●	●	●	●				$19.00
	ZG-R05 Resistor kit for …MFT95 actuators in a 4 to 20 mA control application		●						●	●	●	●				$19.00
	ZG-R06 Resistor kit for …MFT95 actuators in a series 90 control application		●						●	●	●	●				$19.00

MISCELLANEOUS		EFB EFX	AFB AFX	NFB NFX	LF	TFB TFX	GKB GKX	NKQB NKQX	GMB GMX	AMB AMX	NMB NMX	LMB LMX	AHB AHX	LHB LHX	LUB LUX	List Price
	**PS-100** Actuator power supply simulator	●	●	●	●	●	●	●	●	●	●	●	●	●	●	$1,357.00
	MFT-XFMR Replacement transformer for PS-100	●	●	●	●	●	●	●	●	●	●	●	●	●	●	$74.00
	NSV24 US Battery back-up module								●	●	●	●	●	●	●	$783.00
	**NSV-BAT** 12V 1.2AH Battery (2 required for NSV24 US)								●	●	●	●	●	●	●	$119.00
	**ZG-X40** 120 to 24 VAC, 40 VA Transformer	●	●	●	●	●	●	●	●	●	●	●	●	●	●	$89.00
	**ZG-CBLS** Electrical junction box for LF actuators				●											$87.00
	**43442-00001** Cable gland (for NEMA 4 models)		●	●			●		●							No Charge
	**11097-00001** Gasket for cable gland (for NEMA 4 models)		●	●			●		●							No Charge

FIRE AND SMOKE ACCESSORIES		FSAF	FSNF	FSLF	List Price
	**BAE165 US** 165°F Electric thermal sensor. SPST, NC	●	●	●	$199.00
	**S2A-F** Auxiliary switch, 2x SPDT, 3A resistive (0.5A inductive) @ 250 VAC	●	●		$302.00

067001 - 04/13 - Subject to change. © Belimo Aircontrols (USA), Inc.

6 ENERGY VALVES

- Improve coil Delta T by utilizing Belimo Delta T Manager™ mode to match the installed characteristic of the coil.
- Save pump distribution energy by eliminating coil overflow.
- Improve plant performance by improving chiller or boiler efficiency.
- Reduce unwanted chiller or boiler staging by improving plant DT.
- Achieve coil performance that follows the calculated design flow rates exactly.
- Simplified valve sizing and selection, no C_V calculations required.
- Provides data to the BAS, enabling continuous commissioning of coils which allows customized control strategies. Uses diagnostics to achieve green design criteria and continuous commissioning requirements.

Applications

The Energy Valve is a two-way pressure independent valve that optimizes, documents and proves water coil performance. Using the Electronic Pressure Independent Valve (ePIV) platform, the Energy Valve measures the coil energy using an embedded electromagnetic flow sensor, water supply, and return temperature sensors.

The Energy Valve uses the Belimo Delta T Manager algorithm to monitor the coil performance and optimizes the available energy of the coil. The Energy Valve has standard analog signal and feedback wiring and communicates data to the DDC system via BACnet MS/TP, BACnet IP and TCP/IP. The actuator stores all the coil performance data such as Delta T and energy usage. All the coil performance data, stored trends, and control functions can be sent to the BAS via the data network.

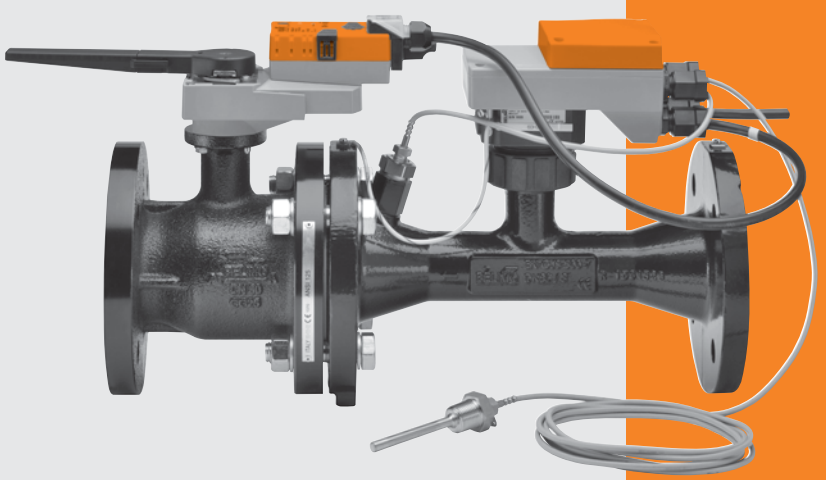

Energy Valve Nomenclature

EV	250S	-127	+ARB	24	-65-A01-2-D
Energy Valve 2-way Flanged	**Valve Size** 250 = 2½" 300 = 3" 400 = 4" 500 = 5" 600 = 6" S = Stainless Steel Ball and Stem	**Flow Rate** 127 GPM Refer to page 6-4	**Actuator Type** Non-Spring Return ARB GRB	**Power Supply** 24 = 24 VAC/DC	**Valve Size** 65 mm 80 mm 100 mm 125 mm 150 mm

Ordering Example

1 Choose the valve actuator combination.

EV250S-127+ARB24-65-A01-2-D **+NC** **+Tagging (if needed)**

2 Specify preference or configuration.

Set-Up

Non-Spring Models
NC = Normally Closed

Refers to valve ports from inlet to outlet, per flow arrow.

3 Does order require tagging?

Tagging:
Valves may be tagged per customer specification. ($10.00 charge per tag)

Example:
AHU-1
FCU-2

Part number for tagging:
99981-00101

4 Complete Ordering Example: EV250S-127+ARB24-65-A01-2-D

Control Valve Product Range

Energy Valve Product Range
EV..

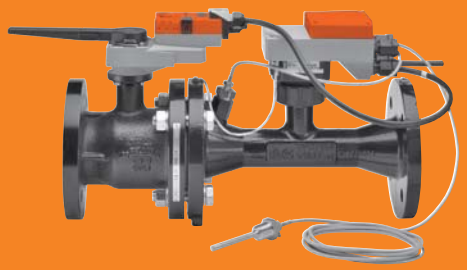

EV

Equal Percentage Characteristic

	Valve Nominal Size		Type	Suitable Actuators
GPM	Inches	DN [mm]	Flanged	Non-Spring Return
90	2½	65	EV250S-127	ARB24-65-A01-2-D
95				
105				
110				
115				
121				
127*				
133	3	80	EV300S-180	ARB24-80-A01-2-D
141				
149				
157				
173				
180*				
195	4	100	EV400S-317	GRB24-100-A01-2-D
210				
225				
240				
255				
270				
285				
300				
317*				
335	5	125	EV500S-495	GRB24-125-A01-2-D
353				
371				
389				
407				
425				
443				
461				
479				
495*				
515	6	150	EV600S-713	GRB24-150-A01-2-D
537				
559				
581				
603				
625				
647				
669				
691				
713*				

*V'nom = Maximum flow for each valve body size.

Mode of Operation

The Energy Valve controls water flow and/or Delta T while monitoring, trending and storing water temperatures, flow and energy usage of the coil. Information is reported to the BAS using BACnet MSTP, BACnet IP enabling owners to see energy usage.

Product Features

Energy Valve provides precise control of any coil directly saving energy consumption. Its unique data trending and storage capability coupled with BACnet TCP/IP communication make continuous commissioning possible in a cost effective way.

Actuator Specifications

Control type	proportional
Manual override	AR, GR
Electrical connection	3 ft [1m] cable with ½" conduit fitting

Valve Specifications

Service	chilled or hot water, 60% glycol (open loop and steam not allowed)
Flow characteristic	equal percentage
Controllable flow range	75°
Sizes	2½", 3", 4", 5", 6"
End fitting	pattern to mate with ANSI 125 flange
Materials	
Body	
Valve	cast iron - GG25
Sensor housing	ductile iron - GGG50
Ball	stainless steel
Stem	stainless steel
Seats	Teflon® PTFE
Seat O-rings	Viton rubber
Characterizing disc	stainless steel
O-rings	EPDM (lubricated)
Media temp range	23°F to 248°F (-5°C to +120°C)
Body pressure rating	ANSI 125, class B

°F	Psi
-20° to 150°	200
200°	180
225°	180
250°	175

Close-off pressure	100 psi
Differential pressure range (ΔP)	5 to 50 psid
Leakage	0%
Inlet length required in front of valve	5x DN
Conductivity	min. 20uS/cm
Remote temperature sensor length	32.8 ft [10m]

067001 - 04/13 - Subject to change. © Belimo Aircontrols (USA), Inc.

SET-UP

		2-WAY VALVE
NON-SPRING RETURN ACTUATOR STAYS IN LAST POSITION	**ARB… Series GRB… Series**	**NC*:** Normally Closed- valve will open as voltage increases.

*Feedback signal is always NC

Valve is set up at the factory based on customer needs, see ordering example on section tab.

FLOW TOLERANCE

Flow Control Tolerance:
±10% of V'nom

Flow Measurement Tolerance:
±2% of V'nom

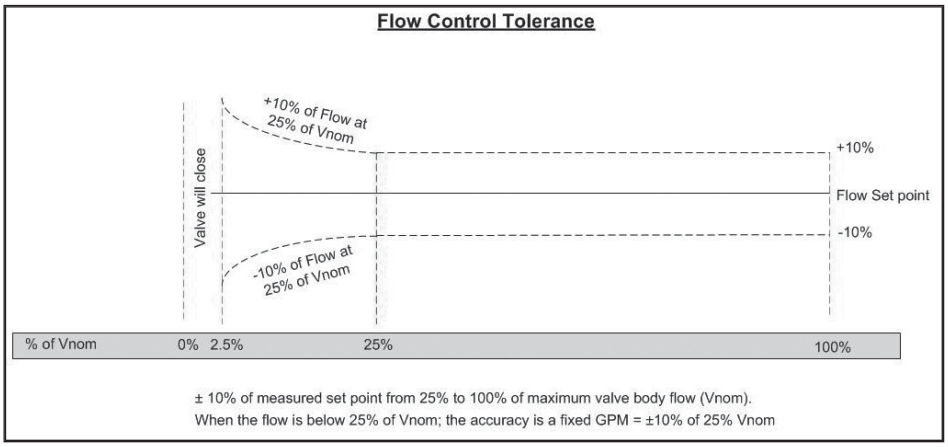

FUNCTIONALITY

The Energy Valve offers different operating modes which can be selected using the web interface.

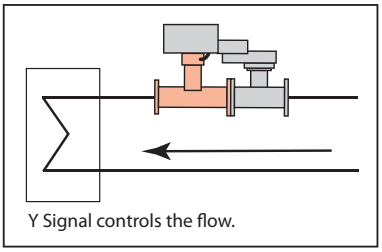
Y Signal controls the flow.

Characterized Position Control
The position of the actuator can be controlled with the Y-Signal. The Energy Valve will then work like a normal pressure dependent valve. The actuator is positioned based on the DDC control signal.

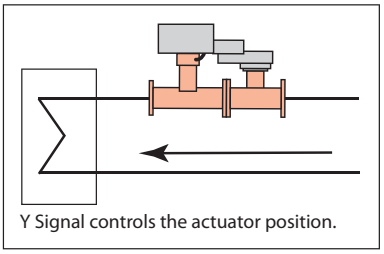
Y Signal controls the actuator position.

Pressure Independent Flow Control
The flow is controlled with the Y-Signal. The Energy Valve works like an ePIV. The valve senses any change in flow and modulates the actuator to maintain the flow setpoint based on the DDC control signal.

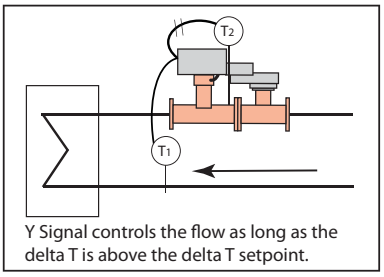

Y Signal controls the flow as long as the delta T is above the delta T setpoint.

Pressure Independent Flow + Delta T Manager
The Flow is controlled with the Y- Signal. The Energy Valve works like an ePIV but if the measured Delta T is lower than the defined min. Delta T regardless of the control signal Y the maximum flow will be limited by the Delta T Manager logic.

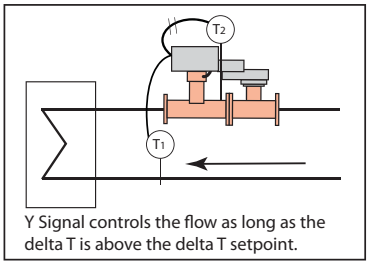

Y Signal controls the flow as long as the delta T is above the delta T setpoint.

Characterized Position Control + Delta T Manager
The position of the actuator can be controlled with the Y-Signal. The Energy Valve works like a pressure dependent valve. If the measured Delta T is lower than the defined min Delta T, regardless of the control signal Y, the maximum flow will be limited by the Delta T Manager logic.

Powered by Belimo SharedLogic Technology
Powered by Optimum Energy™

067001 - 04/13 - Subject to change. © Belimo Aircontrols (USA), Inc.

INSTALLATION

Inlet Length
The Energy Valve requires a section of straight pipe on the valve inlet to guarantee sensor accuracy. This section should be at least 5 pipe diameters long with respect to the size of the valve.

DN65 5 x DN = 12.5" [317 mm]
DN80 5 x DN = 15" [381 mm]
DN100 5 x DN = 20" [508 mm]
DN125 5 x DN = 25" [635 mm]
DN150 5 x DN = 30" [762 mm]

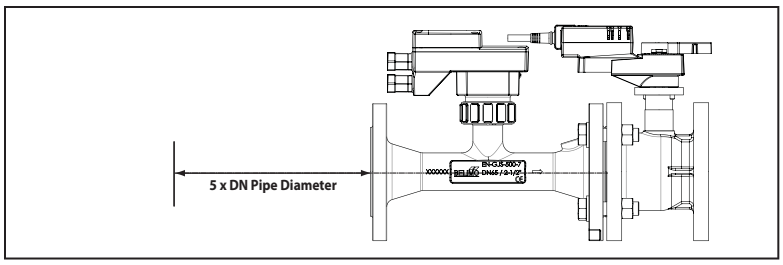

Output Length
No requirements for outlet length.
Elbows can be installed directly after the valve.

PIPING

The Energy Valve is recommended to be installed on the return side of the coil. This diagram is for typical applications only. Consult engineering specification and drawings for particular circumstances. Install provided thermal well on the other side of the coil (T1). P/T ports are recommended on either side of the valve and the supply side of the heat transfer device to allow for pressure/flow measurement/calculation.

It is not necessary to install one strainer per unit. Belimo recommends installing one strainer per system. If the system has multiple branches, it is recommended to install one strainer per branch.

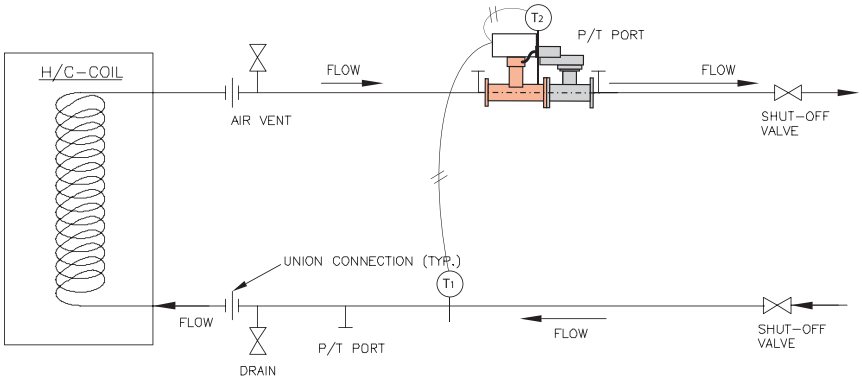

ORIENTATION

Energy Valves shall be installed with flow in the direction of the arrow on the valve body.

The valve assembly can be installed in a vertical or horizontal arrangement, as long as the actuator is positioned to avoid condensation from dripping onto the actuator.

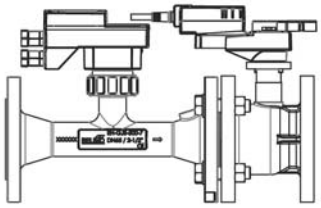

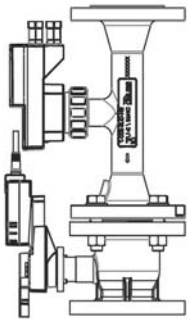

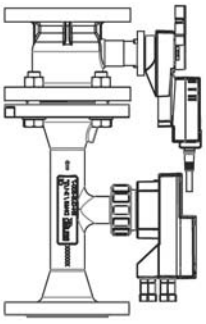



067001 - 04/13 - Subject to change. © Belimo Aircontrols (USA), Inc.

Energy Valves
Non-Spring Return Actuators

2-way Valve with Stainless Steel Ball and Stem, Flanged Ends

Valve Specifications

Service	chilled or hot water, 60% glycol (open loop and steam not allowed)
Flow characteristic	equal percentage / linear
Controllable flow range	75°
Sizes	2½", 3", 4", 5", 6"
End fitting	pattern to mate with ANSI 125 flange
Materials:	
Body	
Valve	cast iron - GG25
Sensor housing	ductile iron - GGG50
Ball	stainless steel
Stem	stainless steel
Seats	Teflon® PTFE
Characterizing disc	stainless steel
O-rings	EPDM (lubricated)
Body pressure rating	according to ANSI 125, standard class B
Media temp. range	23°F to 248°F (-5°C to +120°C)
Conductivity	min. 20uS/cm
Differential pressure range (ΔP)	5 to 50 psid
Leakage	0%
Inlet length required in front of valve	5x DN
Power supply for the Flow sensor	sensor is powered by the actuator
Remote temperature sensor length	32.8 ft [10m]

5 YEAR WARRANTY

Non-Spring Return Actuators



ACTUATOR PART #						ARB24-65-A01-2-D	ARB24-80-A01-2-D	GRB24-100-A01-2-D	GRB24-125-A01-2-D	GRB24-150-A01-2-D
Control type						Proportional	Proportional	Proportional	Proportional	Proportional
Manual override						•	•	•	•	•
Running time						90 seconds	90 seconds	90 seconds	90 seconds	90 seconds
Noise level						<45 dB(A)	<45 dB(A)	<45 dB(A)	<45 dB(A)	<45 dB(A)
ELECTRICAL CONNECTION:										
3 ft cable, ½" conduit fitting						•	•	•	•	•
	Flow Rate		Valve Nominal Size							
EPIV Model #	GPM	Liter/Min	Inches	DN mm	Close-off psi					
EV250S-127	127	480	2½	65	100	$8,017.00				
EV300S-180	180	680	3	80	100		$9,891.00			
EV400S-317	317	1200	4	100	100			$11,363.00		
EV500S-495	495	1875	5	125	100				$14,036.00	
EV600S-713	713	2700	6	150	100					$18,046.00

ENERGY VALVE

067001 - 04/13 - Subject to change. © Belimo Aircontrols (USA), Inc.

		Non-Spring Return Actuator		
CABLES		**GRB**	**ARB**	**List Price**
	EV-RT-15 Remote temperature sensor 4.9 ft [1.5 meters]	•	•	$513.00
	EV-RT-30 Remote temperature sensor 9.8 ft [3 meters]	•	•	$513.00
	EV-RT-50 Remote temperature sensor 16.4 ft [5 meters]	•	•	$513.00
	EV-RT-100 Remote temperature sensor 32.8 ft [10 meters]	•	•	$513.00
	**ZTH-2** Handheld interface module that allows field programming of MFT actuators. Order PN. 99981-00450	*Available for MFT Actuators*		$596.00
WEATHERSHEILDS				
	ZS-EPIV-EV-80 Sizes DN65 and DN80		•	$1,051.00
	ZS-EPIV-EV-150 Sizes DN100, DN125 and DN150	•		$1,051.00
AUXILIARY SWITCHES & POTENTIOMETERS				
	**S1A** Auxiliary switch - 1x SPDT, 3A (0.5A inductive) @ 250 VAC	•	•	$84.00
	S2A Auxiliary switch - 2x SPDT, 3A (0.5A inductive) @ 250 VAC	•	•	$125.00

067001 - 04/13 - Subject to change. © Belimo Aircontrols (USA), Inc.

7 PRESSURE INDEPENDENT CONTROL VALVES (PICCV & ePIV)

- Pressure independent valves compensate for pressure variations, performing a continual balancing function to maintain system performance at varying loads.
- Predictable flow throughout valve travel eliminates over-pumping and provides favorable energy savings.
- Equal percentage flow characteristic leads to system controllability.
- PICCV and ePIV prevent energizing additional chillers by maintaining desired Delta T.
- Constant flow performance significantly reduces actuator movement, providing less hunting and wear on the valve assembly.
- Pressure independent valves are selected based on coil flow rate and no C_V calculations are needed.

Applications



Pressure independent valves directly control the water flow required by the coil and are not affected by pressure fluctuations in the system. The valves are selected based on the GPM requirements of the coil and no C_V calculations are needed. By precisely controlling the flow, pressure independent valves eliminate the need for balancing valves, thus reducing the installation and balancing cost. By far, the biggest benefit for the owner comes in the form of energy savings by eliminating overflow through the coil. Overflow wastes energy by over pumping and is the main cause of the low Delta T syndrome in chilled water systems.

The Pressure Independent Characterized Control Valve (PICCV) combines a differential pressure regulator with a 2-way control valve to supply a specific flow for each degree of ball opening–regardless of system pressure fluctuations. The valve performs the function of a balancing valve and control valve in one unit. Therefore, the flow characteristic and operation of the valve is not distorted in the system.

The Electronic Pressure Independent Valve (ePIV) directly measures flow by combining a magnetic flow meter and a 2-way control valve. The actuator has a powerful algorithm that modulates the control valve to maintain the exact flow based on the control signal set by the DDC Controller. The flow reading is reported back to the controller using a standard signal, and this value can be used by the Building Automation System (BAS) to perform advanced control and energy strategies.

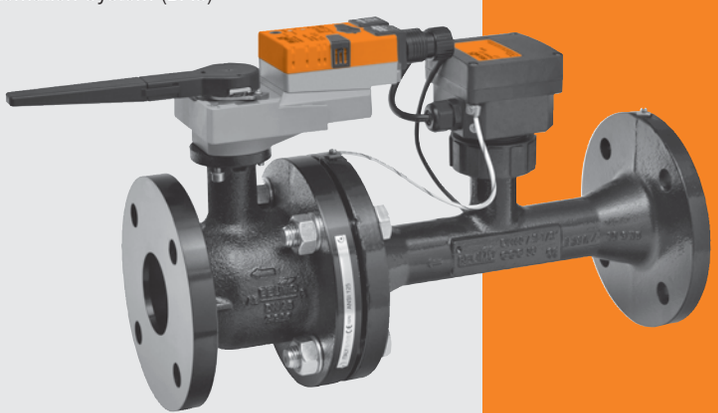

Pressure independent valves can be used to regulate flow through air handlers, heating and cooling coils, fan coil units, unit ventilators and VAV re-heat coils.

Pressure Independent Characterized Control Valve™ Nomenclature

PICCV	25	-012	+LRX	24	-MFT	
Pressure Independent Characterized Control Valve 2-way Chrome Plated Brass Ball and Brass Stem	**Valve Size** 25 = 1” 32 = 1¼” 40 = 1½” 50 = 2”	**Flow Rate** 3 GPM Refer to table	**Actuator Type** Non-Spring Return LRB… LRX… ARX… Spring Return TF… LF… AF…	**Power Supply** 24 = 24 VAC/DC 120 = 120 VAC	**Control** -3 = Floating Point -MFT = Multi-Function Technology	S = Built-in Auxiliary Switch

PRESSURE INDEPENDENT VALVES

Ordering Example

1 Choose the valve actuator combination.

PICCV-25-012+LRX24-MFT

2 Specify preference or configuration.

3 **For MFT orders only - select programming code**

+NC | **+Tagging (if needed)**

Set-Up

Non-Spring Models
NO = Normally Open
NC = Normally Closed

Spring Return Models
NO/FO = Normally Open/Fail Open
NO/FC = Normally Open/Fail Closed

NC/FO = Normally Closed/Fail Open
NC/FC = Normally Closed/Fail Closed

Refers to valve ports from inlet to outlet, per flow arrow.

P-10019 (A19)

P-10019 (A19)	2 to 10 VDC
P-10028 (A28)	0 to 10 VDC
P-20031 (W31)	0.02 to 5.00 seconds PWM
P-20032 (W32)	0.10 to 25.50 seconds PWM
P-20034 (W34)	0.59 to 2.93 seconds PWM
P-30003 (F03)	Floating Point
P-10019 (A19)	On/Off**

4 Does order require tagging?

Tagging:
Valves may be tagged per customer specification. ($10.00 charge per tag)

Example:
AHU-1
FCU-2

Part number for tagging:
99981-00101

5 Complete Ordering Example: PICCV-25-012+LRX24-MFT+NC+A19

** Wire for On/Off

Pressure Independent Characterized Control Valves™ (½" and ¾") Nomenclature

P	2	050	B	005	LRX	24	-MFT
Valve Type P= Pressure Independent Characterized Control Valve	**Porting** 2 = Two Way	**Valve Body Size** 050 = ½" 075 = ¾"	**Body Type** B = Chrome Plated	**Flow Rate** 005 = .50 GPM 010 = 1 GPM 015 = 1.5 GPM 020 = 2 GPM 025 = 2.5 GPM 030 = 3 GPM 035 = 3.5 GPM 040 = 4 GPM 045 = 4.5 GPM 050 = 5 GPM 055 = 5.5 GPM 060 = 6 GPM 065 = 6.5 GPM 070 = 7 GPM 075 = 7.5 GPM 080 = 8 GPM 085 = 8.5 GPM 090 = 9 GPM 095 = 9.5 GPM 100 = 10 GPM	**Actuator Type** Non-Spring Return LRB… LRX… Spring Return TF… LF…	**Power Supply** 24 = 24 VAC/DC 120 = 120 VAC	**Control** -3 = Floating Point -MFT = Multi-Function Technology

Ordering Example

1 Choose the valve actuator combination.

P2050B005+LRX24-MFT

2 Specify preference or configuration.

3 **For MFT Orders Only - Select Programming Code**

+NC **+Tagging (if needed)**

4 Does order require tagging?

Set-Up

Non-Spring Return Actuator Models
NO = Normally Open
NC = Normally Closed

Spring Return Actuator Models
NO/FO = Normally Open/Fail Open
NO/FC = Normally Open/Fail Closed

NC/FO = Normally Closed/Fail Open
NC/FC = Normally Closed/Fail Closed

Refers to valve ports from inlet to outlet, per flow arrow.

P-10019 (A19)**

P-10019 (A19)	2 to 10 VDC
P-10028 (A28)	0 to 10 VDC
P-20031 (W31)	0.02 to 5.00 seconds PWM
P-20032 (W32)	0.10 to 25.50 seconds PWM
P-20034 (W34)	0.59 to 2.93 seconds PWM
P-30003 (F03)	Floating Point

Tagging:
Valves may be tagged per customer specification. ($10.00 charge per tag)

Example:
AHU-1
FCU-2

Part number for tagging:
99981-00101

5 Complete Ordering Example: P2050B005+LRX24-MFT+NC+A19

** For a complete list of P-Codes, see page 7-6.

BELIMO

This Page
Intentionally Left Blank

N40086 - 04/12 - Subject to change. © Belimo Aircontrols (USA), Inc.

Control Valve Product Range

Pressure Independent Characterized Control Valve Product Range
P2..



PICCV

Equal Percentage Characteristic

		Valve Nominal Size		Type	Suitable Actuators				
	GPM**	Inches	DN [mm]	2-way NPT	Non-Spring Return			Spring Return	
Forged Body	0.5	½	15	P2050B005	LRB24-3	LRX24-MFT	LRCB24-3 (Heat Pump Only)	TFRX24-MFT	LF24-MFT US
	1	½	15	P2050B010					
	1.5	½	15	P2050B015					
	2	½	15	P2050B020					
	3	½	15	P2050B030					
	4	½	15	P2050B040					
	5	½	15	P2050B050					
	6	¾	20	P2075B060					
	7	¾	20	P2075B070					
	8	¾	20	P2075B080					
	9	¾	20	P2075B090					
	10	¾	20	P2075B100					
	12	1	25	PICCV-25-012					
	14	1	25	PICCV-25-014					
	16	1	25	PICCV-25-016					
	18	1	25	PICCV-25-018					
Cast Body	18	1¼	32	PICCV-32-018		ARX24-MFT			AFRX24-MFT
	20	1¼	32	PICCV-32-020					
	22	1¼	32	PICCV-32-022					
	24	1¼	32	PICCV-32-024					
	26	1¼	32	PICCV-32-026					
	26	1½	40	PICCV-40-026					
	28	1½	40	PICCV-40-028					
	30	1½	40	PICCV-40-030					
	33	1½	40	PICCV-40-033					
	33	2	50	PICCV-50-033					
	36	2	50	PICCV-50-036					
	40	2	50	PICCV-50-040					
	44	2	50	PICCV-50-044					
	48	2	50	PICCV-50-048					
	52	2	50	PICCV-50-052					
	56	2	50	PICCV-50-056					
	60	2	50	PICCV-50-060					
	65	2	50	PICCV-50-065					
	70	2	50	PICCV-50-070					
	75	2	50	PICCV-50-075					
	80	2	50	PICCV-50-080					
	90	2	50	PICCV-50-090					
	100	2	50	PICCV-50-100					

Mode of Operation
The Pressure Independent Characterized Control Valve (PICCV) is a two-way valve which combines the functionality of a control valve and a pressure regulating valve, creating one precise product which is unaffected by pressure variations in a system.

Product Features
Constant flow regardless of pressure variations in the system at set degrees of ball opening. Maximizes chiller ΔT, preventing energizing additional chillers due to low ΔT. Simplified valve sizing and selection, no C_V calculations required.

Actuator Specifications

Control type	floating point, non-spring multi-function technology (MFT) non-spring and spring return
Manual override	(LRB, LRX, LRC, AFRX, ARX)
Electrical connection	3 ft [1m] cable with ½" conduit fitting (additional cable lengths are available)

Valve Specifications

Service	chilled or hot water, 60% glycol max
Flow characteristic	equal percentage
Controllable flow range	75°
Sizes	½", ¾", 1", 1¼", 1½", 2"
End fitting	NPT female ends
Materials	
Body	brass, nickel plated
Ball	chrome plated brass
Stem	chrome plated brass
Seats	
½" and ¾"	Teflon® PTFE
1" to 2"	Teflon® PTFE /Tefzel®
Seat O-rings	Viton®
Characterizing disc	
½"& ¾"	brass
1"-2"	Tefzel®
O-rings	EPDM (lubricated)
Diaphragm	
½"& ¾"	Nomex reinforced silicone
1"-2"	polyester reinforced silicone
Regulator components	stainless steel/brass/ Delrin 500AF/Nitrile
Spring	stainless steel
Media temp range	0°F to 212°F [-18°C to 100°C]
Body pressure rating	
600 psi	½", ¾", 1"
400 psi	1¼", 1½", 2"
Close off pressure	200 psi
Differential pressure (ΔP) range	5 to 50 psid
Leakage	ANSI Class IV (0.01% of rated valve capacity at 50 psi differential)

Tefzel® and Teflon® are registered trademarks of DuPont

067001 - 04/13 - Subject to change. © Belimo Aircontrols (USA), Inc.

SET-UP

		2-WAY VALVE SPECIFY UPON ORDERING			
NON-SPRING RETURN Stays in Last Position	**LRB24-3** Floating type actuators	Power to pin 2 will drive valve CW. Power to pin 3 will drive valve CCW. The above will function when the directional switch is in the "1" position-to reverse select the "0" position.			
	LRX24-MFT **ARX24-MFT** MFT type actuators†	**NC:** Normally Closed-valve will open as voltage increases. Actuator switch on Y2.	**NO:** Normally Open-valve will close as voltage increases. Actuator switch on Y1.		
SPRING RETURN Note Fail Position	**LF24-MFT US** **AFRX24-MFT** MFT type actuators†	**NC/FO Valve:** Normally Closed-valve will open as voltage increases. Actuator switch on CW. Spring Action: Will fail open upon power loss.	**NC/FC Valve:** Normally Closed-valve will open as voltage increases. Actuator switch on CW. Spring Action: Will fail closed upon power loss.	**NO/FC Valve:** Normally Open-valve will close as voltage increases. Actuator switch on CCW. Spring Action: Will fail closed upon power loss.	**NO/FO Valve:** Normally Open-valve will close as voltage increases. Actuator switch on CCW. Spring Action: Will fail open upon power loss.
	TFRX24-MFT	**NC/FO Valve:** Normally Closed-valve will open as voltage increases. Switch on ↷ (arrow setting) Spring Action: Will fail open upon power loss.	**NC/FC Valve:** Normally Closed-valve will open as voltage increases. Switch on ↷ (arrow setting) Spring Action: Will fail closed upon power loss.	**NO/FC Valve:** Normally Open-valve will close as voltage increases. Switch on ↶ (arrow setting) Spring Action: Will fail closed upon power loss.	**NO/FO Valve:** Normally Open-valve will close as voltage increases. Switch on ↶ (arrow setting) Spring Action: Will fail open upon power loss.

† The design flow rate of PICCVs with MFT actuators are dependent on their Minimum and Maximum Percentages of rotation.
Actuators must be re-programmed for different Minimum and Maximum Settings if actuator set-ups must be changed.
Please refer to PICCV online technical documentation, MFT Adjustment Tables, for re-programming the settings.

067001 - 04/13 - Subject to change. © Belimo Aircontrols (USA), Inc.

FLOW PATTERN

PICCV consists of a differential pressure regulator in series with a control valve.

The amount of flow that passes through the valve is controlled by the use of a pressure regulator that moves according to the change in pressure above and below it.

All pressure changes are absorbed by the pressure regulator allowing the differential pressure to be held constant over the control valve section thereby giving the same flow.

When P1 is **low**, it **increases** the opening of the regulator assembly to maintain flow.

When P1 is **high**, it **reduces** the opening of the regulator assembly to maintain flow.

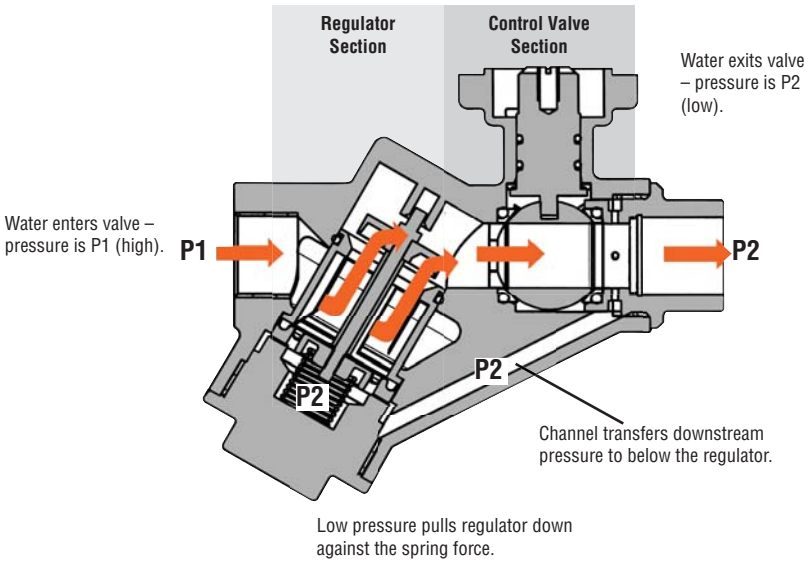

INSTALLATION

PICCVs should be installed with flow in the direction of the arrow on the valve body. If installed backwards, there could be damage to either the diaphragm or the regulator.

The valve assembly can be installed in a vertical or horizontal arrangement, as long as the actuator is positioned to avoid condensation from dripping on the actuator.



PIPING

PICCVs are recommended to be installed on the return side of the coil. This diagram is for typical applications only. Consult engineering specification and drawings for particular circumstances. P/T ports are recommended on either side of the valve and the supply side of the heat transfer device to allow for pressure/flow measurement/calculation. Refer to PICCV technical documentation for flow verification and commissioning procedures.

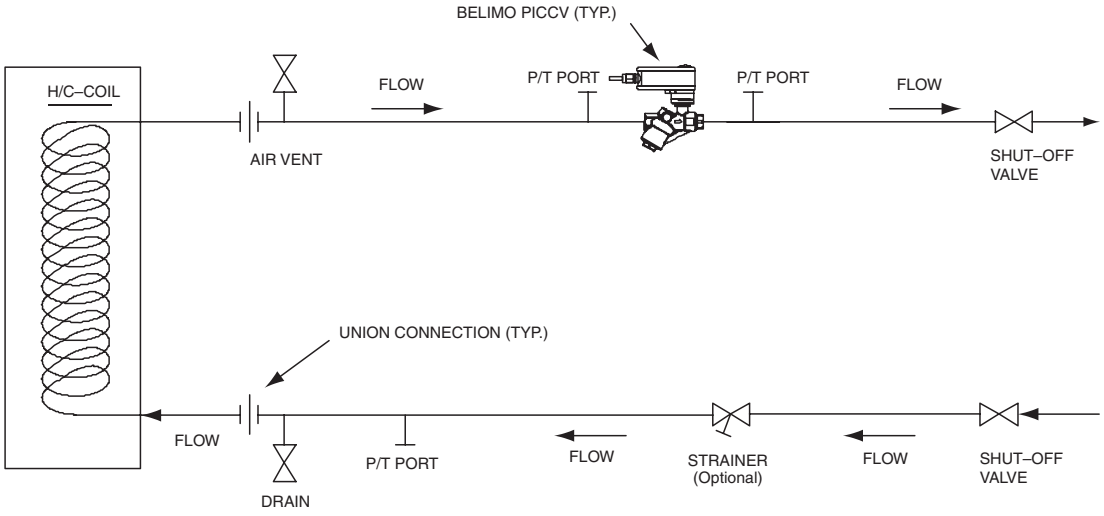

067001 - 04/13 - Subject to change. © Belimo Aircontrols (USA), Inc.

P2 Series Pressure Independent Characterized Control Valve with Floating Point and MFT, Non-Spring Return Actuators

2-way Valve with Chrome Plated Brass Ball and Stem, NPT Female Ends

BELIMO

Valve Specifications	
Service	chilled or hot water, 60% glycol
Flow characteristic	equal percentage
Controllable flow range	75°
Sizes	½", ¾", 1"
End fitting	NPT female ends
Materials:	
Body	forged brass, nickel plated
Ball	chrome plated brass
Stem	chrome plated brass
Seat	Teflon® PTFE
Seat O-rings	Viton®
Characterizing disc	brass (½" and ¾"),TEFZEL® (1")
O-rings	EPDM (lubricated)
Diaphragm	Nomex reinforced silicone (½" and ¾"), polyester reinforced silicone (1")
Regulator components	stainless steel, brass, Nitrile
Spring	stainless steel
Media temp. range	0°F to 212°F [-18°C to +100°C]
Body pressure rating	600 psi
Differential pressure (ΔP) range	5 to 50 psid
Leakage	ANSI Class IV (0.01% of rated valve capacity at 50 psi differential)

5 YEAR WARRANTY

Non-Spring Return Actuators





ACTUATOR PART #						LRB24-3	LRX24-MFT
Control type						Floating Point	Proportional/MFT
Manual override						•	•
Running time						95 seconds (varies in the flow setting)	100 seconds
Noise level						<35 dB(A)	<35 dB(A)
ELECTRICAL CONNECTION:							
3 ft cable, ½" conduit fitting						•	•
	Flow Rate		Valve Nominal Size				
PICCV Model #	GPM	Liter/Sec	Inches	DN mm	Close-off psi		
P2050B005	0.5	0.03	½	15	200	$491.00	$673.00
P2050B010	1	0.06	½	15	200	$491.00	$673.00
P2050B015	1.5	0.09	½	15	200	$491.00	$673.00
P2050B020	2	0.13	½	15	200	$491.00	$673.00
P2050B025	2.5	0.16	½	15	200	$491.00	$673.00
P2050B030	3	0.19	½	15	200	$491.00	$673.00
P2050B035	3.5	0.22	½	15	200	$491.00	$673.00
P2050B040	4	0.25	½	15	200	$491.00	$673.00
P2050B045	4.5	0.28	½	15	200	$491.00	$673.00
P2050B050	5	0.32	½	15	200	$491.00	$673.00
P2050B055	5.5	0.35	½	15	200	$491.00	$673.00
P2075B060	6	0.38	¾	20	200	$511.00	$696.00
P2075B065	6.5	0.41	¾	20	200	$511.00	$696.00
P2075B070	7	0.44	¾	20	200	$511.00	$696.00
P2075B075	7.5	0.47	¾	20	200	$511.00	$696.00
P2075B080	8	0.5	¾	20	200	$511.00	$696.00
P2075B085	8.5	0.54	¾	20	200	$511.00	$696.00
P2075B090	9	0.57	¾	20	200	$511.00	$696.00
P2075B095	9.5	0.6	¾	20	200	$511.00	$696.00
P2075B100	10	0.63	¾	20	200	$511.00	$696.00
PICCV-25-011	11	0.69	1	25	200	$585.00	$806.00
PICCV-25-012	12	0.76	1	25	200	$585.00	$806.00
PICCV-25-013	13	0.82	1	25	200	$585.00	$806.00
PICCV-25-014	14	0.88	1	25	200	$585.00	$806.00
PICCV-25-015	15	0.95	1	25	200	$585.00	$806.00
PICCV-25-016	16	1.01	1	25	200	$585.00	$806.00
PICCV-25-017	17	1.07	1	25	200	$585.00	$806.00
PICCV-25-018	18	1.14	1	25	200	$585.00	$806.00
PICCV-25-019	19	1.2	1	25	200	$585.00	$806.00

½" body has three discs with different flow capabilities (.50 GPM to 1.0 GPM) (1.5 GPM to 2.5 GPM) (3 GPM to 5.5 GPM)
1" body has two discs with different flow capabilities (11 GPM to 16 GPM) (17 GPM to 19 GPM)

067001 - 04/13 - Subject to change. © Belimo Aircontrols (USA), Inc.

P2 Series Pressure Independent Characterized Control Valve with MFT, Non-Spring Return Actuator

2-way Valve with Chrome Plated Brass Ball and Stem, NPT Female Ends

Valve Specifications

Service	chilled or hot water, 60% glycol
Flow characteristic	equal percentage
Controllable flow range	75°
Sizes	1¼", 1½", 2"
End fitting	NPT female ends
Materials:	
Body	cast brass, nickel plated
Ball	chrome plated brass
Stem	chrome plated brass
Seat	Teflon® PTFE
Seat O-rings	Viton®
Characterizing disc	TEFZEL®
O-rings	EPDM (lubricated)
Diaphragm	polyester reinforced silicone
Regulator components	stainless steel, brass, Delrin 500AF, Teflon®, Nitrile
Spring	stainless steel
Media temp. range	0°F to 212°F [-18°C to +100°C]
Body pressure rating	400 psi
Differential pressure (ΔP) range	5 to 50 psid
Leakage	ANSI Class IV (0.01% of rated valve capacity at 50 psi differential)

5 YEAR WARRANTY

Non-Spring Return Actuator



ACTUATOR PART #	ARX24-MFT
Control type	Proportional/MFT
Manual override	•
Running time	100 seconds
Noise level	<45 dB(A)
ELECTRICAL CONNECTION:	
3 ft cable, ½" conduit fitting	•

PICCV Model #	Flow Rate GPM	Flow Rate Liter/Sec	Valve Nominal Size Inches	Valve Nominal Size DN mm	Close-off psi	
PICCV-32-018	18	1.14	1¼	32	200	$1,474.00
PICCV-32-019	19	1.2	1¼	32	200	$1,474.00
PICCV-32-020	20	1.26	1¼	32	200	$1,474.00
PICCV-32-021	21	1.32	1¼	32	200	$1,474.00
PICCV-32-022	22	1.39	1¼	32	200	$1,474.00
PICCV-32-023	23	1.45	1¼	32	200	$1,474.00
PICCV-32-024	24	1.51	1¼	32	200	$1,474.00
PICCV-32-025	25	1.58	1¼	32	200	$1,474.00
PICCV-32-026	26	1.64	1¼	32	200	$1,474.00
PICCV-40-026	26	1.64	1½	40	200	$1,582.00
PICCV-40-027	27	1.7	1½	40	200	$1,582.00
PICCV-40-028	28	1.77	1½	40	200	$1,582.00
PICCV-40-029	29	1.83	1½	40	200	$1,582.00
PICCV-40-030	30	1.89	1½	40	200	$1,582.00
PICCV-40-031	31	1.96	1½	40	200	$1,582.00
PICCV-40-032	32	2.01	1½	40	200	$1,582.00
PICCV-40-033	33	2.08	1½	40	200	$1,582.00
PICCV-50-033	33	2.08	2	50	200	$1,783.00
PICCV-50-034	34	2.15	2	50	200	$1,783.00
PICCV-50-035	35	2.21	2	50	200	$1,783.00
PICCV-50-036	36	2.27	2	50	200	$1,783.00
PICCV-50-037	37	2.33	2	50	200	$1,783.00
PICCV-50-038	38	2.4	2	50	200	$1,783.00
PICCV-50-039	39	2.46	2	50	200	$1,783.00
PICCV-50-040	40	2.52	2	50	200	$1,783.00
PICCV-50-044	44	2.78	2	50	200	$4,637.00
PICCV-50-048	48	3.03	2	50	200	$4,637.00
PICCV-50-052	52	3.28	2	50	200	$4,637.00
PICCV-50-056	56	3.53	2	50	200	$4,637.00
PICCV-50-060	60	3.79	2	50	200	$4,637.00
PICCV-50-065	65	4.1	2	50	200	$4,637.00
PICCV-50-070	70	4.42	2	50	200	$4,637.00
PICCV-50-075	75	4.73	2	50	200	$4,637.00
PICCV-50-080	80	5.05	2	50	200	$4,637.00
PICCV-50-090	90	5.68	2	50	200	$4,637.00
PICCV-50-100	100	6.31	2	50	200	$4,637.00

1½" body has two discs with different flow capabilities (26 GPM to 30 GPM) (31 GPM to 33 GPM).
2" has a small and a large body. The larger body has two discs with different flow capabilities. Small: (33 GPM to 40 GPM), Large: (44 GPM to 80 GPM) (90 GPM to 100 GPM).

067001 - 04/13 - Subject to change. © Belimo Aircontrols (USA), Inc.

P2 Series Pressure Independent Characterized Control Valve with MFT, Non-Spring Return Actuators

2-way Valve with Chrome Plated Brass Ball and Stem, NPT Female Ends

MULTI-FUNCTION TECHNOLOGY					
Description	**P-CODE**	**Control Input**	**Running Time**	**Built-in Feedback**	**List Price**
P-10019	A19	2-10 VDC	100 seconds	2-10 VDC	No Charge
P-10028	A28	0-10 VDC	100 seconds	0-10 VDC	No Charge
P-10118	AAJ	2-6 VDC	100 seconds	2-10 VDC	No Charge
P-10119	AAK	6-10 VDC	100 seconds	2-10 VDC	No Charge
P-10137	AD5	2-5 VDC	100 seconds	2-10 VDC	No Charge
P-20031	W31	0.02-5.00 seconds PWM	100 seconds	2-10 VDC	No Charge
P-20032	W32	0.10-25.5 seconds PWM	100 seconds	2-10 VDC	No Charge
P-20034	W34	0.59-2.93 seconds PWM	100 seconds	2-10 VDC	No Charge
P-30003	F03	Floating Point	100 seconds	2-10 VDC	No Charge
P-10019†	A19	On/Off	100 seconds	2-10 VDC	No Charge

Example: ARX24-MFT is the basic model. Add the P… pre-set MFT configuration number and list price to the actuator when ordering, as needed.
Note: Most popular configurations available at no additional cost. All other configurations carry a $34.00 list price.
† Wire for On/Off. Refer to PICCV technical documentation for wiring diagram.

067001 - 04/13 - Subject to change. © Belimo Aircontrols (USA), Inc.

P2 Series Pressure Independent Characterized Control Valve with MFT, Spring Return Actuators

2-way Valve with Chrome Plated Brass Ball and Stem, NPT Female Ends

Valve Specifications

Service	chilled or hot water, 60% glycol
Flow characteristic	equal percentage
Controllable flow range	75°
Sizes	½", ¾", 1", 1¼"
End fitting	NPT female ends
Materials:	
Body	forged brass (1¼" cast brass), nickel plated
Ball	chrome plated brass
Seats	Teflon® PTFE
Seat O-rings	Viton®
Characterizing disc	brass (½" and ¾"), Tefzel® (1" and 1¼")
O-rings	EPDM (lubricated)
Diaphragm	Nomex reinforced silicone (½" and ¾"), polyester reinforced silicone (1" and 1¼")
Regulator components	stainless steel, brass, Nitrile
Spring	stainless steel
Media temp. range	0°F to 212°F [-18°C to +100°C]
Body pressure rating	600 psi (½", ¾", 1") 400 psi (1¼")
Differential pressure (ΔP) range	5 to 50 psid
Leakage	ANSI Class IV (0.01% of rated valve capacity at 50 psi differential)

5 YEAR WARRANTY

Spring Return Actuators







ACTUATOR PART #						TFRX24-MFT	LF24-MFT US	AFRX24-MFT
Control type						Proportional/MFT	Proportional/MFT	Proportional/MFT
Manual override								•
Running time						100 seconds	100 seconds	100 seconds
Noise level						<35 dB(A)	<35 dB(A)	≤40 dB(A) motor @ 100 seconds ≤62 dB(A) spring return
ELECTRICAL CONNECTION:								
3 ft cable, ½" conduit fitting						•	•	•
			Valve Nominal Size					
PICCV Model #	Flow Rate GPM	Liter/Sec	Inches	DN mm	Close-off psi			
P2050B005	0.5	0.03	½	15	200	$780.00	$828.00	
P2050B010	1	0.06	½	15	200	$780.00	$828.00	
P2050B015	1.5	0.09	½	15	200	$780.00	$828.00	
P2050B020	2	0.13	½	15	200	$780.00	$828.00	
P2050B025	2.5	0.16	½	15	200	$780.00	$828.00	
P2050B030	3	0.19	½	15	200	$780.00	$828.00	
P2050B035	3.5	0.22	½	15	200	$780.00	$828.00	
P2050B040	4	0.25	½	15	200	$780.00	$828.00	
P2050B045	4.5	0.28	½	15	200	$780.00	$828.00	
P2050B050	5	0.32	½	15	200	$780.00	$828.00	
P2050B055	5.5	0.35	½	15	200	$780.00	$828.00	
P2075B060	6	0.38	¾	20	200		$845.00	
P2075B065	6.5	0.41	¾	20	200		$845.00	
P2075B070	7	0.44	¾	20	200		$845.00	
P2075B075	7.5	0.47	¾	20	200		$845.00	
P2075B080	8	0.5	¾	20	200		$845.00	
P2075B085	8.5	0.54	¾	20	200		$845.00	
P2075B090	9	0.57	¾	20	200		$845.00	
P2075B095	9.5	0.6	¾	20	200		$845.00	
P2075B100	10	0.63	¾	20	200		$845.00	
PICCV-25-011	11	0.69	1	25	200		$940.00	
PICCV-25-012	12	0.76	1	25	200		$940.00	
PICCV-25-013	13	0.82	1	25	200		$940.00	
PICCV-25-014	14	0.88	1	25	200		$940.00	
PICCV-25-015	15	0.95	1	25	200		$940.00	
PICCV-25-016	16	1.01	1	25	200		$940.00	
PICCV-25-017	17	1.07	1	25	200		$940.00	
PICCV-25-018	18	1.14	1	25	200		$940.00	
PICCV-25-019	19	1.2	1	25	200		$940.00	
PICCV-32-018	18	1.14	1¼	32	200			$1,632.00
PICCV-32-019	19	1.2	1¼	32	200			$1,632.00
PICCV-32-020	20	1.26	1¼	32	200			$1,632.00
PICCV-32-021	21	1.32	1¼	32	200			$1,632.00
PICCV-32-022	22	1.39	1¼	32	200			$1,632.00
PICCV-32-023	23	1.45	1¼	32	200			$1,632.00
PICCV-32-024	24	1.51	1¼	32	200			$1,632.00
PICCV-32-025	25	1.58	1¼	32	200			$1,632.00
PICCV-32-026	26	1.64	1¼	32	200			$1,632.00

½" body has three discs with different flow capabilities (.50 GPM to 1.0 GPM) (1.5 GPM to 2.5 GPM) (3 GPM to 5.5 GPM)
1" body has two discs with different flow capabilities (11 GPM to 16 GPM) (17 GPM to 19 GPM)

067001 - 04/13 - Subject to change. © Belimo Aircontrols (USA), Inc.

P2 Series Pressure Independent Characterized Control Valve with MFT, Spring Return Actuators

2-way Valve with Chrome Plated Brass Ball and Stem, NPT Female Ends

Valve Specifications

Service	chilled or hot water, 60% glycol
Flow characteristic	equal percentage
Controllable flow range	75°
Sizes	1½", 2"
End fitting	NPT female ends
Materials:	
Body	cast brass, nickel plated
Ball	chrome plated brass
Seat	Teflon® PTFE
Seat O-rings	Viton®
Characterizing disc	TEFZEL®
O-rings	EPDM (lubricated)
Diaphragm	polyester reinforced silicone
Regulator components	stainless steel, brass, Delrin 500AF, Teflon®, Nitrile
Spring	stainless steel
Media temp. range	0°F to 212°F [-18°C to +100°C]
Body pressure rating	400 psi
Differential pressure (ΔP) range	5 to 50 psid
Leakage	ANSI Class IV (0.01% of rated valve capacity at 50 psi differential)

5 YEAR WARRANTY

Spring Return Actuators



ACTUATOR PART #	AFRX24-MFT
Control type	Proportional/MFT
Manual override	•
Running time	100 seconds
Noise level	≤40 dB(A) motor @ 100 seconds ≤62 dB(A) spring return
ELECTRICAL CONNECTION:	
3 ft cable, ½" conduit fitting	•

PICCV Model #	Flow Rate GPM	Flow Rate Liter/Sec	Valve Nominal Size Inches	Valve Nominal Size DN mm	Close-off psi	
PICCV-40-026	26	1.64	1½	40	200	$1,797.00
PICCV-40-027	27	1.7	1½	40	200	$1,797.00
PICCV-40-028	28	1.77	1½	40	200	$1,797.00
PICCV-40-029	29	1.83	1½	40	200	$1,797.00
PICCV-40-030	30	1.89	1½	40	200	$1,797.00
PICCV-40-031	31	1.96	1½	40	200	$1,797.00
PICCV-40-032	32	2.01	1½	40	200	$1,797.00
PICCV-40-033	33	2.08	1½	40	200	$1,797.00
PICCV-50-033	33	2.08	2	50	200	$1,956.00
PICCV-50-034	34	2.15	2	50	200	$1,956.00
PICCV-50-035	35	2.21	2	50	200	$1,956.00
PICCV-50-036	36	2.27	2	50	200	$1,956.00
PICCV-50-037	37	2.33	2	50	200	$1,956.00
PICCV-50-038	38	2.4	2	50	200	$1,956.00
PICCV-50-039	39	2.46	2	50	200	$1,956.00
PICCV-50-040	40	2.52	2	50	200	$1,956.00
PICCV-50-044	44	2.78	2	50	200	$4,735.00
PICCV-50-048	48	3.03	2	50	200	$4,735.00
PICCV-50-052	52	3.28	2	50	200	$4,735.00
PICCV-50-056	56	3.53	2	50	200	$4,735.00
PICCV-50-060	60	3.79	2	50	200	$4,735.00
PICCV-50-065	65	4.1	2	50	200	$4,735.00
PICCV-50-070	70	4.42	2	50	200	$4,735.00
PICCV-50-075	75	4.73	2	50	200	$4,735.00
PICCV-50-080	80	5.05	2	50	200	$4,735.00
PICCV-50-090	90	5.68	2	50	200	$4,735.00
PICCV-50-100	100	6.31	2	50	200	$4,735.00

1½" body has two discs with different flow capabilities (26 GPM to 30 GPM) (31 GPM to 33 GPM).

2" has a small and a large body. The larger body has two discs with different flow capabilities. Small: (33 GPM to 40 GPM), Large: (44 GPM to 80 GPM) (90 GPM to 100 GPM).

067001 - 04/13 - Subject to change. © Belimo Aircontrols (USA), Inc.

MULTI-FUNCTION TECHNOLOGY					
Description	**P-CODE**	**Control Input**	**Running Time**	**Built-in Feedback**	**List Price**
P-10019	A19	2-10 VDC	100 seconds	2-10 VDC	No Charge
P-10028	A28	0-10 VDC	100 seconds	0-10 VDC	No Charge
P-10118	AAJ	2-6 VDC	100 seconds	2-10 VDC	No Charge
P-10119	AAK	6-10 VDC	100 seconds	2-10 VDC	No Charge
P-10137	AD5	2-5 VDC	100 seconds	2-10 VDC	No Charge
P-20031	W31	0.02-5.00 seconds PWM	100 seconds	2-10 VDC	No Charge
P-20032	W32	0.10-25.5 seconds PWM	100 seconds	2-10 VDC	No Charge
P-20034	W34	0.59-2.93 seconds PWM	100 seconds	2-10 VDC	No Charge
P-30003	F03	Floating Point	100 seconds	2-10 VDC	No Charge
P-10019†	A19	On/Off	100 seconds	2-10 VDC	No Charge

Example: AFRX24-MFT is the basic model. Add the P… pre-set MFT configuration number and list price to the actuator when ordering, as needed.

Note: Most popular configurations available at no additional cost. All other configurations carry a $34.00 list price.

† Wire for On/Off. Refer to PICCV technical documentation for wiring diagram.

067001 - 04/13 - Subject to change. © Belimo Aircontrols (USA), Inc.

Optimize Your Heat Pump Application

by using a Pressure Independent Characterized Control Valve

What are the benefits?

A balanced system is achieved without the need for a balancer to manually balance each circuit. Because the system is dynamic and the PICCV performs dynamic balancing, Differential Pressures are no longer an issue to be concerned with. The PICCV will maintain a constant flow at part load and during morning warm-up when all loops become critical. With the PICCV, each terminal gets the required flow, no over-flow or under-flow at this critical time. The PICCV allows a mechanic to easily commission additional circuits after the initial system is up and running, again thanks to dynamic balancing capability. The PICCV is available in flow rates from .5 to 100 GPM. Choosing the right PICCV is as easy as determining the appropriate flow for your heat pump and then choosing the valve that satisfies the flow requirement.

How does it work?

Keep with the same idea of a conventional heat pump system, then add the 2-way Pressure Independent Characterized Control Valve (PICCV). Think savings, and not necessarily first cost of equipment. Add a VFD, with its known and accepted benefits, and a PICCV as your flow control valve, and you have now optimized your system flow with little additional cost.

HEAT PUMP IN HEATING MODE

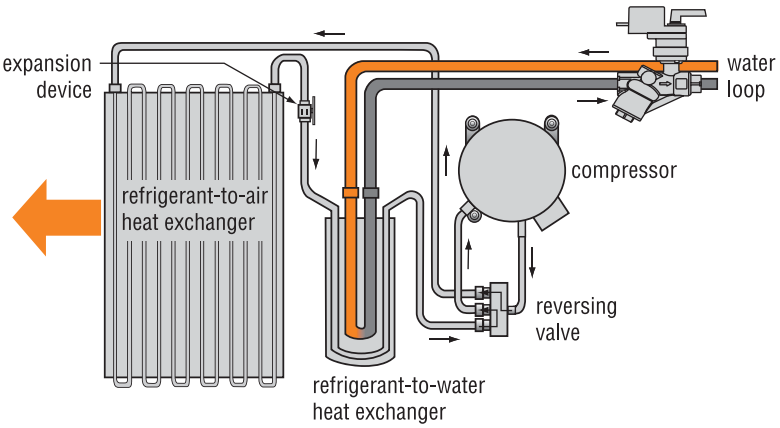

HEAT PUMP IN COOLING MODE

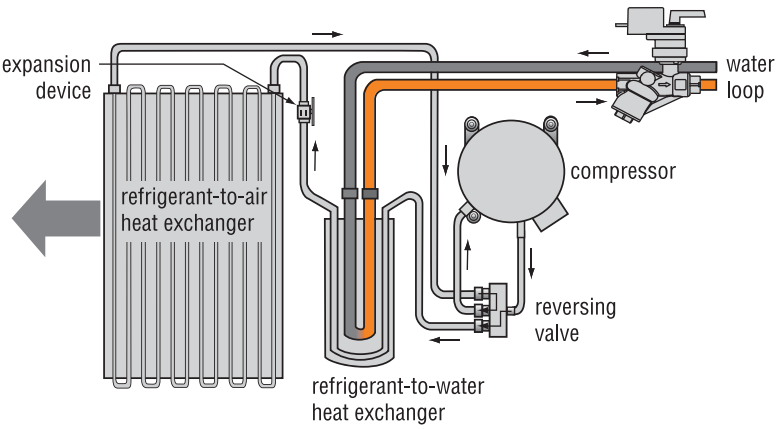

067001 - 04/13 - Subject to change. © Belimo Aircontrols (USA), Inc.

P2 Series PICCV for Water Source Heat Pumps for Fast Running Time with Switch Options and On/Off, Non-Spring Return Actuator

2-way Valve with Chrome Plated Brass Ball and Stem, NPT Female Ends

Valve Specifications

Service	chilled or hot water, 60% glycol
Flow characteristic	equal percentage
Controllable flow range	75º
Sizes	½", ¾", 1"
End fitting	NPT female ends
Materials:	
Body	forged brass, nickel plated
Ball	chrome plated brass
Stem	chrome plated brass
Seats	Teflon® PTFE
Seat O-rings	Viton®
Characterizing disc	brass (½" and ¾"), TEFZEL® (1")
O-rings	EPDM (lubricated)
Diaphragm	Nomex reinforced silicone (½" and ¾"), polyester reinforced silicone (1")
Regulator components	stainless steel, brass, Nitrile
Spring	stainless steel
Media temp. range	0°F to 212°F [-18°C to +100°C]
Body pressure rating	600 psi
Differential pressure (ΔP) range	5 to 50 psid
Leakage	ANSI Class IV (0.01% of rated valve capacity at 50 psi differential)

5 YEAR WARRANTY

Non-Spring Return Actuator



ACTUATOR PART #	LRCB24-3
Control type	On/Off
Manual override	•
Running time	40 seconds
Noise level	<35 dB(A)
ELECTRICAL CONNECTION:	
3 ft cable, ½" conduit fitting	•

PICCV Model #	Flow Rate GPM	Flow Rate Liter/Sec	Valve Nominal Size Inches	Valve Nominal Size DN mm	Close-off psi	
P2050B005	0.5	0.03	½	15	200	$441.00
P2050B010	1	0.06	½	15	200	$441.00
P2050B015	1.5	0.09	½	15	200	$441.00
P2050B020	2	0.13	½	15	200	$441.00
P2050B025	2.5	0.16	½	15	200	$441.00
P2050B030	3	0.19	½	15	200	$441.00
P2050B035	3.5	0.22	½	15	200	$441.00
P2050B040	4	0.25	½	15	200	$441.00
P2050B045	4.5	0.28	½	15	200	$441.00
P2050B050	5	0.32	½	15	200	$441.00
P2050B055	5.5	0.35	½	15	200	$441.00
P2075B060	6	0.38	¾	20	200	$463.00
P2075B065	6.5	0.41	¾	20	200	$463.00
P2075B070	7	0.44	¾	20	200	$463.00
P2075B075	7.5	0.47	¾	20	200	$463.00
P2075B080	8	0.5	¾	20	200	$463.00
P2075B085	8.5	0.54	¾	20	200	$463.00
P2075B090	9	0.57	¾	20	200	$463.00
P2075B095	9.5	0.6	¾	20	200	$463.00
P2075B100	10	0.63	¾	20	200	$463.00
PICCV-25-011	11	0.69	1	25	200	$608.00
PICCV-25-012	12	0.76	1	25	200	$608.00
PICCV-25-013	13	0.82	1	25	200	$608.00
PICCV-25-014	14	0.88	1	25	200	$608.00
PICCV-25-015	15	0.95	1	25	200	$608.00
PICCV-25-016	16	1.01	1	25	200	$608.00
PICCV-25-017	17	1.07	1	25	200	$608.00
PICCV-25-018	18	1.14	1	25	200	$608.00
PICCV-25-019	19	1.2	1	25	200	$608.00

½" body has three discs with different flow capabilities (.50 GPM to 1.0 GPM) (1.5 GPM to 2.5 GPM) (3 GPM to 5.5 GPM).
1" body has two discs with different flow capabilities (11 GPM to 16 GPM) (17 GPM to 19 GPM).

067001 - 04/13 - Subject to change. © Belimo Aircontrols (USA), Inc.

LR Series Non-Spring Return Actuators

Custom, Direct Coupled, 45 in-lbs Minimum Torque

BELIMO

Actuator Specifications

Torque	45 in-lbs [5 Nm]
Angle of rotation♦	max. 90°, adjustable with mechanical stop electronically variable
Fits Shaft diameter	N/A
Position indication	reflective visual Indicator (snap-on)
Manual override	external push-button
Direction of rotation♦	reversible with switch
Dimensions	6.18" x 2.6" x 2.34" [157 x 66 x 59.4 mm]
Electrical connection	18 GA plenum rated cable, 1/2" conduit fitting
Overload protection	electronic throughout rotation
Housing	NEMA 2/IP54
Agency listings	cULus acc. to UL 60730-1A/-2-14, CAN/CSA E60730-1:02, CSA C22.2 No. 24-93, CE acc. to 2006/95/EC and 89/336/EEC

♦ Variable with MFT



LRX24-3

MFT

MFT= 2-10 VDC Default, or Set, Modify, Read:

- **Control (PWM, VDC range, Floating Point)**
- **Feedback (0-10 VDC, 0-5 VDC, 2-10 VDC, Variable)**
- **Motion (run time)**

All LR Actuators have BDCM

LISTED 94 D5 TEMP. IND. & REG. EQUIP.

5 YEAR WARRANTY

Non-Spring Return Actuators

Model	Control Input	Feedback	Power Supply	Running Time(s)	VA Rating	Cable Length	Re-order Number	List Price
CUSTOMIZE PRODUCTS								
LRX24-3	On/Off, Floating Point	Add on	24 VAC/DC	95	2	10 ft.	LR000 RC3 000	$244.00
LRX24-3	On/Off, Floating Point	Add on	24 VAC/DC	95	2	16 ft.	LR000 RC5 000	$266.00
LRX24-3-S	On/Off, Floating Point	Built-in	24 VAC/DC	95	2	10 ft.	LR020 RA3 000	$326.00
LRX24-3-S	On/Off, Floating Point	Built-in	24 VAC/DC	95	2	16 ft.	LR020 RA5 000	$347.00
LRX120-3	On/Off, Floating Point	Add on	100-230 VAC	95	4	10 ft.	LR060 RA3 000	$284.00
LRX120-3	On/Off, Floating Point	Add on	100-230 VAC	95	4	16 ft.	LR060 RA5 000	$305.00
LRX24-MFT	Various	Various	24 VAC/VDC	Various	5	3 ft.	LR100 RC1 XXX**	$399.00

** See page 7-9 for P-Codes available.

067001 - 04/13 - Subject to change. © Belimo Aircontrols (USA), Inc.

Actuator Specifications

Torque	180 in-lbs [20 Nm]
Angle of rotation♦	max 90°, adjustable with mechanical stop electronically variable
Position indication	handle
Manual override	external push-button
Direction of rotation♦	reversible with switch
Dimensions	7.47" x 3.45" x 2.52" [189.8 x 88 x 64 mm]
Electrical connection	18 GA plenum rated cable, 1/2" conduit connector
Overload protection	electronic throughout rotation
Auxiliary switch(es)	(-S) models: 1 SPDT, 3A (0.5A inductive) @ 250 V adjustable 5° to 85°
Housing	NEMA 2/IP54
Agency listings	cULus acc. to UL 60730-1A/-2-14, CAN/CSA E60730-1:02, CSA C22.2 No. 24-93, CE acc. to 2006/95/EC and 89/336/EEC

♦ Variable with MFT



ARX24-MFT

MFT

MFT= 2-10 VDC Default, or Set, Modify, Read:

- **Control (PWM, VDC range, Floating Point)**
- **Feedback (0-10 VDC, 0-5 VDC, 2-10 VDC, Variable)**
- **Motion (run time)**

All AR Actuators have BDCM

LISTED 94 D5 TEMP. IND. & REG. EQUIP. c UL us

5 YEAR WARRANTY

Non-Spring Return Actuators

Model	Control Input	Feedback	Power Supply	Running Time(s)	VA Rating	Cable Length	Re-order Number	List Price
CUSTOMIZE PRODUCTS								
ARX24-MFT	Various	Various	24 VAC/VDC	Various	6	3 ft.	AR100 0C1 XXX**	$527.00
ARX24-MFT	Various	Various	24 VAC/VDC	Various	6	10 ft.	AR100 0C3 XXX**	$557.00
ARX24-MFT	Various	Various	24 VAC/VDC	Various	6	16 ft.	AR100 0C5 XXX**	$579.00

** See page 7-9 for P-Codes available.
The P-Code programs the actuator for the desired Control Input, Feedback and Running Time.

067001 - 04/13 - Subject to change. © Belimo Aircontrols (USA), Inc.

		Non-Spring Return Actuator		Spring Return Actuator			
WEATHERSHIELDS		**LR**	**AR**	**LF**	**AF**	**AFR**	**List Price**
	**ZS-CCV-90***			•	•		$215.00
	ZS-CCV-100*	•	•				$215.00
	ZS-CCV-110*					•	$215.00
EXTENSION BRACKET							
	CCV-EXT-KIT CCV/PICCV valve neck extension kit	•	•	•	•	•	$193.00
AUXILIARY SWITCHES & POTENTIOMETERS							
	**S1A** Auxiliary switch - 1x SPDT, 3A (0.5A inductive) @ 250 VAC	•	•				$84.00
	S2A Auxiliary switch - 2x SPDT, 3A (0.5A inductive) @ 250 VAC	•	•				$125.00
	P140A GR Feedback potentiometer 140 Ω	•	•				$138.00
	P500A GR Feedback potentiometer 500 Ω	•	•				$138.00
	P1000A GR Feedback potentiometer 1000 Ω	•	•				$138.00
	P2800A GR Feedback potentiometer 2800 Ω	•	•				$138.00
	P5000A GR Feedback potentiometer 5000 Ω	•	•				$138.00
	P10000A GR Feedback potentiometer 10000 Ω	•	•				$138.00
INTERFACES, CABLES							
	**ZTH-GEN US** Handheld interface module that allows field programming of MFT actuators	*Available for all MFT Actuators*					$596.00

NOTE: CCV-EXT-KIT is an option for all CCVs except for B6 flanged CCVs where it is factory mounted as a standard.
NOTE: For TF actuators, no weathershield available at this time. Please call 800-543-9038 for assistance.
* Designed to NEMA 4 specifications.

067001 - 04/13 - Subject to change. © Belimo Aircontrols (USA), Inc.

Electronic Pressure Independent Valve (ePIV) Nomenclature

P6	250S	127	+ARX	24	-PI
Electronic Pressure Independent Valve 2-way Flanged	**Valve Size** 250 = 2½" 300 = 3" 400 = 4" 500 = 5" 600 = 6" S = Stainless Steel Ball and Stem	**Flow Rate** 127 GPM Refer to table	**Actuator Type** Non-Spring Return AR... GR... Electronic Fail-Safe AKR… GKR…	**Power Supply** 24 = 24 VAC/DC	PI = Pressure Independent Valve Proportional Control

Ordering Example

1 Choose the valve actuator combination.

P6250S-127+ARX24-PI **+NC** **+Tagging (if needed)**

2 Specify preference or configuration.

Set-Up

Non-Spring Models
NO = Normally Open
NC = Normally Closed

Electronic Fail-Safe Models
NO/FO = Normally Open/Fail Open
NO/FC = Normally Open/Fail Closed

NC/FO = Normally Closed/Fail Open
NC/FC = Normally Closed/Fail Closed

Refers to valve ports from inlet to outlet, per flow arrow.

3 Does order require tagging?

Tagging:
Valves may be tagged per customer specification. ($10.00 charge per tag)

Example:
AHU-1
FCU-2

Part number for tagging:
99981-00101

4 Complete Ordering Example: P6250S-127+ARX24-PI+NC

BELIMO

This Page
Intentionally Left Blank

O67001- 04/13 - Subject to change. © Belimo Aircontrols (USA), Inc.

Control Valve Product Range

Electronic Pressure Independent Control Valve Product Range P6..

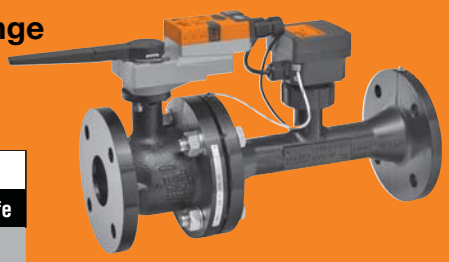

ePIV

Equal Percentage Characteristic

	Valve Nominal Size		Type	Suitable Actuators	
GPM	Inches	DN [mm]	Flanged	Non-Spring Return	Electronic Fail-Safe
105	2½	65	P6250S-105	ARX24-PI	AKRX24-PI
110			P6250S-110		
115			P6250S-115		
121			P6250S-121		
127*			P6250S-127		
133	3	80	P6300S-133		
141			P6300S-141		
149			P6300S-149		
157			P6300S-157		
173			P6300S-173		
180*			P6300S-180		
195	4	100	P6400S-195	GRX24-PI	GKRX24-PI
210			P6400S-210		
225			P6400S-225		
240			P6400S-240		
255			P6400S-255		
270			P6400S-270		
285			P6400S-285		
300			P6400S-300		
317*			P6400S-317		
335	5	125	P6500S-335		
353			P6500S-353		
371			P6500S-371		
389			P6500S-389		
407			P6500S-407		
425			P6500S-425		
443			P6500S-443		
461			P6500S-461		
479			P6500S-479		
495*			P6500S-495		
515	6	150	P6600S-515		
537			P6600S-537		
559			P6600S-559		
581			P6600S-581		
603			P6600S-603		
625			P6600S-625		
647			P6600S-647		
669			P6600S-669		
691			P6600S-691		
713*			P6600S-713		

*V'nom = Maximum flow for each valve body size.

Mode of Operation

The Electronic Pressure Independent Control Valve (ePIV) is a two-way valve which is unaffected by pressure variations in a system.

Product Features

Constant flow regardless of pressure variations in the system. Maximizes chiller ΔT, preventing energizing additional chillers due to low ΔT. Simplified valve sizing and selection, no Cv calculations required.

Actuator Specifications

Control type	proportional
Manual override	AR, GR, AKR, GKR
Electrical connection	3 ft [1m] cable with ½" conduit fitting

Valve Specifications

Service	chilled or hot water, 60% glycol
Flow characteristic*	equal percentage/ linear
Controllable flow range	75°
Sizes	2½", 3", 4", 5", 6"
End fitting	pattern to mate with ANSI 125 flange
Materials	
Body	
Valve	cast iron-GG25
Sensor housing	ductile iron- GGG50
Ball	stainless steel
Stem	stainless steel
Seats	Teflon® PTFE
Seat O-rings	Viton rubber
Characterizing disc	stainless steel
O-rings	EPDM (lubricated)
Media temp range	23°F to 248°F (-5°C to 120°C)
Body pressure rating	ANSI 125, Class B

°F	Psi
-20° to 150°	200
200°	180
225°	180
250°	175

Close-off pressure	100 psi
Differential pressure (ΔP) range	5 to 50 psid
Leakage	0%
Inlet length required in front of valve	5x DN
Conductivity	min. 20uS/cm (no fully desalinated systems)

*The flow characteristic can be changed by using the Belimo PC-Tool software

067001 - 04/13 - Subject to change. © Belimo Aircontrols (USA), Inc.

SET-UP

		2-WAY VALVE SPECIFY UPON ORDERING			
NON-SPRING RETURN STAYS IN LAST POSITION	**ARX…Series** **GRX…Series**	**NC:** Normally Closed-valve will open as voltage increases.	**NO:** Normally Open-valve will close as voltage increases.		
ELECTRONIC FAIL-SAFE STAYS IN FAIL-SAFE POSITION	**AKRX…Series** **GKRX…Series**	**NC/FO Valve:** Normally Closed-valve will open as voltage increases. Fail Action: Will fail open upon power loss.	**NC/FC Valve:** Normally Closed-valve will open as voltage increases. Fail Action: Will fail closed upon power loss.	**NO/FC Valve:** Normally Open-valve will close as voltage increases. Fail Action: Will fail closed upon power loss.	**NO/FO Valve:** Normally Open-valve will close as voltage increases. Fail Action: Will fail open upon power loss.

NOTE: Feedback signal is always direct acting (2V close, 10V open).

FLOW PATTERN

The ePIV directly measures flow by combining a magnetic flow meter and a 2-way control valve. The actuator has a powerful algorithm that modulates the control valve to maintain the exact flow based on the control signal set by the DDC Controller. The flow reading is reported back to the controller using a standard signal, and this value can be used by the Building Automation System to perform advanced control and energy strategies.

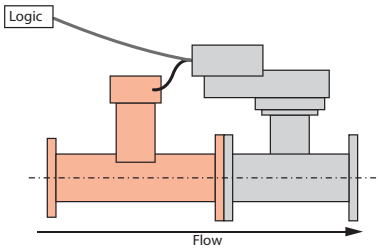

FLOW TOLERANCE

Flow Control Tolerance:
±10% of V'nom

Flow Measurement Tolerance:
±2% of V'nom

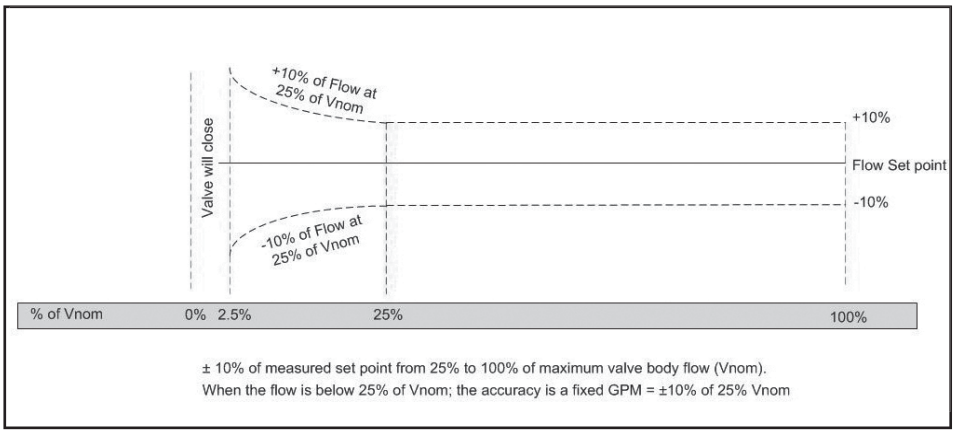

067001 - 04/13 - Subject to change. © Belimo Aircontrols (USA), Inc.

INSTALLATION

ePIVs shall be installed with flow in the direction of the arrow on the valve body.

The valve assembly can be installed in a vertical or horizontal arrangement, as long as the actuator is positioned to avoid condensation from dripping onto the actuator.

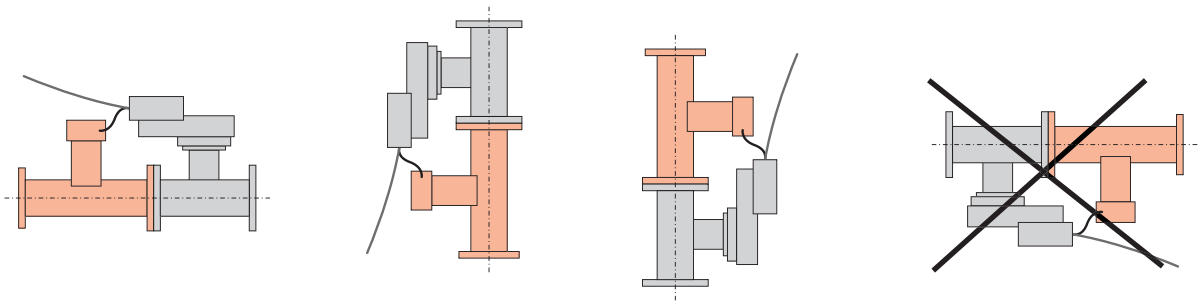

PIPING

The ePIV is recommended to be installed on the return side of the coil. This diagram is for typical applications only. Consult engineering specification and drawings for particular circumstances. P/T ports are recommended on either side of the valve and the supply side of the heat transfer device to allow for pressure/flow measurement/calculation. Refer to ePIV technical documentation for flow verification and commissioning procedures.

It is not necessary to install one strainer per unit. Belimo recommends installing one strainer per system. If the system has multiple branches, it is recommended to install one strainer per branch.

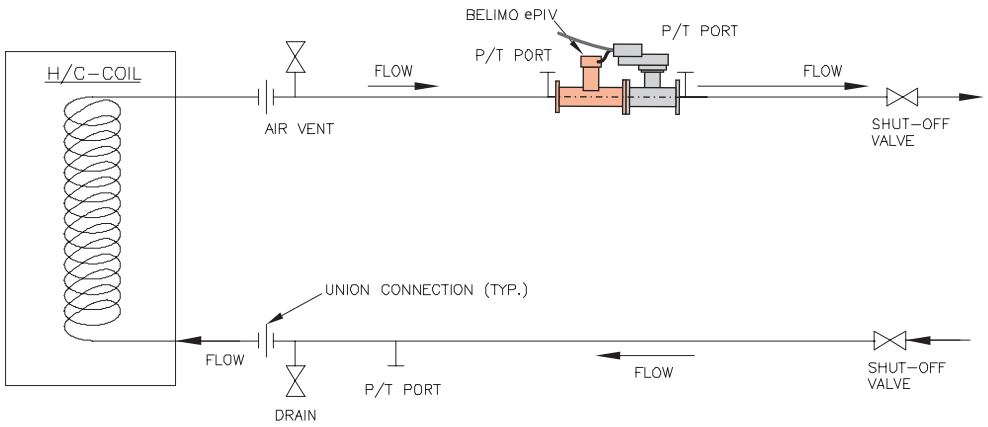

The Electronic Pressure Independent Valves can be piped in a parallel orientation to achieve increased flow rates.

TYPICAL PARALLEL PIPING IN RELATION TO THE INPUT AND OUTPUT

To achieve flows larger than V'nom or nominal flow, it is recommended to connect two valves in parallel leading to a common manifold. To correctly operate these valves, the Multi-Function Technology (MFT) will be employed to utilize one common control signal. It is recommended to use the same signal in parallel (2-10 VDC); the two actuators are wired from the same control signal and the two valves control the flow in an identical pattern, the resulting flow will be the double controlled by an individual valve. This arrangement is preferable to a split signal since it offers a more stable and accurate flow and feedback signal is easier to interpret.

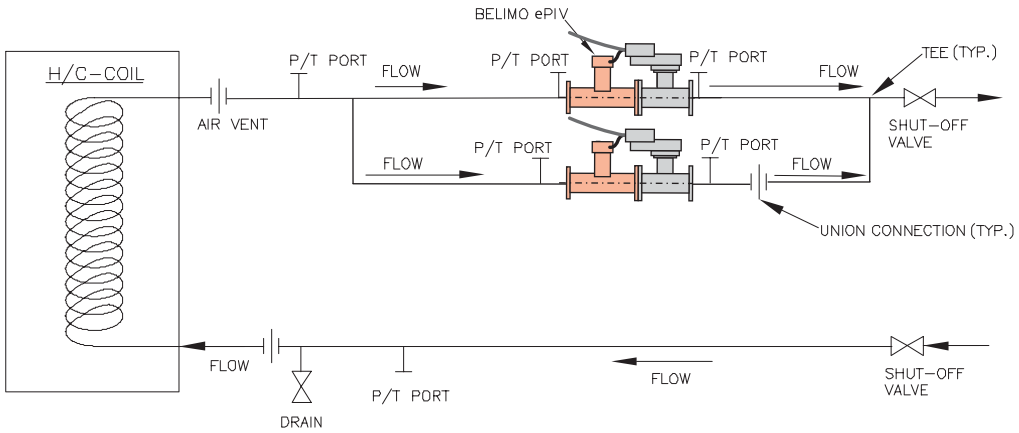

067001 - 04/13 - Subject to change. © Belimo Aircontrols (USA), Inc.

P6 Series Electronic Pressure Independent Valve with Non-Spring Return Actuators

2-way Valve with Stainless Steel Ball and Stem, Flanged Ends

Valve Specifications

Service	chilled or hot water, 60% glycol (closed loop / steam not allowed)
Flow characteristic	equal percentage / linear
Controllable flow range	75°
Sizes	2½", 3", 4", 5", 6"
End fitting	pattern to mate with ANSI 125 flange
Materials:	
Body	
Valve	cast iron - GG25
Sensor housing	ductile iron - GGG50
Ball	stainless steel
Stem	stainless steel
Seats	Teflon® PTFE
Characterizing disc	stainless steel
O-rings	EPDM (lubricated)
Media temp. range	23°F to 248°F (-5°C to 120°C)
Body pressure rating	according to ANSI 125, standard Class B
Conductivity	min. 20uS/cm (no fully desalinated systems)
Differential pressure (ΔP) range	5 to 50 psid
Leakage	0%
Inlet length required in front of valve	5x DN
Power supply for the flow sensor	sensor is powered by the actuator

5 YEAR WARRANTY

Non-Spring Return Actuators



ACTUATOR PART #	ARX24-PI	GRX24-PI
Control type	Proportional	Proportional
Manual override	•	•
Running time	90 seconds	90 seconds
Noise level	<45 dB(A)	<45 dB(A)
ELECTRICAL CONNECTION:		
3 ft cable, ½" conduit fitting	•	•

EPIV Model #	Flow Rate GPM	Flow Rate Liter/Min	Valve Nominal Size Inches	Valve Nominal Size DN mm	Close-off psi		
P6250S-127	127	480	2½	65	100	$6,681.00	
P6300S-180	180	680	3	80	100	$8,243.00	
P6400S-317	317	1200	4	100	100		$9,469.00
P6500S-495	495	1875	5	125	100		$11,697.00
P6600S-713	713	2700	6	150	100		$15,039.00

See pg. 7-17 for complete flow range chart.

067001 - 04/13 - Subject to change. © Belimo Aircontrols (USA), Inc.

P6 Series Electronic Pressure Independent Valve with Electronic Fail-Safe Actuators

2-way Valve with Stainless Steel Ball and Stem, Flanged Ends

Valve Specifications

Service	chilled or hot water, 60% glycol
Flow characteristic	equal percentage
Controllable flow range	75°
Sizes	2½", 3", 4", 5", 6"
End fitting	pattern to mate with ANSI 125 flange
Materials:	
Body	
Valve	cast iron - GG25
Sensor housing	ductile iron - GGG50
Ball	stainless steel
Stem	stainless steel
Seats	Teflon® PTFE
Characterizing disc	stainless steel
O-rings	EPDM (lubricated)
Media temp. range	23°F to 248°F (-5°C to 120°C)
Body pressure rating	According to ANSI 125, standard Class B
Conductivity	Min. 20uS/cm (no fully desalinated systems!)
Differential pressure (ΔP) range	5 to 50 psid
Leakage	0%
Inlet length required in front of valve	5x DN
Power supply for the flow sensor	Sensor is powered by the actuator

5 YEAR WARRANTY

Electronic Fail-Safe Actuators



ACTUATOR PART #	AKRX24-PI	GKRX24-PI
Control type	Proportional	Proportional
Manual override	•	•
Running time	90 seconds	90 seconds
Noise level	<45 dB(A)	<45 dB(A)
ELECTRICAL CONNECTION:		
3 ft cable, ½" conduit fitting	•	•

EPIV Model #	Flow Rate GPM	Flow Rate Liter/Min	Valve Nominal Size Inches	Valve Nominal Size DN mm	Close-off psi		
P6250S-127	127	480	2½	65	100	$7,533.00	
P6300S-180	180	680	3	80	100	$9,094.00	
P6400S-317	317	1200	4	100	100		$10,320.00
P6500S-495	495	1875	5	125	100		$12,547.00
P6600S-713	713	2700	6	150	100		$15,889.00

See pg. 7-17 for complete flow range chart.

067001 - 04/13 - Subject to change. © Belimo Aircontrols (USA), Inc.

		Non-Spring Return Actuator		Spring Return Actuator		
AUXILIARY SWITCHES & POTENTIOMETERS		**GR**	**AR**	**AK**	**GK**	**List Price**
	**S1A** Auxiliary switch - 1x SPDT, 3A (0.5A inductive) @ 250 VAC	•	•			$84.00
	S2A Auxiliary switch - 2x SPDT, 3A (0.5A inductive) @ 250 VAC	•	•			$125.00
	P140A GR Feedback potentiometer 140 Ω	•	•			$138.00
	P500A GR Feedback potentiometer 500 Ω	•	•			$138.00
	P1000A GR Feedback potentiometer 1000 Ω	•	•			$138.00
	P2800A GR Feedback potentiometer 2800 Ω	•	•			$138.00
	P5000A GR Feedback potentiometer 5000 Ω	•	•			$138.00
	P10000A GR Feedback potentiometer 10000 Ω	•	•			$138.00
WEATHERSHIELDS						
	ZS-EPIV-EV-80 Sizes DN65 and DN80		•	•		$1,051.00
	ZS-EPIV-150 Sizes DN100, DN125 and DN150	•			•	$1,051.00
INTERFACES, CABLES						
	**ZTH-GEN US** Handheld interface module that allows field programming of MFT actuators	*Available for all MFT Actuators*				$596.00

067001 - 04/13 - Subject to change. © Belimo Aircontrols (USA), Inc.

CHARACTERIZED CONTROL VALVES (CCV & HTCCV)

- Equal percentage flow characteristic yields a linear heat output.
- C_V values equal to globe valves of the same size requiring no additional system design.
- Valve bodies available with stainless steel trim or chrome plated brass trim depending upon application and cost involved.
- Higher close-off rating ensures shut off.
- 3-way assemblies can be piped for mixing or diverting applications.
- Higher Delta P (50 psi) in sizes ½" to 2".
- Higher media temperature (250°F [120°C]) in sizes ½" to 2".



6-way Characterized Control Valve

- True close-off to isolate both heating and cooling loops.
- Two sequences with different C_V capabilities (eg. heating and cooling).
- Linear flow characteristic.

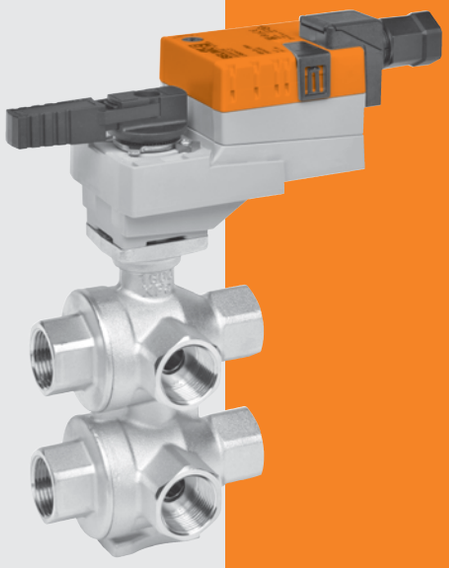

Applications

The Characterized Control Valve (CCV and High Temperature CCV) marks a true advancement in control valves. It combines the high close-off capabilities of a ball valve with a specialized disc that ensures a true equal percentage flow characteristic. Both the HTCCV and CCV are available with spring return and non-spring return actuators. The CCV offers a comprehensive C_V range for various applications, such as air handlers, heating and cooling coils, fan coil units, unit ventilators, and VAV re-heat coils. The HTCCV, with its sturdy construction and specially designed disc, is the perfect solution for a steam control valve with supply pressures of 15 psig or less.

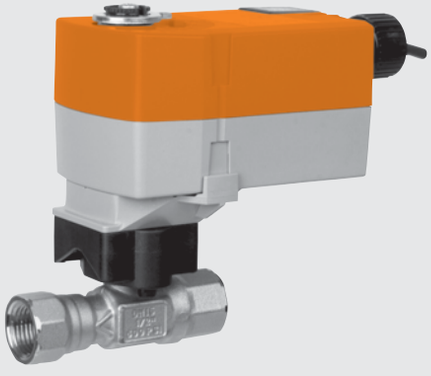

Accurate sizing and selection of your control valves in minutes!

SelectPro™

provides a fast, user-friendly and flexible means for accurately sizing and selecting control valves for hydronic and steam applications in HVAC systems. Software capabilities include:

- Calculating control valve cost for any size project
- Generating valve/actuator submittal data for project
- Printing project data, valve data and pricing
- Exporting project data and selected products to Excel data format
- Saving projects in .xls or .bel file format for future editing or ordering
- Automatically uploading data through web interface for easy ordering

Sizing and Selection Made Simple. Get it Here. Download it Now!

http://www.belimo.us/ishop/cms/sh/selectpro/select.html

BELIMO

8 6-WAY CHARACTERIZED CONTROL VALVES

- True close-off to isolate both heating and cooling loops.
- Two sequences with different Cv capabilities (eg. heating and cooling).
- Linear flow characteristic.

Applications

The 6-way characterized control valve is ideal for chilled beams and radiant ceilings offering reduced wiring by using a single actuator instead of two. It eliminates the need for a change over valve and enables the use of a single coil for heating and cooling.



6-Way Characterized Control Valve Nomenclature

B3	15	029	-	029	LRB	24	-SR
Valve B3 = 3-way	**Valve Size** 15 = ½" 20 = ¾"	**Sequence 1** 029 = 0.29 Cv 046 = 0.46 Cv 073 = 0.73 Cv 116 = 1.16 Cv 150 = 1.50 Cv 186 = 1.86 Cv 290 = 2.90 Cv	Two 3-way = 6-way	**Sequence 2** 029 = 0.29 Cv 046 = 0.46 Cv 073 = 0.73 Cv 116 = 1.16 Cv 150 = 1.50 Cv 186 = 1.86 Cv 290 = 2.90 Cv	**Actuator Type** LR...	**Power Supply** 24 = 24 VAC/VDC	**Control** -SR = 2-10 VDC -MFT = Multi-Function Technology

Ordering Example

1 Choose the valve actuator combination.

B315-029-029+LRB24-SR **+NO** **+Tagging (if needed)**

2 Specify preference or configuration.

Set-Up

Non-Spring Models
NO = Normally Open
NC = Normally Closed

3 Does order require tagging?

Tagging:
Valves may be tagged per customer specification. ($10.00 charge per tag)

Example:
Sequence 1
Sequence 2

Part number for tagging: 99981-00101

4 Complete Ordering Example: B315-029-029+LRB24-SR

Control Valve Product Range

6-Way Characterized Control Valve Product Range
B3W6



CCV

Linear Characteristic

Valve Nominal Size		Type	Suitable Actuators	
Sequence 1 C_V	Sequence 2 C_V	Inches	DN [mm]	6-way NPT	Non-Spring Return	
0.29	0.29	½	15	B315-029-029	LRB24-SR	LRX24-MFT
0.29	0.46	½	15	B315-029-046		
0.29	0.73	½	15	B315-029-073		
0.29	1.16	½	15	B315-029-116		
0.29	1.50	½	15	B315-029-150		
0.46	0.29	½	15	B315-046-029		
0.46	0.46	½	15	B315-046-046		
0.46	0.73	½	15	B315-046-073		
0.46	1.16	½	15	B315-046-116		
0.46	1.50	½	15	B315-046-150		
0.73	0.29	½	15	B315-073-029		
0.73	0.46	½	15	B315-073-046		
0.73	0.73	½	15	B315-073-073		
0.73	1.16	½	15	B315-073-116		
0.73	1.50	½	15	B315-073-150		
1.16	0.29	½	15	B315-116-029		
1.16	0.46	½	15	B315-116-046		
1.16	0.73	½	15	B315-116-073		
1.16	1.16	½	15	B315-116-116		
1.16	1.50	½	15	B315-116-150		
1.50	0.29	½	15	B315-150-029		
1.50	0.46	½	15	B315-150-046		
1.50	0.73	½	15	B315-150-073		
1.50	1.16	½	15	B315-150-116		
1.50	1.50	½	15	B315-150-150		
2.90	2.90	¾	20	B320-290-290		
1.86	1.86	¾	20	B320-186-186		
1.16	1.16	¾	20	B320-116-116		
0.73	0.73	¾	20	B320-073-073		
2.90	1.86	¾	20	B320-290-186		
2.90	1.16	¾	20	B320-290-116		
2.90	0.73	¾	20	B320-290-073		
1.86	1.16	¾	20	B320-186-116		
1.86	0.73	¾	20	B320-186-073		
1.16	0.73	¾	20	B320-116-073		

Mode of Operation
The control valve is operated by an electronic actuator that responds to a proportional VDC/4…20 mA control signal. The actuator will then move the ball of the valve to the position dictated by the contol signal and change the flow.

Product Features
Linear characteristic, complete close-off.

Actuator Specifications

Control type	2-10 VDC multi-function technology (MFT)
Manual override	LR...
Electrical connection	3 ft [1m] cable with ½" conduit fitting

Valve Specifications

Service	chilled or hot water, 60% glycol
Flow characteristic	linear
Controllable flow range Sequence 1 Sequence 2	 (0 to 30° angle)[1] Dead zone 30° to 60° (60° to 90° angle)[2]
Sizes	½" - ¾"
End fitting	NPT
Materials Body Ball Stem Seats Seat O-rings Characterizing disc O-rings	 nickel plated brass chrome plated brass nickel plated brass Teflon® PTFE EPDM chrome plated steel 1/2" (NBR), ¾ (EPDM)
Media temp range	43°F to 122°F (6°C to 50°C)
Body pressure rating	1600kPa (232 psi)
Close off pressure	50 psi
Maximum differential pressure (ΔP)	15 psi
Leakage	bubble tight 0%

067001- 04/13 - Subject to change. © Belimo Aircontrols (USA), Inc.

6-Way Characterized Control Valves, Non-Spring Actuators

6-way Valve with Chrome Plated Ball and Nickel Plated Stem, NPT Female Ends

BELIMO

Valve Specifications

Service	chilled or hot water, 60% glycol
Flow characteristic	linear
Controllable flow range	
Sequence 1	(0 to 30° angle)[1] Dead zone 30° to 60°
Sequence 2	(60° to 90° angle)[2]
Sizes	½" - ¾"
Type of end fitting	NPT
Materials:	
Body	nickel plated brass
Ball	chrome plated brass
Stem	nickel plated brass
Seats	Teflon® PTFE
Seat O-rings	EPDM
Characterizing disc	chrome plated steel
O-rings	(1/2") NBR, (¾") EPDM
Media temp. range	43°F to 122°F (6°C to 50°C)
Body pressure rating	1600kPa (232 psi)
Close off pressure	50 psi
Maximum differential pressure (ΔP)	15 psi
Leakage	bubble tight 0%
C_V rating	see chart below for values

Sequence 1

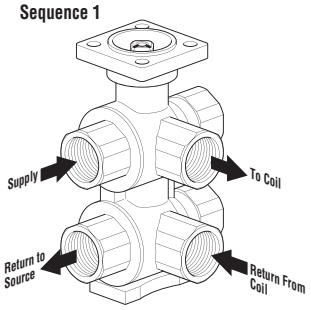

Sequence 2

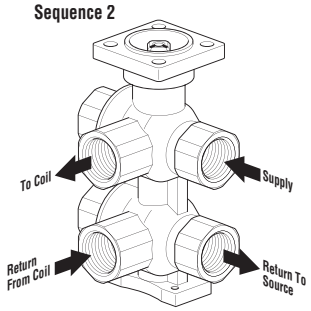

5 YEAR WARRANTY

Non-Spring Return Actuators



ACTUATOR PART #						LRB24-SR	LRX24-MFT
Control type						Proportional	Proportional/MFT
Manual override						•	•
Running time						90 seconds	150 seconds (default) variable (35-150 seconds)
Noise level						<35 dB(A)	<35 dB(A)
ELECTRICAL CONNECTION:							
3 ft. cable, ½" conduit fitting						•	•
6-Way Model #	**Seq 1 Cv**	**Seq 2 Cv**	**Valve Nominal Size Inches**	**DN mm**	**Close-Off psi**		
6-WAY CCV WITH NON-SPRING RETURN ACTUATORS							
B315-029-029	0.29	0.29	½	15	50	$1,059.00	$1,137.00
B315-029-046	0.29	0.46	½	15	50	$1,059.00	$1,137.00
B315-029-073	0.29	0.73	½	15	50	$1,059.00	$1,137.00
B315-029-116	0.29	1.16	½	15	50	$1,059.00	$1,137.00
B315-029-150	0.29	1.50	½	15	50	$1,059.00	$1,137.00
B315-046-029	0.46	0.29	½	15	50	$1,059.00	$1,137.00
B315-046-046	0.46	0.46	½	15	50	$1,059.00	$1,137.00
B315-046-073	0.46	0.73	½	15	50	$1,059.00	$1,137.00
B315-046-116	0.46	1.16	½	15	50	$1,059.00	$1,137.00
B315-046-150	0.46	1.50	½	15	50	$1,059.00	$1,137.00
B315-073-029	0.73	0.29	½	15	50	$1,059.00	$1,137.00
B315-073-046	0.73	0.46	½	15	50	$1,059.00	$1,137.00
B315-073-073	0.73	0.73	½	15	50	$1,059.00	$1,137.00
B315-073-116	0.73	1.16	½	15	50	$1,059.00	$1,137.00
B315-073-150	0.73	1.50	½	15	50	$1,059.00	$1,137.00
B315-116-029	1.16	0.29	½	15	50	$1,059.00	$1,137.00
B315-116-046	1.16	0.46	½	15	50	$1,059.00	$1,137.00
B315-116-073	1.16	0.73	½	15	50	$1,059.00	$1,137.00
B315-116-116	1.16	1.16	½	15	50	$1,059.00	$1,137.00
B315-116-150	1.16	1.50	½	15	50	$1,059.00	$1,137.00
B315-150-029	1.50	0.29	½	15	50	$1,059.00	$1,137.00
B315-150-046	1.50	0.46	½	15	50	$1,059.00	$1,137.00
B315-150-073	1.50	0.73	½	15	50	$1,059.00	$1,137.00
B315-150-116	1.50	1.16	½	15	50	$1,059.00	$1,137.00
B315-150-150	1.50	1.50	½	15	50	$1,059.00	$1,137.00
B320-290-290	2.90	2.90	¾	20	50	$1,288.00	$1,379.00
B320-186-186	1.86	1.86	¾	20	50	$1,288.00	$1,379.00
B320-116-116	1.16	1.16	¾	20	50	$1,288.00	$1,379.00
B320-073-073	0.73	0.73	¾	20	50	$1,288.00	$1,379.00
B320-290-186	2.90	1.86	¾	20	50	$1,288.00	$1,379.00
B320-290-116	2.90	1.16	¾	20	50	$1,288.00	$1,379.00
B320-290-073	2.90	0.73	¾	20	50	$1,288.00	$1,379.00
B320-186-116	1.86	1.16	¾	20	50	$1,288.00	$1,379.00
B320-186-073	1.86	0.73	¾	20	50	$1,288.00	$1,379.00
B320-116-073	1.16	0.73	¾	20	50	$1,288.00	$1,379.00

067001- 04/13 - Subject to change. © Belimo Aircontrols (USA), Inc.

9 CHARACTERIZED CONTROL VALVES (CCV)

- Equal percentage flow characteristic yields a linear heat output.
- Cv values equal to globe valves of the same size requiring no additional system design.
- Valve bodies available with stainless steel trim or chrome plated brass trim depending upon application and cost involved.
- Higher close-off rating ensures shut off.
- 3-way assemblies can be piped for mixing or diverting applications.

Applications

The Characterized Control Valve (CCV) marks a true advancement in control valves. It combines the high close-off capabilities of a ball valve with a specialized disc that ensures an equal percentage flow characteristic. Since its release in 1999, over 5 million CCVs have been sold in hydronic systems. The CCV offers a comprehensive Cv range for various applications such as air handlers, heating and cooling coils, fan coil units, unit ventilators and VAV re-heat coils.





Characterized Control Valve™ Nomenclature

B2	09		LRX	24	-MFT	
Valve B2 = 2-way B3 = 3-way	**Valve Size** 07-80 = ½" to 3"	**Trim Material** B = Chrome Plated Brass Ball, Nickel Plated Stem Blank = Stainless Steel Ball and Stem	**Actuator Type** Non-Spring Return TR… LRB… LRX… NRB... NRX... ARB… ARX… Spring Return TFR… LF… AFR... Electronic Fail-Safe GKR...	**Power Supply** 24 = 24 VAC/DC 120 = 120 VAC* 230 = 230 VAC UP = 24 to 240 VAC	**Control** Blank = On/Off, Floating -3 = Floating Point -SR = 2-10 VDC -MFT = Multi-Function Technology -MFT95 = 0-135 Ω	-S = Built-in Auxiliary Switch -T = Terminal Strip N4 = NEMA 4/4X N4H = NEMA 4/4X with Heater

*LR and AR include 120-240 VAC

Ordering Example

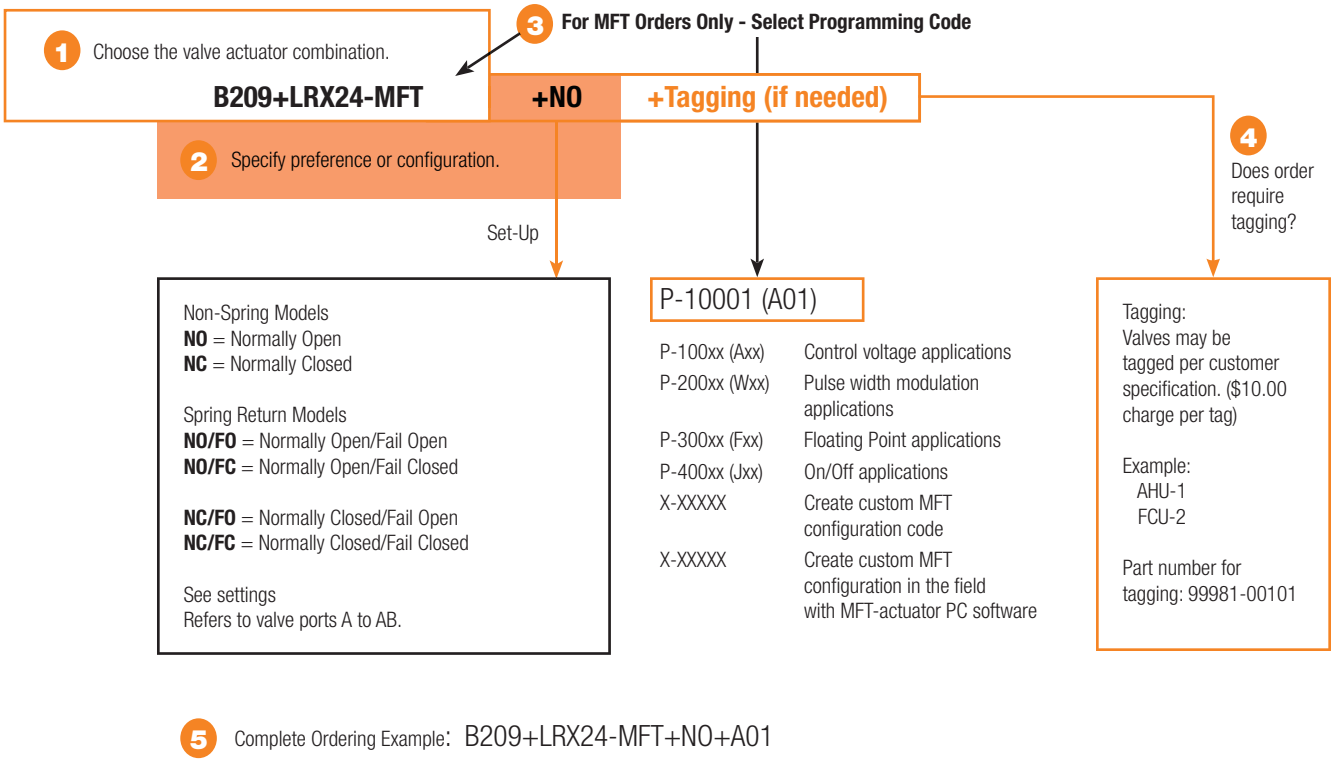

5 Complete Ordering Example: B209+LRX24-MFT+NO+A01

B6 Characterized Control Valve™ Nomenclature

B6	250	S	-070	GRX	24	-MFT
Valve B6 = 2-way Flanged	**Valve Size** 250 = 2½" to 6"	**Trim Material** S = Stainless Steel Ball and Stem	**Cv** 070 = 70 Cv 110 = 110 Cv 186 = 186 Cv 290 = 290 Cv 400 = 400 Cv	**Actuator Type** Non-Spring Return AR… GR… Spring Return AFR… Electronic Fail-Safe GKR...	**Power Supply** 24 = 24 VAC/DC 120 = 120 VAC* 230 = 230 VAC UP = 24 to 240 VAC	**Control** Blank = On/Off, Floating -3 = Floating Point -SR = 2-10 VDC -MFT = Multi-Function Technology -MFT95 = 0-135 Ω

*AR includes 120-240 VAC

Ordering Example

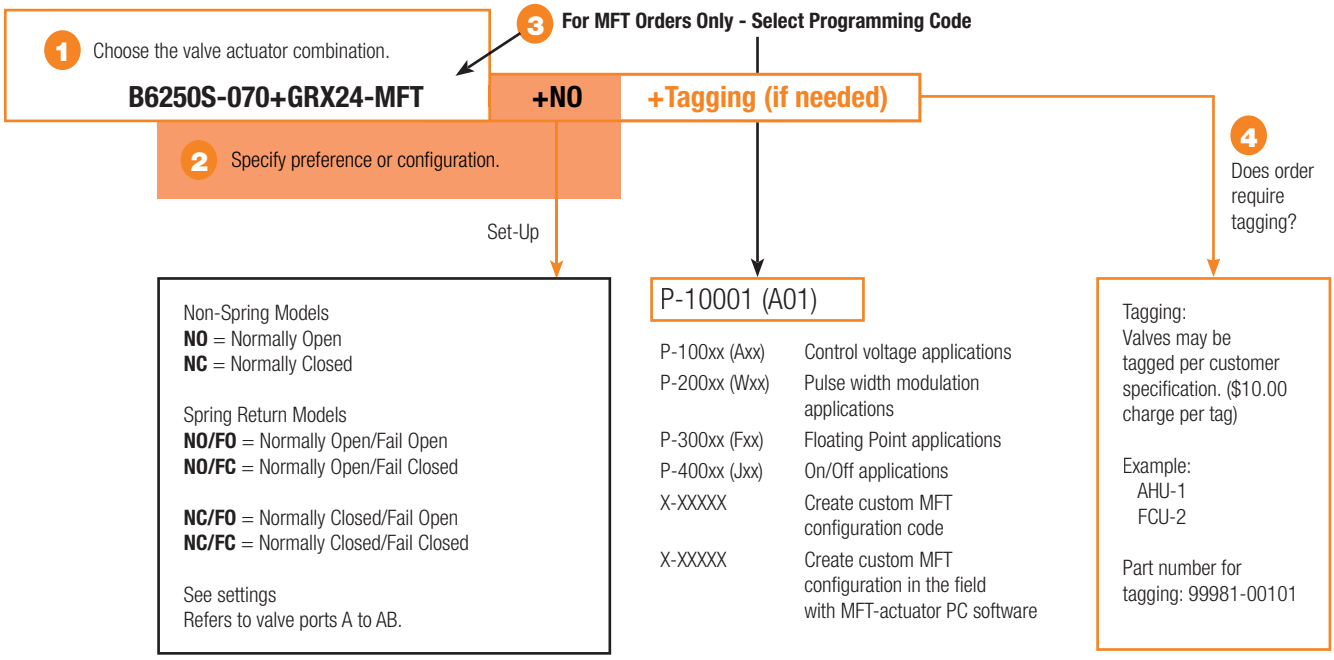

5 Complete Ordering Example: B6250S-070+GRX24-MFT+NO+A01

Control Valve Product Range

Characterized Control Valve Product Range
B2.., B3..

	Valve Nominal Size		Type		Suitable Actuators			
C_V	Inches	DN [mm]	2-way NPT	3-way NPT	Non-Spring Return	Spring Return	NEMA 4	NEMA 4X
0.3	½	15	B207(B)	B307(B)	TR Series	TFR Series		NR Series
0.46	½	15	B208(B)	B308(B)				
0.8	½	15	B209(B)	B309(B)				
1.2	½	15	B210(B)	B310(B)				
1.9	½	15	B211(B)	B311(B)				
3	½	15	B212(B)	B312(B)				
4.7	½	15	B213(B)	B313(B)				
7.4	½	15	B214(B)					
10	½	15	B215(B)	B315(B)				
16	½	15	B216(B)*	B316(B)*				
4.7	¾	20	B217(B)	B317(B)	LR Series	LF Series		
7.4	¾	20	B218(B)	B318(B)				
10	¾	20	B219(B)					
14	¾	20	B220(B)*					
14	¾	20		B320(B)				
24	¾	20	B221(B)*	B321(B)*				
7.4	1	25	B222	B322				
10	1	25	B223	B323				
19	1	25	B224					
30	1	25	B225*	B325*				
10	1¼	32	B229					
19	1¼	32	B230*					
10	1¼	32		B329	AR Series	AFR Series	AFR Series	AR Series
19	1¼	32		B330				
25	1¼	32	B231	B331				
37	1¼	40	B232*					
19	1½	40	B238	B338				
29	1½	40	B239	B339				
37	1½	40	B240*	B340				
46	1½	40		B341				
29	2	50	B248	B347				
37	2	50		B348				
46	2	50	B249	B349				
57	2	50	B250*	B350				
65	2	50	B251					
68	2	50		B351				
83	2	50		B352				
85	2	50	B252					
120	2	50	B253					
240	2	50	B254*					

* Models without characterizing discs. (B) Models with chrome plated brass ball and brass stem



CCV

Equal Percentage Characteristic

Mode of Operation
The Characterized Control Valve is operated by a rotary actuator. The actuators are controlled by a standard voltage for on/off control or a proportional signal or 3-point control system which move the ball of the valve to the position dictated by the control system.

Product Features
The equal-percentage characteristic of the flow is ensured by the integral characterizing disc. This characteristic provides linear heating or cooling output from the coil improving energy efficiency and comfort.

Actuator Specifications

Control type	on/off, floating point, 2-10 VDC, multi-function technology (MFT)
Manual override	TR, LR, AR, NR, AFR series
Electrical connection	3 ft [1m] cable with ½" conduit fitting or covered screw terminal strip

Valve Specifications

Service	chilled or hot water, 60% glycol
Flow characteristic	A-port equal percentage B-port modified for constant common port flow
Controllable flow range	75°
Sizes	½" - 2"
End fitting	NPT female ends
Materials	
Body	forged brass, nickel plated
Ball	stainless steel or chrome plated
Stem	stainless steel or chrome plated
Seats	Teflon® PTFE
Seat O-rings	EPDM
Characterizing disc	
½"- 1 ½" (2-way)	Tefzel®
½"-1" (3-way)	Tefzel®
2" (2-way) B248-B250	Tefzel®
2" (2-way) B251-B254	stainless steel
1¼"- 2" (3-way)	stainless steel
O-rings	EPDM (lubricated)
Media temp range	0°F to 248°F [-18°C to +120°C]
Body pressure rating	
½" - 1¼" (2-way)	600 psi
½" - 1" (3-way)	600 psi
1¼"(B231) - 2"(B251)	400 psi
1¼" - 2" (3-way)	400 psi
Close-off pressure	200 psi
Maximum differential pressure (ΔP)	50 psi
Leakage	0% for A to AB < 2.0% for B to AB
Port ratio	B port: 70% of A to AB C_V

Tefzel® and Teflon® are registered trademarks of DuPont

067001 - 04/13 - Subject to change. © Belimo Aircontrols (USA), Inc.

Control Valve Product Range

Characterized Control Valve Product Range B2..

	Valve Nominal Size		Type	Suitable Actuators		
C_V	Inches	DN [mm]	2-way NPT	Non-Spring Return	Spring Return	NEMA 4X
60	2½	65	B261	AR Series	AFR Series	AR Series
75	2½	65	B262			
110	2½	65	B263			
150	2½	65	B264			
210	2½	65	B265*			
70	3	80	B277			
130	3	80	B278			
170	3	80	B280*			

* Models without characterizing disc



CCV

Equal Percentage Characteristic

Mode of Operation

The Characterized Control Valve is operated by a rotary actuator. The actuators are controlled by a standard voltage for on/off control or a proportional signal or 3-point control system which move the ball of the valve to the position dictated by the control system.

Product Features

The equal-percentage characteristic of the flow is ensured by the integral characterizing disc. This characteristic provides linear heating or cooling output from the coil improving energy efficiency and comfort.

Actuator Specifications

Control type	on/off, floating point, 2-10 VDC, multi-function technology (MFT)
Manual override	AR and AFR series
Electrical connection	3 ft [1m] cable with ½" conduit fitting or covered screw terminal strip

Valve Specifications

Service	chilled or hot water, 60% glycol
Flow characteristic	A-port equal percentage B-port modified for constant common port flow
Controllable flow range	75°
Sizes	2½" - 3"
End fitting	NPT female ends
Materials	
Body	forged brass, nickel plated
Ball	stainless steel
Stem	stainless steel
Seats	Teflon® PTFE
Seat O-rings	EPDM
Characterizing disc	Tefzel®
O-rings	EPDM (lubricated)
Media temp range	0°F to 212°F [-18°C to +100°C]
Body pressure rating	400 psi
Close-off pressure	100 psi
Maximum differential pressure (ΔP)	30 psi
Leakage	0% for A to AB < 2.0% for B to AB

Tefzel® and Teflon® are registered trademarks of DuPont

067001 - 04/13 - Subject to change. © Belimo Aircontrols (USA), Inc.

Control Valve Product Range

Characterized Control Valve Product Range B6..

	Valve Nominal Size		Type	Suitable Actuators		
C_V	Inches	DN [mm]	2-way Flange	Non-Spring Return	Spring Return	Electronic Fail-Safe
70	2½	65	B6250S-070	AR	AFR	
110	2½	65	B6250S-110			
110	3	80	B6300S-110			
186	4	100	B6400S-186	GR		GKR
290	5	125	B6500S-290			
400	6	150	B6600S-400			



CCV

Equal Percentage Characteristic

Mode of Operation

The Characterized Control Valve is operated by a rotary actuator. The actuators are controlled by a standard voltage for on/off control or a proportional signal or 3-point control system which move the ball of the valve to the position dictated by the control system.

Product Features

The equal-percentage characteristic of the flow is ensured by the integral characterizing disc. This characteristic provides linear heating or cooling output from the coil improving energy efficiency and comfort.

Actuator Specifications

Control type	on/off, floating point, 2-10 VDC, multi-function technology (MFT)
Manual override	AR, GR, AFR and GKR series
Electrical connection	3 ft [1m] cable with ½" conduit fitting or covered screw terminal strip

Valve Specifications

Service	chilled or hot water, 60% glycol
Flow characteristic	A-port equal percentage
Controllable flow range	75°
Sizes	2½", 3", 4", 5", 6"
End fitting	ANSI 125 flange pattern
Materials	
Body	cast iron GG25
Ball	stainless steel
Stem	stainless steel
Seats	Teflon® PTFE
Seat O-rings	EPDM rubber
Characterizing disc	stainless steel
O-rings	EPDM (lubricated)
Media temp range	0°F to 248°F [-18°C to +120°C]
Body pressure rating	ANSI 125, class B

°F	Psi
-20° to +150°	200
200°	180
225°	180
250°	175

Close-off pressure	100 psi
Maximum differential pressure (ΔP)	50 psi
Leakage	0% for A to AB

067001 - 04/13 - Subject to change. © Belimo Aircontrols (USA), Inc.

PIPING REDUCTION CHART

Piping Reduction Factor (Fp) - Correction Factor for Valves

Values in chart are corrected C_V ratings for indicated pipe size.

VALVE SIZE				LINE SIZE										
Model #	Inches	DN (mm)	C_V Rating	½"	¾"	1"	1¼"	1½"	2"	2½"	3"	4"	5"	6"
B216*	½	15	16	16	8.7	7								
B221*	¾	20	24		24	19	16.1	14.6						
B225*	1	25	30			30	27.3	24.9	21.9					
B230*	1¼	32	19				19	18.8	18.2	17.9				
B232*	1¼	32	37				37	35.5	31.8	30				
B240*	1½	40	37					37	35	34	33			
B250*	2	50	57						57	56	54	52		
B251	2	50	65						65	65	64	64		
B252	2	50	85						85	81	78	74		
B253	2	50	120						120	107	102	92		
B254*	2	50	240						240	197	182	148		
B261	2½	65	60							60	58	55	54	
B262	2½	65	75							75	73	72	70	
B263	2½	65	110							110	104	100	95	
B264	2½	65	150							150	139	132	122	
B265*	2½	65	210							210	190	175	164	
B277	3	80	70								70	69	68	68
B278	3	80	130								130	119	115	113
B280*	3	80	170								170	148	142	139

* Models without characterizing discs.

NOTE: Please use the corrected C_V values for the valves listed in the chart, when installing them in pipes larger than the line size of the valve. All CCVs not listed do not require piping reduction factors.

NOTE: Values also apply to A-AB flow of 3-way versions.

067001- 04/13- Subject to change. © Belimo Aircontrols (USA), Inc.

BELIMO

SET-UP

		2-WAY VALVE SPECIFY UPON ORDERING		3-WAY VALVE SPECIFY UPON ORDERING	
NON-SPRING RETURN Stays in Last Position	**TR24-3(-T)**	Power to pin 2 will drive valve CCW. Power to pin 3 will drive valve CW.		Power to pin 2 will drive valve CCW. Power to pin 3 will drive valve CW.	
	LRB24-3(-T), ARB24-3(-T)	Power to pin 2 will drive valve CW. Power to pin 3 will drive valve CCW. The above will fuction when the directional switch is in the "1" position to reverse, select the "0" position.		Power to pin 2 will drive valve CW. Power to pin 3 will drive valve CCW. The above will fuction when the directional switch is in the "1" position to reverse, select the "0" position.	
	TR24-SR(-T), LRB24-SR, LRB(X)24-MFT, ARB24-SR, ARB(X)24-MFT	**NC:** Normally closed A to AB, valve will open as voltage increases	**NO:** Normally open A to AB, valve will close as voltage increases	**NC:** Normally closed A to AB, valve will open as voltage increases	**NO:** Normally open A to AB, valve will close as voltage increases
SPRING RETURN Note Fail Position	**TFR24 US, LF24 US, AFRB24**	**NO/FO:** Normally open A to AB, valve will drive closed. Spring Action: Actuator will fail open A to AB upon power loss.	**NC/FC:** Normally closed A to AB, valve will drive open. Spring Action: Actuator will fail closed A to AB upon power loss.	**NO/FO:** Normally open A to AB, valve will drive closed. Spring Action: Actuator will fail open A to AB upon power loss.	**NC/FC:** Normally closed A to AB, valve will drive open. Spring Action: Actuator will fail closed A to AB upon power loss.
	TFR24-3 US, TFR24-SR US, TFR24-MFTUS, LF24-3 US, LF24-SR US, LF24-MFT US, AFRB24-SR, AFRB24-MFT	**NC/FO:** Normally closed A to AB, valve will open as voltage increases. Actuator switch on CW. Spring Action: Will fail open upon power loss.	**NC/FC:** Normally closed A to AB, valve will open as voltage increases. Actuator switch on CW. Spring Action: Will fail closed upon power loss.	**NO/FC:** Normally open A to AB, valve will close as voltage increases. Actuator switch on CW. Spring Action: Will fail closed upon power loss.	**NO/FO:** Normally open A to AB, valve will close as voltage increases. Actuator switch on CW. Spring Action: Will fail open upon power loss.
ELECTRONIC FAIL-SAFE	**GKRB24-3-5-14†**	Power to pin 2 will drive valve CW. Power to pin 3 will drive valve CCW. The above will fuction when the directional switch is in the "1" position to reverse, select the "0" position.		Power to pin 2 will drive valve CW. Power to pin 3 will drive valve CCW. The above will fuction when the directional switch is in the "1" position to reverse, select the "0" position.	
	GKRB24-MFT-5-14†	**NC:** Normally closed A to AB, will open as voltage increases when directional switch is in the “Y2” position.	**NO:** Normally open A to AB, will close as voltage increases when directional switch is in the “Y1” position.	**NC:** Normally closed A to AB, will open as voltage increases when directional switch is in the “Y2” position.	**NO:** Normally open A to AB, will close as voltage increases when directional switch is in the “Y2” position.

† The GK series Electronic Fail-Safe actuator will drive to a predetermined postion using the FO/FC dial on the actuator upon loss of power.

067001 - 04/13 - Subject to change. © Belimo Aircontrols (USA), Inc.

FLOW PATTERNS

2-way Characterized Control Valves™ **(Belimo B2 Series)**

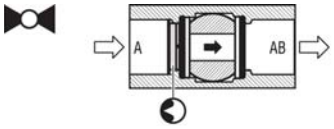

A→AB 100%

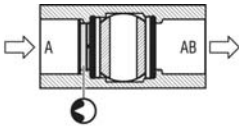

A→AB 0%

Two-way valves should be installed with the disc upstream.

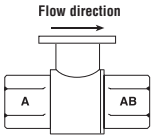

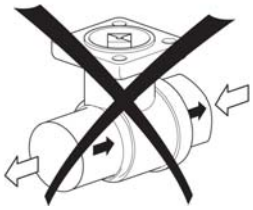

3-way Characterized Control Valves™ **(Belimo B3 Series)**

MIXING

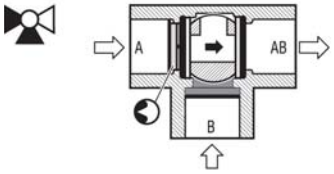

A→AB 100%
B→AB 0%

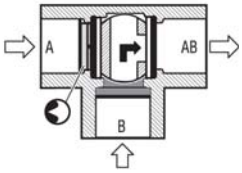

A→AB 0%
B→AB 70%

The A-port must be piped to the coil to maintain proper control.

DIVERTING

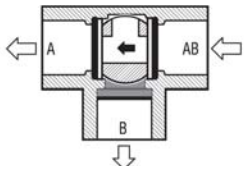

AB→A 100%
AB→B 0%

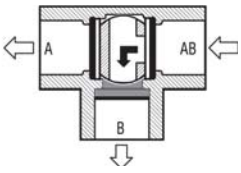

AB→A 0%
AB→B 70%

INCORRECT PIPING

The A-port must be piped to the coil to maintain proper control.

3-way Mixing Valve Piping Diagram
(2 Inputs, 1 Output)

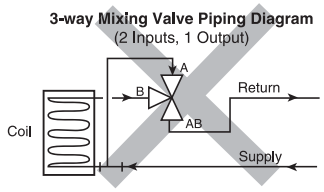

3-way Diverting Valve Piping Diagram
(1 Input, 2 Outputs)

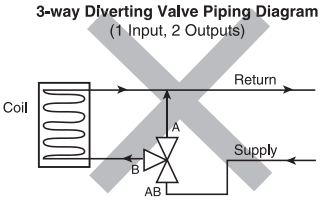

WARNING! Do Not Pipe in this manner!
Note Valve Porting!
The A-port must be piped to the coil! Not the B-port!

Flow is not possible from A to B. If AB-port is not piped as the common port, the valve must be re-piped. It is good practice to install a balancing valve in the bypass line. These valves are intended for closed loop systems. Do not install in an open loop system or in an application that is open to atmospheric pressure.

OPERATION/INSTALLATION – CORRECT PIPING

2-way valves should be installed with the disc upstream. If installed with disc downstream, flow curve will be deeper. If installed "backwards" it is NOT necessary to remove and change. No damage or control problems will occur.

3-WAY VALVES MUST BE PIPED CORRECTLY. They can be mixing or diverting. Mixing is the preferred piping arrangement.

2-way Valve Piping Diagram
(1 Input, 1 Output)

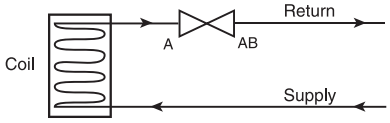

3-way Mixing Valve Piping Diagram
(2 Inputs, 1 Output)

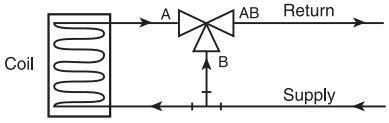

3-way Diverting Valve Piping Diagram
(1 Input, 2 Outputs)

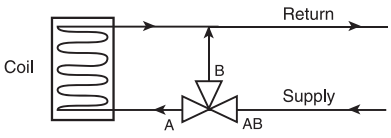

The BELIMO Characterized Control Valve is a CONTROL valve, not a manual valve adapted for actuation. The control port is the A-port. It is similar to the globe valve in that the middle port is the B or bypass port. The common port AB is on the main opposite the A-port. These diagrams are for typical applications only. Consult engineering specification and drawings for particular circumstances.

REDUCED B-PORT FLOW

Note: The B-port flow of the 3-way CCV is lower than that of the A-port. In most applications this is beneficial since the reduced flow compensates for the inexistent pressure drop across the coil in the bypass mode. Therefore, proper sizing is important to avoid flow noise in particular when the system is designed with constant speed pumps. Please refer to our valve sizing and selection guidelines.

The flow velocity in the pipe upstream and downstream of the valve should be considered as well. The typical HVAC design maximum flow is 4 to 8 ft/s to avoid noise issues.

Also, the pipe reduction factor must be considered. Pipe reducers decrease the C_V value of a valve and consequently increase the pressure drop across the valve creating a situation that could lead to noise or a lower than designed flow.

067001- 04/13- Subject to change. © Belimo Aircontrols (USA), Inc.

B2/B3 Series Characterized Control Valve, Non-Spring Return Actuators

2-way and 3-way Valves with Chrome Plated Brass Ball and Brass Stem, NPT Female Ends

Valve Specifications

Service	chilled or hot water, 60% glycol
Flow characteristic	A-port equal percentage B-port modified linear for constant flow
Controllable flow range	75°
Sizes	½", ¾"
End fitting	NPT female ends
Materials:	
Body	forged brass, nickel plated
Ball	chrome plated brass
Stem	nickel plated brass
Seats	Teflon® PTFE
Characterizing disc	TEFZEL®
O-rings	EPDM (lubricated)
Media temp. range	0°F to 248°F [-18°C to +120°C]
Body pressure rating	600 psi
Maximum differential pressure (ΔP)	50 psi
Leakage	0% for A to AB <2.0% for B to AB
C_V rating	A-port: as stated in chart B-port: 70% of A to AB C_V

Visit *www.belimo.us* to see additional non-spring return actuator options including 120V and -S models.

5 YEAR WARRANTY

Non-Spring Return Actuators





ACTUATOR PART #	TR24-3-T US	TR24-3 US	TR24-SR-T US	TR24-SR US	LRB24-3-T	LRB24-3	LRB24-SR-T	LRB24-SR
Control type	On/Off, Floating Point	On/Off, Floating Point	Proportional	Proportional	On/Off, Floating Point	On/Off, Floating Point	Proportional	Proportional
Manual override	•	•	•	•	•	•	•	•
Running time	90 seconds	90 seconds	90 seconds	90 seconds	90 seconds	90 seconds	90 seconds	90 seconds
Actuator noise level	<35 dB(A)	<35 dB(A)	<35 dB(A)	<35 dB(A)	<35 dB(A)	<35 dB(A)	<35 dB(A)	<35 dB(A)
ELECTRICAL CONNECTION:								
½" conduit fitting						•		•
3 ft [1m] cable		•		•		•		•
Covered terminal strip	•		•		•		•	

CCV Model #	C_V Rating	Valve Nominal Size In.	Valve Nominal Size DN (mm)	Close-Off psi							
B2…B 2-WAY CHARACTERIZED CONTROL VALVE WITH NON-SPRING RETURN ACTUATORS											
B207B	0.3	½	15	200	$180.00	$192.00	$270.00	$282.00	$234.00	$248.00	$357.00	$370.00
B208B	0.46	½	15	200	$180.00	$192.00	$270.00	$282.00	$234.00	$248.00	$357.00	$370.00
B209B	0.8	½	15	200	$180.00	$192.00	$270.00	$282.00	$234.00	$248.00	$357.00	$370.00
B210B	1.2	½	15	200	$182.00	$194.00	$272.00	$284.00	$236.00	$250.00	$359.00	$372.00
B211B	1.9	½	15	200	$182.00	$194.00	$272.00	$284.00	$236.00	$250.00	$359.00	$372.00
B212B	3	½	15	200	$186.00	$198.00	$278.00	$290.00	$242.00	$256.00	$368.00	$380.00
B213B	4.7	½	15	200	$188.00	$200.00	$282.00	$294.00	$244.00	$258.00	$372.00	$384.00
B214B	7.4	½	15	200	$192.00	$204.00	$286.00	$300.00	$248.00	$262.00	$376.00	$392.00
B215B	10	½	15	200	$194.00	$206.00	$288.00	$302.00	$250.00	$264.00	$378.00	$394.00
B216B*	16	½	15	200	$196.00	$208.00	$290.00	$304.00	$252.00	$267.00	$380.00	$396.00
B217B	4.7	¾	20	200	$232.00	$246.00	$305.00	$320.00	$286.00	$298.00	$396.00	$409.00
B218B	7.4	¾	20	200	$234.00	$248.00	$310.00	$324.00	$288.00	$300.00	$401.00	$414.00
B219B	10	¾	20	200	$236.00	$250.00	$312.00	$328.00	$290.00	$302.00	$403.00	$416.00
B220B	14	¾	20	200	$239.00	$252.00	$314.00	$330.00	$292.00	$304.00	$405.00	$418.00
B221B*	24	¾	20	200					$295.00	$308.00	$408.00	$421.00
B3…B 3-WAY CHARACTERIZED CONTROL VALVE WITH NON-SPRING RETURN ACTUATORS											
B307B	0.3	½	15	200	$220.00	$234.00	$336.00	$348.00	$275.00	$288.00	$399.00	$411.00
B308B	0.46	½	15	200	$220.00	$234.00	$336.00	$348.00	$275.00	$288.00	$399.00	$411.00
B309B	0.8	½	15	200	$220.00	$234.00	$336.00	$348.00	$275.00	$288.00	$399.00	$411.00
B310B	1.2	½	15	200	$222.00	$236.00	$338.00	$350.00	$277.00	$290.00	$401.00	$414.00
B311B	1.9	½	15	200	$222.00	$236.00	$338.00	$350.00	$277.00	$290.00	$401.00	$414.00
B312B	3	½	15	200	$230.00	$244.00	$344.00	$356.00	$282.00	$294.00	$407.00	$420.00
B313B	4.7	½	15	200	$232.00	$246.00	$348.00	$360.00	$286.00	$298.00	$411.00	$424.00
B315B	10	½	15	200	$234.00	$248.00	$350.00	$362.00	$292.00	$304.00	$414.00	$426.00
B316B*	16	½	15	200	$242.00	$256.00	$361.00	$373.00	$294.00	$306.00	$416.00	$428.00
B317B	4.7	¾	20	200	$286.00	$300.00	$366.00	$382.00	$310.00	$325.00	$433.00	$448.00
B318B	7.4	¾	20	200	$288.00	$302.00	$368.00	$384.00	$316.00	$329.00	$435.00	$450.00
B320B	14	¾	20	200					$320.00	$336.00	$437.00	$452.00
B321B*	24	¾	20	200					$323.00	$339.00	$440.00	$455.00

* Models without characterizing discs.

For corrected C_Vs with piping reduction factor refer to page 9-5.

067001 - 04/13 - Subject to change. © Belimo Aircontrols (USA), Inc.

Valve Specifications

Service	chilled or hot water, 60% glycol
Flow characteristic	A-port equal percentage B-port modified linear for constant flow
Controllable flow range	75°
Sizes	½", ¾"
End fitting	NPT female ends
Materials:	
Body	forged brass, nickel plated
Ball	chrome plated brass
Stem	nickel plated brass
Seats	Teflon® PTFE
Characterizing disc	TEFZEL®
O-rings	EPDM (lubricated)
Media temp. range	0°F to 248°F [-18°C to +120°C]
Body pressure rating	600 psi
Maximum differential pressure (ΔP)	50 psi
Leakage	0% for A to AB <2.0% for B to AB
C_V rating	A-port: as stated in chart B-port: 70% of A to AB C_V

Visit *www.belimo.us* to see additional spring return actuator options including 120V and -S models.

5 YEAR WARRANTY

Spring Return Actuators





ACTUATOR PART #		TFRB24	TFRB24-3	TFRB24-SR	LF24 US	LF24-3 US	LF24-SR US
Control type		On/Off	Floating Point	Proportional	On/Off	Floating Point	Proportional
Running time	Motor	<75 seconds	90 seconds	95 seconds	75 seconds	150 seconds	150 seconds
	Spring	<75 seconds	<25 seconds	<25 seconds	<25 seconds	<25 seconds	<25 seconds
Actuator noise level	Running	<40 dB(A)	<35 dB(A)	<35 dB(A)	<50 dB(A)	<30 dB(A)	<30 dB(A)
	Spring	<40 dB(A)	<62 dB(A)	<62 dB(A)	<62 dB(A)	<62 dB(A)	<62 dB(A)
ELECTRICAL CONNECTION:							
3 ft, cable, ½" conduit fitting		•	•	•	•	•	•

CCV Model #	C_V Rating	Valve Nominal Size Inches	DN (mm)	Close-Off psi						
B2…B 2-WAY CHARACTERIZED CONTROL VALVE WITH SPRING RETURN ACTUATORS										
B207B	0.3	½	15	200	$346.00	$396.00	$424.00	$399.00	$506.00	$522.00
B208B	0.46	½	15	200	$346.00	$396.00	$424.00	$399.00	$506.00	$522.00
B209B	0.8	½	15	200	$346.00	$396.00	$424.00	$399.00	$506.00	$522.00
B210B	1.2	½	15	200	$349.00	$399.00	$426.00	$401.00	$508.00	$524.00
B211B	1.9	½	15	200	$349.00	$399.00	$426.00	$401.00	$508.00	$524.00
B212B	3	½	15	200	$353.00	$401.00	$428.00	$407.00	$515.00	$530.00
B213B	4.7	½	15	200	$355.00	$405.00	$435.00	$409.00	$517.00	$532.00
B214B	7.4	½	15	200	$357.00	$407.00	$437.00	$411.00	$519.00	$534.00
B215B	10	½	15	200	$359.00	$409.00	$439.00	$416.00	$524.00	$536.00
B216B*	16	½	15	200	$361.00	$411.00	$441.00	$418.00	$526.00	$538.00
B217B	4.7	¾	20	200	$399.00	$448.00	$481.00	$456.00	$565.00	$578.00
B218B	7.4	¾	20	200	$401.00	$450.00	$483.00	$458.00	$567.00	$580.00
B219B	10	¾	20	200	$403.00	$452.00	$485.00	$460.00	$569.00	$582.00
B220B	14	¾	20	200	$405.00	$458.00	$487.00	$462.00	$571.00	$584.00
B221B*	24	¾	20	200				$464.00	$573.00	$586.00
B3…B 3-WAY CHARACTERIZED CONTROL VALVE WITH SPRING RETURN ACTUATORS										
B307B	0.3	½	15	200	$409.00	$479.00	$500.00	$473.00	$582.00	$602.00
B308B	0.46	½	15	200	$409.00	$479.00	$500.00	$473.00	$582.00	$602.00
B309B	0.8	½	15	200	$409.00	$479.00	$500.00	$473.00	$582.00	$602.00
B310B	1.2	½	15	200	$411.00	$481.00	$504.00	$475.00	$584.00	$604.00
B311B	1.9	½	15	200	$414.00	$483.00	$504.00	$475.00	$584.00	$604.00
B312B	3	½	15	200	$418.00	$485.00	$506.00	$485.00	$595.00	$615.00
B313B	4.7	½	15	200	$422.00	$489.00	$510.00	$487.00	$597.00	$617.00
B315B	10	½	15	200	$424.00	$491.00	$513.00	$489.00	$599.00	$619.00
B316B*	16	½	15	200	$426.00	$493.00	$515.00	$491.00	$601.00	$621.00
B317B	4.7	¾	20	200	$458.00	$526.00	$548.00	$524.00	$634.00	$654.00
B318B	7.4	¾	20	200	$460.00	$528.00	$550.00	$526.00	$637.00	$656.00
B320B	14	¾	20	200				$530.00	$639.00	$660.00
B321B*	24	¾	20	200				$533.00	$641.00	$663.00

* Models without characterizing discs.

For corrected C_Vs with piping reduction factor refer to page 9-5.

067001- 04/13- Subject to change. © Belimo Aircontrols (USA), Inc.

B2 Series Characterized Control Valve, Non-Spring Return Actuators

2-way Valve with Stainless Steel Ball and Stem, NPT Female Ends

BELIMO

Valve Specifications

Service	chilled or hot water, 60% glycol
Flow characteristic	A-port equal percentage
Controllable flow range	75°
Sizes	½", ¾", 1", 1¼"
End fitting	NPT female ends
Materials:	
Body	forged brass, nickel plated
Ball	stainless steel
Stem	stainless steel
Seats	Teflon® PTFE
Characterizing disc	TEFZEL®
O-rings	EPDM (lubricated)
Media temp. range	0°F to 248°F [-18°C to +120°C]
Body pressure rating	600 psi
Maximum differential pressure (ΔP)	50 psi
Leakage	0% for A to AB
C_V rating	A-port: as stated in chart

Visit *www.belimo.us* to see additional non-spring return actuator options including 120V and -S models.

5 YEAR WARRANTY

Non-Spring Return Actuators





ACTUATOR PART #	TR24-3-T US	TR24-3 US	TR24-SR-T US	TR24-SR US	LRB24-3-T	LRB24-3	LRB24-SR-T	LRB24-SR	LRX24-MFT
Control type	On/Off, Floating Point	On/Off, Floating Point	Proportional	Proportional	On/Off, Floating Point	On/Off, Floating Point	Proportional	Proportional	Proportional/ MFT
Manual override	•	•	•	•	•	•	•	•	•
Running time	90 seconds	90 seconds	90 seconds	90 seconds	90 seconds	90 seconds	90 seconds	90 seconds	150 seconds default / 35 to 200 variable
Actuator noise level	<35 dB(A)	<35 dB(A)	<35 dB(A)	<35 dB(A)	<35 dB(A)	<35 dB(A)	<35 dB(A)	<35 dB(A)	<35 dB(A)
ELECTRICAL CONNECTION:									
½" conduit fitting						•		•	•
3 ft. cable		•		•		•		•	•
Covered terminal strip	•		•		•		•		

CCV Model #	C_V Rating	Valve Nominal Size Inches	DN (mm)	Close-Off psi							
B2… 2-WAY CHARACTERIZED CONTROL VALVE WITH NON-SPRING RETURN ACTUATORS											
B207	0.3	½	15	200	$210.00	$228.00	$320.00	$334.00	$254.00	$267.00	$359.00	$372.00	$487.00
B208	0.46	½	15	200	$210.00	$228.00	$320.00	$334.00	$254.00	$267.00	$359.00	$372.00	$487.00
B209	0.8	½	15	200	$210.00	$228.00	$320.00	$334.00	$254.00	$267.00	$359.00	$372.00	$487.00
B210	1.2	½	15	200	$216.00	$232.00	$322.00	$336.00	$256.00	$269.00	$362.00	$374.00	$491.00
B211	1.9	½	15	200	$216.00	$232.00	$322.00	$336.00	$256.00	$269.00	$362.00	$374.00	$491.00
B212	3	½	15	200	$220.00	$234.00	$324.00	$338.00	$258.00	$271.00	$364.00	$376.00	$496.00
B213	4.7	½	15	200	$224.00	$239.00	$330.00	$342.00	$271.00	$284.00	$368.00	$380.00	$504.00
B214	7.4	½	15	200	$230.00	$244.00	$334.00	$346.00	$277.00	$290.00	$372.00	$384.00	$508.00
B215	10	½	15	200	$232.00	$246.00	$336.00	$348.00	$288.00	$300.00	$376.00	$392.00	$513.00
B216*	16	½	15	200	$278.00	$290.00	$396.00	$408.00	$252.00	$267.00	$380.00	$396.00	$515.00
B217	4.7	¾	20	200	$268.00	$280.00	$352.00	$364.00	$298.00	$314.00	$384.00	$401.00	$524.00
B218	7.4	¾	20	200	$270.00	$282.00	$354.00	$366.00	$300.00	$316.00	$387.00	$403.00	$526.00
B219	10	¾	20	200	$272.00	$284.00	$358.00	$373.00	$302.00	$318.00	$392.00	$405.00	$528.00
B220	14	¾	20	200	$274.00	$286.00	$360.00	$375.00	$304.00	$320.00	$394.00	$407.00	$530.00
B221*	24	¾	20	200					$308.00	$323.00	$397.00	$410.00	$533.00
B222	7.4	1	25	200					$318.00	$331.00	$407.00	$420.00	$559.00
B223	10	1	25	200					$322.00	$338.00	$409.00	$422.00	$565.00
B224	19	1	25	200					$322.00	$338.00	$414.00	$426.00	$574.00
B225*	30	1	25	200					$325.00	$340.00	$416.00	$428.00	$576.00
B229	10	1¼	32	200					$364.00	$376.00	$446.00	$460.00	$597.00
B230*	19	1¼	32	200					$366.00	$378.00	$450.00	$464.00	$599.00

* Models without characterizing discs.

For corrected C_Vs with piping reduction factor refer to page 9-5.

067001 - 04/13 - Subject to change. © Belimo Aircontrols (USA), Inc.

Valve Specifications

Service	chilled or hot water, 60% glycol
Flow characteristic	A-port equal percentage
Controllable flow range	75°
Sizes	1¼", 1½", 2", 2½", 3"
End fitting	NPT female ends
Materials:	
Body	forged brass, nickel plated
Ball	stainless steel
Stem	stainless steel
Seats	Teflon® PTFE
Characterizing disc	TEFZEL® or stainless steel
O-rings	EPDM (lubricated)
Media temp. range	
1¼"-2"	0°F to 248°F [-18°C to +120°C]
2½"-3"	0°F to 212°F [-18°C to +100°C
Body pressure rating	400 psi
Maximum differential pressure (ΔP)	
1¼"-2"	50 psi
2½"-3"	30 psi
Leakage	0% for A to AB
C_V rating	A-port: as stated in chart

Visit *www.belimo.us* to see additional non-spring return actuator options including 120V and -S models.

5 YEAR WARRANTY

Non-Spring Return Actuators



ACTUATOR PART #					ARB24-3	ARB24-SR	ARX24-MFT
Control type					On/Off, Floating Point	Proportional	Proportional/MFT
Manual override					•	•	•
Running time					90 seconds	90 seconds	150 sec. default / 90 to 300 variable
Actuator noise level					<45 dB(A)	<45 dB(A)	<45 dB(A)
ELECTRICAL CONNECTION:							
3 ft. cable, 1/2" conduit fitting					•	•	•
CCV Model #	**C_V Rating**	**Valve Nominal Size Inches**	**DN (mm)**	**Close-Off psi**			
B2... 2-WAY CHARACTERIZED CONTROL VALVE WITH NON-SPRING RETURN ACTUATORS							
B231	25	1¼	32	200	$437.00	$578.00	$628.00
B232*	37	1¼	32	200	$446.00	$582.00	$643.00
B238	19	1½	40	200	$446.00	$590.00	$643.00
B239	29	1½	40	200	$446.00	$592.00	$647.00
B240*	37	1½	40	200	$448.00	$595.00	$649.00
B248	29	2	50	200	$578.00	$716.00	$765.00
B249	46	2	50	200	$580.00	$723.00	$769.00
B250*	57	2	50	200	$582.00	$727.00	$779.00
B251	65	2	50	200	$841.00		$1,052.00
B252	85	2	50	200	$911.00		$1,121.00
B253	120	2	50	200	$979.00		$1,188.00
B254*	240	2	50	200	$1,188.00		$1,404.00
B261	60	2½	65	100	$929.00		$1,139.00
B262	75	2½	65	100	$997.00		$1,207.00
B263	110	2½	65	100	$1,063.00		$1,277.00
B264	150	2½	65	100	$1,135.00		$1,330.00
B265*	210	2½	65	100	$1,275.00		$1,485.00
B277	70	3	80	100	$1,147.00		$1,359.00
B278	130	3	80	100	$1,215.00		$1,427.00
B280*	170	3	80	100	$1,498.00		$1,710.00

* Models without characterizing discs.

For corrected C_Vs with piping reduction factor refer to page 9-5.

067001 - 04/13 - Subject to change. © Belimo Aircontrols (USA), Inc.

B3 Series Characterized Control Valve, Non-Spring Return Actuators

3-way Valve with Stainless Steel Ball and Stem, NPT Female Ends

BELIMO

Valve Specifications	
Service	chilled or hot water, 60% glycol
Flow characteristic	A-port equal percentage B-port modified linear for constant flow
Controllable flow range	75°
Sizes	½", ¾", 1"
End fitting	NPT female ends
Materials:	
Body	forged brass, nickel plated
Ball	stainless steel
Stem	stainless steel
Seats	Teflon® PTFE
Characterizing disc	TEFZEL®
O-rings	EPDM (lubricated)
Media temp. range	0°F to 248°F [-18°C to +120°C]
Body pressure rating	600 psi
Maximum differential pressure (ΔP)	50 psi
Leakage	0% for A to AB <2.0% for B to AB
Port ratio	B port: 70% of A to AB C_V

Visit *www.belimo.us* to see additional non-spring return actuator options including 120V and -S models.

5 YEAR WARRANTY

Non-Spring Return Actuators





ACTUATOR PART #	TR24-3-T US	TR24-3 US	TR24-SR-T US	TR24-SR US	LRB24-3-T	LRB24-3	LRB24-SR-T	LRB24-SR	LRX24-MFT
Control type	On/Off, Floating Point	On/Off, Floating Point	Proportional	Proportional	On/Off, Floating Point	On/Off, Floating Point	Proportional	Proportional	Proportional/ MFT
Manual override	•	•	•	•	•	•	•	•	•
Running time	90 seconds	90 seconds	90 seconds	90 seconds	90 seconds	90 seconds	90 seconds	90 seconds	150 sec. default / 35 to 200 variable
Actuator noise level	<35 dB(A)	<35 dB(A)	<35 dB(A)	<35 dB(A)	<35 dB(A)	<35 dB(A)	<35 dB(A)	<35 dB(A)	<35 dB(A)
ELECTRICAL CONNECTION:									
½" conduit fitting						•		•	•
3 ft, cable		•		•		•		•	•
Covered terminal strip	•		•		•		•		

CCV Model #	C_V Rating	Valve Nominal Size Inches	DN (mm)	Close-Off psi								
B3... 3-WAY CHARACTERIZED CONTROL VALVE WITH NON-SPRING RETURN ACTUATORS												
B307	0.3	½	15	200	$264.00	$276.00	$380.00	$392.00	$310.00	$325.00	$428.00	$442.00	$561.00
B308	0.46	½	15	200	$264.00	$276.00	$380.00	$392.00	$310.00	$325.00	$428.00	$442.00	$561.00
B309	0.8	½	15	200	$264.00	$276.00	$380.00	$392.00	$310.00	$325.00	$428.00	$442.00	$561.00
B310	1.2	½	15	200	$266.00	$278.00	$382.00	$394.00	$314.00	$327.00	$431.00	$446.00	$563.00
B311	1.9	½	15	200	$266.00	$278.00	$382.00	$394.00	$314.00	$327.00	$431.00	$446.00	$563.00
B312	3	½	15	200	$272.00	$284.00	$388.00	$400.00	$320.00	$336.00	$435.00	$450.00	$565.00
B313	4.7	½	15	200	$274.00	$286.00	$392.00	$404.00	$325.00	$340.00	$439.00	$456.00	$576.00
B315	10	½	15	200	$276.00	$288.00	$394.00	$406.00	$329.00	$346.00	$446.00	$460.00	$578.00
B316*	16	½	15	200	$285.00	$297.00	$406.00	$418.00	$331.00	$349.00	$448.00	$462.00	$580.00
B317	4.7	¾	20	200	$330.00	$342.00	$441.00	$456.00	$392.00	$405.00	$481.00	$494.00	$599.00
B318	7.4	¾	20	200	$334.00	$346.00	$443.00	$458.00	$394.00	$407.00	$483.00	$496.00	$602.00
B320	14	¾	20	200					$401.00	$414.00	$487.00	$500.00	$604.00
B321*	24	¾	20	200					$404.00	$417.00	$490.00	$503.00	$607.00
B322	7.4	1	25	200					$424.00	$437.00	$545.00	$561.00	$689.00
B323	10	1	25	200					$426.00	$439.00	$548.00	$563.00	$691.00
B325*	30	1	25	200					$428.00	$442.00	$552.00	$569.00	$695.00

* Models without characterizing discs.

For corrected C_Vs with piping reduction factor refer to page 9-5.

067001 - 04/13 - Subject to change. © Belimo Aircontrols (USA), Inc.

Valve Specifications	
Service	chilled or hot water, 60% glycol
Flow characteristic	A-port equal percentage B-port modified linear for constant flow
Controllable flow range	75°
Sizes	1¼", 1½", 2"
End fitting	NPT female ends
Materials:	
Body	forged brass, nickel plated
Ball	stainless steel
Stem	stainless steel
Seats	Teflon® PTFE
Characterizing disc	stainless steel
O-rings	EPDM (lubricated)
Media temp. range	0°F to 248°F [-18°C to +120°C]
Body pressure rating	400 psi
Maximum differential pressure (ΔP)	50 psi
Leakage	0% for A to AB <2.0% for B to AB
Port ratio	B port: 70% of A to AB C_V

Visit *www.belimo.us* to see additional non-spring return actuator options including 120V and -S models.

5 YEAR WARRANTY

Non-Spring Return Actuators



ACTUATOR PART #					ARB24-3	ARB24-SR	ARX24-MFT
Control type					On/Off, Floating Point	Proportional	Proportional/MFT
Manual override					•	•	•
Running time					90 seconds	90 seconds	150 sec. default / 90 to 300 variable
Actuator noise level					<45 db(A)	<45 dB(A)	<45 dB(A)
ELECTRICAL CONNECTION:							
3 ft, cable, ½" conduit fitting					•	•	•
CCV Model #	**C_V Rating**	**Valve Nominal Size Inches**	**DN (mm)**	**Close-Off psi**			
B3… 3-WAY CHARACTERIZED CONTROL VALVE WITH NON-SPRING RETURN ACTUATORS							
B329	10	1¼	32	200	$510.00	$597.00	$705.00
B330	19	1¼	32	200	$515.00	$602.00	$714.00
B331	25	1¼	32	200	$649.00	$788.00	$841.00
B338	19	1½	40	200	$658.00	$803.00	$865.00
B339	29	1½	40	200	$660.00	$807.00	$868.00
B340	37	1½	40	200	$662.00	$811.00	$872.00
B341	46	1½	40	200	$666.00	$816.00	$876.00
B347	29	2	50	200	$880.00	$1,005.00	$1,061.00
B348	37	2	50	200	$883.00	$1,007.00	$1,063.00
B349	46	2	50	200	$883.00	$1,011.00	$1,063.00
B350	57	2	50	200	$889.00	$1,013.00	$1,065.00
B351	68	2	50	200	$896.00	$1,021.00	$1,071.00
B352	83	2	50	200	$903.00	$1,028.00	$1,077.00

For corrected C_Vs with piping reduction factor refer to page 9-5.

067001- 04/13- Subject to change. © Belimo Aircontrols (USA), Inc.

B2 Series Characterized Control Valve, Spring Return Actuators

2-way Valve with Stainless Steel Ball and Stem, NPT Female Ends

Valve Specifications

Service	chilled or hot water, 60% glycol
Flow characteristic	A-port equal percentage
Controllable flow range	75°
Sizes	½", ¾", 1", 1¼"
End fitting	NPT female ends
Materials:	
Body	forged brass, nickel plated
Ball	stainless steel
Stem	stainless steel
Seats	Teflon® PTFE
Characterizing disc	TEFZEL®
O-rings	EPDM (lubricated)
Media temp. range	0°F to 248°F [-18°C to +120°C]
Body pressure rating	600 psi
Maximum differential pressure (ΔP)	50 psi
Leakage	0% for A to AB
C_V rating	A-port: as stated in chart

Visit *www.belimo.us* to see additional spring return actuator options including 120V and -S models.

5 YEAR WARRANTY

Spring Return Actuators





ACTUATOR PART #		TFRB24	TFRB24-3	TFRB24-SR	TFRX24-MFT	LF24 US	LF24-3 US	LF24-SR US	LF24-MFT US
Control type		On/Off	Floating Point	Proportional	Proportional/ MFT	On/Off	Floating Point	Proportional	Proportional/ MFT
Running time	Motor	<75 seconds	90 seconds	95 seconds	150 seconds default / 75 to 300 variable	75 seconds	150 seconds	150 seconds	150 sec. default / 75 to 300 variable
	Spring	<75 seconds	<25 seconds	<25 seconds	<25 seconds	<25 seconds	<25 seconds	<25 seconds	<25 seconds
Actuator noise level	Running	<40 dB(A)	<35 dB(A)	<35 dB(A)	<35 dB(A)	<50 dB(A)	<30 dB(A)	<30 dB(A)	<30 dB(A)
	Spring	<40 dB(A)	<62 dB(A)	<62 dB(A)	<62 dB(A)	<62 dB (A)	<62 dB (A)	<62 dB (A)	<62 dB (A)
ELECTRICAL CONNECTION:									
3 ft, cable, ½" conduit fitting		•	•	•	•	•	•	•	•
CCV Model #	**C_V Rating**	**Valve Nominal Size Inches**	**DN (mm)**	**Close-Off psi**					
B2… 2-WAY CHARACTERIZED CONTROL VALVE WITH SPRING RETURN ACTUATORS									
B207	0.3	½	15	200	$359.00	$409.00	$439.00	$517.00	$418.00	$524.00	$541.00	$625.00
B208	0.46	½	15	200	$359.00	$409.00	$439.00	$517.00	$418.00	$524.00	$541.00	$625.00
B209	0.8	½	15	200	$359.00	$409.00	$439.00	$517.00	$418.00	$524.00	$541.00	$625.00
B210	1.2	½	15	200	$362.00	$414.00	$442.00	$519.00	$420.00	$526.00	$543.00	$630.00
B211	1.9	½	15	200	$362.00	$414.00	$442.00	$519.00	$420.00	$526.00	$543.00	$630.00
B212	3	½	15	200	$370.00	$418.00	$448.00	$524.00	$426.00	$532.00	$550.00	$639.00
B213	4.7	½	15	200	$372.00	$420.00	$450.00	$526.00	$428.00	$534.00	$552.00	$645.00
B214	7.4	½	15	200	$374.00	$422.00	$452.00	$528.00	$431.00	$536.00	$555.00	$656.00
B215	10	½	15	200	$376.00	$424.00	$456.00	$530.00	$428.00	$538.00	$557.00	$662.00
B216*	16	½	15	200	$378.00	$426.00	$458.00	$532.00	$418.00	$526.00	$538.00	$664.00
B217	4.7	¾	20	200	$414.00	$462.00	$496.00	$559.00	$470.00	$578.00	$590.00	$674.00
B218	7.4	¾	20	200	$416.00	$464.00	$498.00	$561.00	$473.00	$580.00	$592.00	$677.00
B219	10	¾	20	200	$418.00	$467.00	$500.00	$563.00	$475.00	$582.00	$595.00	$679.00
B220	14	¾	20	200	$420.00	$475.00	$502.00	$565.00	$477.00	$584.00	$597.00	$682.00
B221*	24	¾	20	200					$480.00	$587.00	$600.00	$685.00
B222	7.4	1	25	200					$485.00	$588.00	$602.00	$697.00
B223	10	1	25	200					$491.00	$597.00	$612.00	$699.00
B224	19	1	25	200					$500.00	$604.00	$619.00	$701.00
B225*	30	1	25	200					$506.00	$615.00	$628.00	$703.00
B229	10	1¼	32	200					$515.00	$630.00	$643.00	$723.00
B230*	19	1¼	32	200					$517.00	$634.00	$645.00	$725.00

* Models without characterizing discs.

For corrected C_Vs with piping reduction factor refer to page 9-5.

067001 - 04/13 - Subject to change. © Belimo Aircontrols (USA), Inc.

Valve Specifications

Service	chilled or hot water, 60% glycol
Flow characteristic	A-port equal percentage
Controllable flow range	75°
Sizes	1¼", 1½", 2", 2½", 3"
End fitting	NPT female ends
Materials:	
Body	forged brass, nickel plated
Ball	stainless steel
Stem	stainless steel
Seats	Teflon® PTFE
Characterizing disc	TEFZEL® or stainless steel
O-rings	EPDM (lubricated)
Media temp. range	
1¼"-2"	0°F to 248°F [-18°C to +120°C]
2½"-3"	0°F to 212°F [-18°C to +100°C]
Body pressure rating	400 psi
Maximum differential pressure (ΔP)	
1¼"-2"	50 psi
2½"-3"	30 psi
Leakage	0% for A to AB
C_V rating	A-port: as stated in chart

Visit *www.belimo.us* to see additional spring return actuator options including 120V and -S models.

5 YEAR WARRANTY

Spring Return Actuators



ACTUATOR PART #		AFRB24	AFRB24-SR	AFRX24-MFT
Control type		On/Off	Proportional	Proportional/MFT
Manual override		•	•	•
Running time	Motor	75 seconds	90 seconds	150 seconds default / 70 to 220 variable
	Spring	<20 seconds	<20 seconds	<20 seconds
Actuator noise level	Running	<50 dB(A)	<40 dB(A)	<45 dB(A)
	Spring	<62 dB(A)	<62 dB(A)	<62 dB(A)
ELECTRICAL CONNECTION:				
3 ft, cable, ½" conduit fitting		•	•	•

CCV Model #	C_V Rating	Valve Nominal Size Inches	DN (mm)	Close-Off psi			
B2... 2-WAY CHARACTERIZED CONTROL VALVE WITH SPRING RETURN ACTUATORS							
B231	25	1¼	32	200	$597.00	$740.00	$849.00
B232*	37	1¼	32	200	$599.00	$743.00	$851.00
B238	19	1½	40	200	$603.00	$749.00	$855.00
B239	29	1½	40	200	$605.00	$754.00	$857.00
B240*	37	1½	40	200	$607.00	$759.00	$859.00
B248	29	2	50	200	$841.00	$1,010.00	$1,061.00
B249	46	2	50	200	$851.00	$1,017.00	$1,069.00
B250*	57	2	50	200	$859.00	$1,023.00	$1,073.00
B251	65	2	50	200	$1,048.00		$1,188.00
B252	85	2	50	200	$1,116.00		$1,261.00
B253	120	2	50	200	$1,182.00		$1,328.00
B254*	240	2	50	200	$1,186.00		$1,329.00
B261	60	2½	65	100	$1,189.00		$1,328.00
B262	75	2½	65	100	$1,244.00		$1,349.00
B263	110	2½	65	100	$1,307.00		$1,416.00
B264	150	2½	65	100	$1,338.00		$1,489.00
B265*	210	2½	65	100	$1,482.00		$1,626.00
B277	70	3	80	100	$1,353.00		$1,502.00
B278	130	3	80	100	$1,424.00		$1,567.00
B280*	170	3	80	100	$1,702.00		$1,848.00

* Models without characterizing discs.

For corrected Cvs with piping reduction factor refer to page 9-5.

067001 - 04/13 - Subject to change. © Belimo Aircontrols (USA), Inc.

B3 Series Characterized Control Valve, Spring Return Actuators

3-way Valve with Stainless Steel Ball and Stem, NPT Female Ends

Valve Specifications

Service	chilled or hot water, 60% glycol
Flow characteristic	A port equal percentage B port modified linear for constant flow
Controllable flow range	75°
Sizes	½", ¾", 1"
End fitting	NPT female ends
Materials:	
Body	forged brass, nickel plated
Ball	stainless steel
Stem	stainless steel
Seats	Teflon® PTFE
Characterizing disc	TEFZEL® or stainless steel
O-rings	EPDM (lubricated)
Media temp. range	0°F to 248°F [-18°C to +120°C]
Body pressure rating	600 psi
Maximum differential pressure (ΔP)	50 psi
Leakage	0% for A to AB <2.0% for B to AB
C_V rating	A-port: as stated in chart B-port: 70% of A to AB C_V

Visit *www.belimo.us* to see additional spring return actuator options including 120V and -S models.

5 YEAR WARRANTY

Spring Return Actuators





ACTUATOR PART #		TFRB24	TFRB24-3	TFRB24-SR	TFRX24-MFT	LF24 US	LF24-3 US	LF24-SR US	LF24-MFT US
Control type		On/Off	Floating Point	Proportional	Proportional/ MFT	On/Off	Floating Point	Proportional	Proportional/ MFT
Running time	Motor	<75 seconds	90 seconds	95 seconds	150 seconds default / 75 to 300 variable	75 seconds	150 seconds	150 seconds	150 seconds default / 75 to 300 variable
	Spring	<75 seconds	<25 seconds	<25 seconds	<25 seconds	<25 seconds	<25 seconds	<25 seconds	<25 seconds
Actuator noise level	Running	<40 dB(A)	<35 dB(A)	<35 dB(A)	<35 dB(A)	<50 dB(A)	<30 dB(A)	<30 dB(A)	<30 dB(A)
	Spring	<40 dB(A)	<62 dB(A)	<62 dB(A)	<62 dB(A)	<62 dB (A)	<62 dB (A)	<62 dB (A)	<62 dB (A)
ELECTRICAL CONNECTION:									
3 ft, cable, ½ " conduit fitting		•	•	•	•	•	•	•	•

CCV Model #	C_V Rating	Valve Nominal Size Inches	DN (mm)	Close-Off psi							
B3… 3-WAY CHARACTERIZED CONTROL VALVE WITH SPRING RETURN ACTUATORS											
B307	0.3	½	15	200	$433.00	$502.00	$513.00	$590.00	$489.00	$599.00	$630.00	$689.00
B308	0.46	½	15	200	$433.00	$502.00	$513.00	$590.00	$489.00	$599.00	$630.00	$689.00
B309	0.8	½	15	200	$433.00	$502.00	$513.00	$590.00	$489.00	$599.00	$630.00	$689.00
B310	1.2	½	15	200	$435.00	$504.00	$515.00	$592.00	$491.00	$602.00	$632.00	$693.00
B311	1.9	½	15	200	$439.00	$506.00	$517.00	$595.00	$491.00	$602.00	$632.00	$693.00
B312	3	½	15	200	$446.00	$508.00	$522.00	$599.00	$502.00	$612.00	$643.00	$705.00
B313	4.7	½	15	200	$448.00	$513.00	$526.00	$601.00	$504.00	$615.00	$645.00	$710.00
B315	10	½	15	200	$450.00	$515.00	$528.00	$606.00	$506.00	$617.00	$649.00	$721.00
B316*	16	½	15	200	$452.00	$517.00	$530.00	$608.00	$508.00	$619.00	$651.00	$723.00
B317	4.7	¾	20	200	$489.00	$561.00	$569.00	$643.00	$536.00	$645.00	$666.00	$736.00
B318	7.4	¾	20	200	$491.00	$563.00	$574.00	$647.00	$545.00	$651.00	$639.00	$740.00
B320	14	¾	20	200					$552.00	$662.00	$641.00	$744.00
B321*	24	¾	20	200					$533.00	$641.00	$663.00	$747.00
B322	7.4	1	25	200					$569.00	$682.00	$697.00	$765.00
B323	10	1	25	200					$576.00	$684.00	$699.00	$767.00
B325*	30	1	25	200					$580.00	$687.00	$701.00	$769.00

*Models without characterizing discs.

For corrected C_Vs with piping reduction factor refer to page 9-5.

067001 - 04/13 - Subject to change. © Belimo Aircontrols (USA), Inc.

Valve Specifications

Service	chilled or hot water, 60% glycol
Flow characteristic	A port equal percentage B port modified linear for constant flow
Controllable flow range	75°
Sizes	1¼", 1½", 2"
End fitting	NPT female ends
Materials:	
Body	forged brass, nickel plated
Ball	stainless steel
Stem	stainless steel
Seats	Teflon® PTFE
Characterizing disc	stainless steel
O-rings	EPDM (lubricated)
Media temp. range	0°F to 248°F [-18°C to +120°C]
Body pressure rating	400 psi
Maximum differential pressure (ΔP)	50 psi
Leakage	0% for A to AB <2.0% for B to AB
C_V rating	A-port: as stated in chart B-port: 70% of A to AB C_V

Visit *www.belimo.us* to see additional spring return actuator options including 120V and -S models.

5 YEAR WARRANTY

Spring Return Actuators



ACTUATOR PART #		AFRB24	AFRB24-SR	AFRX24-MFT
Control type		On/Off	Proportional	Proportional/MFT
Manual override		•	•	•
Running time	Motor	75 seconds	90 seconds	150 seconds default / 75 to 300 variable
	Spring	<20 seconds	<20 seconds	<20 seconds
Actuator noise level	Running	<45 dB(A)	<45 dB(A)	<45 dB(A)
	Spring	<62 dB(A)	<62 dB(A)	<62 dB(A)
ELECTRICAL CONNECTION:				
3 ft, cable, ½ " conduit fitting		•	•	•

CCV Model #	C_V Rating	Valve Nominal Size Inches	DN (mm)	Close-Off psi			
B3... 3-WAY CHARACTERIZED CONTROL VALVE WITH SPRING RETURN ACTUATORS							
B329	10	1¼	32	200	$680.00	$814.00	$847.00
B330	19	1¼	32	200	$686.00	$818.00	$851.00
B331	25	1¼	32	200	$829.00	$982.00	$1,052.00
B338	19	1½	40	200	$843.00	$997.00	$1,055.00
B339	29	1½	40	200	$845.00	$1,017.00	$1,057.00
B340	37	1½	40	200	$851.00	$1,022.00	$1,059.00
B341	46	1½	40	200	$1,014.00	$1,198.00	$1,233.00
B347	29	2	50	200	$1,195.00	$1,359.00	$1,397.00
B348	37	2	50	200	$1,198.00	$1,361.00	$1,400.00
B349	46	2	50	200	$1,200.00	$1,363.00	$1,402.00
B350	57	2	50	200	$1,205.00	$1,374.00	$1,407.00
B351	68	2	50	200	$1,376.00	$1,589.00	$1,626.00
B352	83	2	50	200	$1,436.00	$1,647.00	$1,685.00

For corrected C_Vs with piping reduction factor refer to page 9-5.

067001 - 04/13 - Subject to change. © Belimo Aircontrols (USA), Inc.

B6 Series Flanged CCV, Non-Spring Return Actuators

2-way Valve with Stainless Steel Ball and Stem, Flanged Ends

Valve Specifications

Service	chilled or hot water, 60% glycol
Flow characteristic	A-port equal percentage
Controllable flow range	75°
Sizes	2½", 3", 4", 5", 6"
End fitting	ANSI 125 flange pattern
Materials:	
Body	cast iron - GG25
Ball	stainless steel
Stem	stainless steel
Seats	Teflon® PTFE
Characterizing disc	stainless steel
O-rings	EPDM (lubricated)
Media temp. range	0°F to 248°F [-18°C to +120°C]
Body pressure rating	According to ANSI 125, standard class B
Maximum differential pressure (ΔP)	50 psi
Leakage	0% for A to AB

Visit *www.belimo.us* to see additional non-spring return actuator options including 120V and -S models.

5 YEAR WARRANTY

Non-Spring Return Actuators





ACTUATOR PART #					ARB24-3-5-14	ARX24-MFT-5-14	GRB24-3-5-14	GRX24-MFT-5-14
Control type					On/Off, Floating Point	Proportional/MFT	On/Off, Floating Point	Proportional/MFT
Manual override					•	•	•	•
Running time					90 seconds	150 seconds default / 90 to 150 variable	150 seconds	150 seconds
Actuator noise level					<45 dB(A)	<45 dB(A)	<45 dB(A)	<45 dB(A)
ELECTRICAL CONNECTION:								
3 ft, cable, ½" conduit fitting					•	•	•	•
CCV Model #	**C_V Rating**	**Valve Nominal Size Inches**	**DN (mm)**	**Close-Off psi**				
B6…S 2-WAY CHARACTERIZED CONTROL VALVE WITH NON-SPRING RETURN ACTUATORS								
B6250S-070	70	2½	65	100	$1,718.00	$1,876.00		
B6250S-110	110	2½	65	100	$1,794.00	$1,936.00		
B6300S-110	110	3	80	100	$1,881.00	$2,102.00		
B6400S-186	186	4	100	100			$2,175.00	$2,333.00
B6500S-290	290	5	125	100			$3,153.00	$3,237.00
B6600S-400	400	6	150	100			$4,004.00	$4,090.00

Example: ARX24-MFT is the basic model. Add the P… pre-set MFT configuration number and list price to the actuator when ordering, as needed.
Note: Most popular configurations available at no additional cost. All other configurations carry a $34.00 list price.

067001 - 04/13 - Subject to change. © Belimo Aircontrols (USA), Inc.

Valve Specifications

Service	chilled or hot water, 60% glycol
Flow characteristic	A-port equal percentage
Controllable flow range	75°
Sizes	2½", 3", 4", 5", 6"
End fitting	ANSI 125 flange pattern
Materials:	
Body	cast iron - GG25
Ball	stainless steel
Stem	stainless steel
Seats	Teflon® PTFE
Characterizing disc	stainless steel
O-rings	EPDM (lubricated)
Media temp. range	0°F to 248°F [-18°C to +120°C]
Body pressure rating	According to ANSI 125, standard class B
Maximum differential pressure (ΔP)	50 psi
Leakage	0% for A to AB

5 YEAR WARRANTY

	Spring Return Actuators		Electronic Fail-Safe Actuators	
				
ACTUATOR PART #	**AFRB24-5-14**	**AFRX24-MFT-5-14**	**GKRB24-3-5-14**	**GKRX24-MFT-5-14**
Control type	On/Off	Proportional/MFT	On/Off, Floating Point	Proportional/MFT
Manual override	•	•	•	•
Running time – Motor	75 seconds	150 seconds default / 70 to 220 variable	150 seconds default / 90 to 150 variable	150 seconds default / 90 to 150 variable
Running time – Fail-Safe	<20 seconds	<20 seconds	35 seconds	35 seconds
Actuator noise level – Running	<45 dB(A)	<45 dB(A)	<45 dB(A)	<45 dB(A)
Actuator noise level – Spring	62 dB(A)	62 dB(A)		
ELECTRICAL CONNECTION:				
3 ft, cable, ½" conduit fitting	•	•	•	•

CCV Model #	C_V Rating	Valve Nominal Size Inches	DN (mm)	Close-Off psi				
B6…S 2-WAY CHARACTERIZED CONTROL VALVE WITH SPRING RETURN AND ELECTRONIC FAIL-SAFE ACTUATORS								
B6250S-070	70	2½	65	100	$1,751.00	$1,971.00		
B6250S-110	110	2½	65	100	$1,831.00	$2,043.00		
B6300S-110	110	3	80	100	$1,977.00	$2,250.00		
B6400S-186	186	4	100	100			$2,450.00	$2,627.00
B6500S-290	290	5	125	100			$3,490.00	$3,620.00
B6600S-400	400	6	150	100			$4,341.00	$4,473.00

Example: AFRX24-MFT is the basic model. Add the P… pre-set MFT configuration number and list price to the actuator when ordering, as needed.
Note: Most popular configurations available at no additional cost. All other configurations carry a $34.00 list price.

067001 - 04/13 - Subject to change. © Belimo Aircontrols (USA), Inc.

B2 Series Characterized Control Valve, NEMA 4X Non-Spring Return Actuators

2-way Valve with Stainless Steel Ball and Stem, NPT Female Ends

BELIMO

CCV

Valve Specifications

Service	chilled or hot water, 60% glycol
Flow characteristic	A-port equal percentage
Controllable flow range	75°
Sizes	½", ¾", 1", 1¼", 1 ½", 2", 2½", 3"
End fitting	NPT female ends
Materials:	
Body	forged brass, nickel plated
Ball	stainless steel
Stem	stainless steel
Seats	Teflon® PTFE
Characterizing disc	TEFZEL® or stainless steel
O-rings	EPDM (lubricated)
Media temp. range	
1½"-2"	0°F to 248°F [-18°C to +120°C]
2½"-3"	0°F to 212°F [-18°C to +100°C]
Body pressure rating	
½" - 1¼" (B230)	600 psi
1¼" (B231) - 3"	400 psi
Maximum differential pressure (ΔP)	50 psi (1½"-2") 30 psi (2½"-3")
Leakage	0% for A to AB

5 YEAR WARRANTY

NEMA 4X Non-Spring Return Actuators





*Models without characterizing discs.

For corrected C_{VS} with piping reduction factor refer to page 9-5.

ACTUATOR PART #					NRX24-3-T N4	NRX24-SR-T N4	NRX24-MFT-T N4	ARX24-3-T N4	ARX24-SR-T N4	ARX24-MFT-T N4
Control type					On/Off, Floating Point	Proportional	Proportional/MFT	On/Off, Floating Point	Proportional	Proportional/MFT
Manual override					•	•	•	•	•	•
Running time					90 seconds	90 seconds	150 seconds default / 60 to 200 variable	90 seconds	90 seconds	150 seconds default / 60 to 200 variable
Actuator noise level					<45 dB(A)	<45 dB(A)	<45 dB(A)	<45 dB(A)	<45 dB(A)	<45 dB(A)
Built-in heater					•	•	•	•	•	•
ELECTRICAL CONNECTION:										
Terminal strip					•	•	•	•	•	•
CCV Model #	**C_V Rating**	**Valve Nominal Size Inches**	**DN (mm)**	**Close-Off psi**						
B2... 2-WAY CHARACTERIZED CONTROL VALVE WITH NON-SPRING RETURN ACTUATORS										
B207	0.3	½	15	200	$559.00	$662.00	$779.00			
B208	0.46	½	15	200	$559.00	$662.00	$779.00			
B209	0.8	½	15	200	$559.00	$662.00	$779.00			
B210	1.2	½	15	200	$561.00	$664.00	$783.00			
B211	1.9	½	15	200	$561.00	$664.00	$783.00			
B212	3	½	15	200	$561.00	$664.00	$783.00			
B213	4.7	½	15	200	$565.00	$670.00	$788.00			
B214	7.4	½	15	200	$571.00	$677.00	$794.00			
B215	10	½	15	200	$576.00	$682.00	$798.00			
B216*	16	½	15	200	$578.00	$684.00	$801.00			
B217	4.7	¾	20	200	$608.00	$695.00	$818.00			
B218	7.4	¾	20	200	$610.00	$697.00	$820.00			
B219	10	¾	20	200	$612.00	$699.00	$822.00			
B220	14	¾	20	200	$617.00	$703.00	$826.00			
B221*	24	¾	20	200	$620.00	$706.00	$829.00			
B222	7.4	1	25	200	$625.00	$714.00	$851.00			
B223	10	1	25	200	$630.00	$716.00	$857.00			
B224	19	1	25	200	$630.00	$721.00	$863.00			
B225*	30	1	25	200	$634.00	$725.00	$868.00			
B229	10	1¼	32	200	$668.00	$750.00	$889.00			
B230*	19	1¼	32	200	$670.00	$754.00	$891.00			
B231	25	1¼	32	200				$729.00	$865.00	$917.00
B232*	37	1¼	32	200				$731.00	$868.00	$923.00
B238	19	1½	40	200				$738.00	$880.00	$937.00
B239	29	1½	40	200				$738.00	$880.00	$937.00
B240*	37	1½	40	200				$742.00	$885.00	$927.00
B248	29	2	50	200				$763.00	$887.00	$943.00
B249	46	2	50	200				$868.00	$1,009.00	$1,059.00
B250*	57	2	50	200				$870.00	$1,013.00	$1,063.00
B251	65	2	50	200				$872.00	$1,021.00	$1,071.00
B252	85	2	50	200				$1,135.00	$1,279.00	$1,344.00
B253	120	2	50	200				$1,201.00	$1,349.00	$1,413.00
B254*	240	2	50	200				$1,273.00	$1,418.00	$1,483.00
B261	60	2½	65	100				$1,285.00	$1,431.00	$1,498.00
B262	75	2½	65	100				$1,287.00	$1,433.00	$1,500.00
B263	110	2½	65	100				$1,289.00	$1,435.00	$1,502.00
B264	150	2½	65	100				$1,357.00	$1,502.00	$1,569.00
B265*	210	2½	65	100				$1,424.00	$1,571.00	$1,624.00
B277	70	3	80	100				$1,439.00	$1,587.00	$1,649.00
B278	130	3	80	100				$1,509.00	$1,653.00	$1,721.00
B280*	170	3	80	100				$1,567.00	$1,714.00	$1,777.00

ACTUATOR PART #	NRX24-3-T N4H	NRX24-SR-T N4H	NRX24-MFT-T N4H	ARX24-3-T N4H	ARX24-SR-T N4H	ARX24-MFT-T N4H
Add to List Price for heater	+$358.00	+$358.00	+$358.00	+$358.00	+$358.00	+$358.00

067001 - 04/13 - Subject to change. © Belimo Aircontrols (USA), Inc.

B3 Series Characterized Control Valve, NEMA 4X Non-Spring Return Actuators

3-way Valve with Stainless Steel Ball and Stem, NPT Female Ends

5 YEAR WARRANTY

Valve Specifications

Service	chilled or hot water, 60% glycol
Flow characteristic	A-port equal percentage B-port modified linear for constant flow
Controllable flow range	75°
Sizes	½", ¾", 1", 1¼", 1 ½", 2"
End fitting	NPT female ends
Materials:	
Body	forged brass, nickel plated
Ball	stainless steel
Stem	stainless steel
Seats	Teflon® PTFE
Characterizing disc	TEFZEL® or stainless steel
O-rings	EPDM (lubricated)
Media temp. range	0°F to 248°F [-18°C to +120°C]
Body pressure rating	
½" - 1"	600 psi
1¼" - 2"	400 psi
Maximum differential pressure (ΔP)	50 psi
Leakage	0% for A to AB <2.0% for B to AB
Port ratio	B-port: 70% of A to AB C_V

NEMA 4X Non-Spring Return Actuators





ACTUATOR PART #					NRX24-3-T N4	NRX24-SR-T N4	NRX24-MFT-T N4	ARX24-3-T N4	ARX24-SR-T N4	ARX24-MFT-T N4
Control type					On/Off, Floating Point	Proportional	Proportional/MFT	On/Off, Floating Point	Proportional	Proportional/MFT
Manual override					•	•	•	•	•	•
Running time					90 seconds	90 seconds	150 seconds default / 60 to 200 variable	90 seconds	90 seconds	150 seconds default / 60 to 200 variable
Actuator noise level					<45 dB(A)	<45 dB(A)	<45 dB(A)	<45 dB(A)	<45 dB(A)	<45 dB(A)
Built-in heater					•	•	•	•	•	•
ELECTRICAL CONNECTION:										
Terminal strip					•	•	•	•	•	•
CCV Model #	**C_V Rating**	**Valve Nominal Size Inches**	**DN (mm)**	**Close-Off psi**						
B3... 3-WAY CHARACTERIZED CONTROL VALVE WITH NON-SPRING RETURN ACTUATORS										
B307	0.3	½	15	200	$604.00	$723.00	$853.00			
B308	0.46	½	15	200	$604.00	$723.00	$853.00			
B309	0.8	½	15	200	$604.00	$723.00	$853.00			
B310	1.2	½	15	200	$606.00	$725.00	$855.00			
B311	1.9	½	15	200	$606.00	$725.00	$855.00			
B312	3	½	15	200	$608.00	$727.00	$857.00			
B313	4.7	½	15	200	$608.00	$727.00	$857.00			
B315	10	½	15	200	$610.00	$729.00	$859.00			
B316*	16	½	15	200	$612.00	$731.00	$861.00			
B317	4.7	¾	20	200	$687.00	$771.00	$1,065.00			
B318	7.4	¾	20	200	$689.00	$773.00	$1,067.00			
B320	14	¾	20	200	$693.00	$777.00	$1,071.00			
B321*	24	¾	20	200	$696.00	$780.00	$1,074.00			
B322	7.4	1	25	200	$708.00	$828.00	$965.00			
B323	10	1	25	200	$710.00	$843.00	$981.00			
B325*	30	1	25	200	$719.00	$841.00	$979.00			
B329	10	1¼	32	200				$805.00	$889.00	$997.00
B330	19	1¼	32	200				$809.00	$894.00	$1,007.00
B331	25	1¼	32	200				$943.00	$1,080.00	$1,135.00
B338	19	1½	40	200				$952.00	$1,093.00	$1,160.00
B339	29	1½	40	200				$954.00	$1,097.00	$1,162.00
B340	37	1½	40	200				$956.00	$1,099.00	$1,164.00
B341	46	1½	40	200				$958.00	$1,108.00	$1,171.00
B347	29	2	50	200				$1,175.00	$1,297.00	$1,353.00
B348	37	2	50	200				$1,177.00	$1,299.00	$1,357.00
B349	46	2	50	200				$1,179.00	$1,305.00	$1,359.00
B350	57	2	50	200				$1,183.00	$1,309.00	$1,365.00
B351	68	2	50	200				$1,188.00	$1,311.00	$1,365.00
B352	83	2	50	200				$1,193.00	$1,315.00	$1,369.00

*Models without characterizing discs. **For corrected C_Vs with piping reduction factor refer to page 9-5.**

ACTUATOR PART #	NRX24-3-T N4H	NRX24-SR-T N4H	NRX24-MFT-T N4H	ARX24-3-T N4H	ARX24-SR-T N4H	ARX24-MFT-T N4H
Add to List Price for heater	+$358.00	+$358.00	+$358.00	+$358.00	+$358.00	+$358.00

067001- 04/13- Subject to change. © Belimo Aircontrols (USA), Inc.

B2, B3 Series Characterized Control Valve, NEMA 4 Spring Return Actuators

2-way and 3-way Valve with Stainless Steel Ball and Stem, NPT Female Ends

Valve Specifications	
Service	chilled or hot water, 60% glycol
Flow characteristic	A-port equal percentage
Controllable flow range	75°
Sizes	1¼", 1½", 2", 2½", 3"
End fitting	NPT female ends
Materials:	
Body	forged brass, nickel plated
Ball	stainless steel
Stem	stainless steel
Seats	Teflon® PTFE
Characterizing disc	TEFZEL® or stainless steel
O-rings	EPDM (lubricated)
Media temp. range	
1½"-2"	0°F to 248°F [-18°C to +120°C]
2½"-3"	0°F to 212°F [-18°C to +100°C]
Body pressure rating	400 psi
Maximum differential pressure (ΔP)	50 psi (1½"-2") 30 psi (2½"-3")
Leakage	0% for A to AB
Cv rating	A-port: as stated in chart B-port: 70% of A to AB C_V

NEMA 4 Spring Return Actuators



B2… 2-Way Characterized Control Valve with Spring Return Actuators

ACTUATOR PART #					AFRX24 N4	AFRX24-MFT N4
Control type					On/Off, Floating Point	Proportional/MFT
Manual override					•	•
Running time					90 seconds	90 seconds
Actuator noise level					<45 dB(A)	<45 dB(A)
Built-in heater					•	•
ELECTRICAL CONNECTION:						
Terminal strip					•	•
CCV Model #	**C_V Rating**	**Valve Nominal Size Inches**	**DN (mm)**	**Close-off psi**		
B231	25	1¼	32	200	$1,158.00	$1,329.00
B232*	37	1¼	32	200	$1,161.00	$1,333.00
B238	19	1½	40	200	$1,165.00	$1,337.00
B239	29	1½	40	200	$1,167.00	$1,339.00
B240*	37	1½	40	200	$1,170.00	$1,341.00
B248	29	2	50	200	$1,404.00	$1,575.00
B249	46	2	50	200	$1,414.00	$1,586.00
B250*	57	2	50	200	$1,423.00	$1,594.00
B251	65	2	50	200	$1,611.00	$1,782.00
B252	85	2	50	200	$1,680.00	$1,852.00
B253	120	2	50	200	$1,748.00	$1,919.00
B254*	240	2	50	200	$1,960.00	$2,131.00
B261	60	2½	65	100	$1,698.00	$1,870.00
B262	75	2½	65	100	$1,767.00	$1,938.00
B263	110	2½	65	100	$1,837.00	$2,008.00
B264	150	2½	65	100	$1,903.00	$2,075.00
B265*	210	2½	65	100	$2,049.00	$2,220.00
B277	70	3	80	100	$1,919.00	$2,090.00
B278	130	3	80	100	$1,991.00	$2,162.00
B280*	170	3	80	100	$2,269.00	$2,441.00

B3… 3-Way Characterized Control Valve with Spring Return Actuators

ACTUATOR PART #					AFRX24 N4	AFRX24-MFT N4
B329	10	1¼	32	200	$1,342.00	$1,509.00
B330	19	1¼	32	200	$1,348.00	$1,513.00
B331	25	1¼	32	200	$1,491.00	$1,714.00
B338	19	1½	40	200	$1,505.00	$1,717.00
B339	29	1½	40	200	$1,507.00	$1,719.00
B340	37	1½	40	200	$1,513.00	$1,721.00
B341	46	1½	40	200	$1,676.00	$1,895.00
B347	29	2	50	200	$1,857.00	$2,059.00
B348	37	2	50	200	$1,860.00	$2,062.00
B349	46	2	50	200	$1,862.00	$2,064.00
B350	57	2	50	200	$1,868.00	$2,069.00
B351	68	2	50	200	$2,038.00	$2,288.00
B352	83	2	50	200	$2,098.00	$2,347.00

*Models without characterizing discs.

For corrected C_Vs with piping reduction factor refer to page 9-5.

ACTUATOR PART #	AFRX24 N4H	AFRX24-MFT N4H
Add to List Price for heater	+$1,002.00	+$1,002.00

067001 - 04/13 - Subject to change. © Belimo Aircontrols (USA), Inc.

Valve Specifications	
Service	chilled or hot water, 60% glycol
Flow characteristic	A-port equal percentage
Controllable flow range	75°
Sizes	½", ¾", 1", 1¼", 1½", 2"
End fitting	NPT female ends
Materials:	
Body	forged brass, nickel plated
Ball	stainless steel
Stem	stainless steel
Seats	Teflon® PTFE
Characterizing disc	TEFZEL® or stainless steel
O-rings	EPDM (lubricated)
Media temp. range	0°F to 248°F [-18°C to +120°C]
Body pressure rating	
½" - 1¼" (B230)	600 psi
1¼" (B231) - 2"	400 psi
Maximum differential pressure (ΔP)	50 psi
Leakage	0% for A to AB
Cv rating	A-port: as stated in chart

5 YEAR WARRANTY

Quick Running Non-Spring Return Actuators







ACTUATOR PART #					LRQB24-1	LRQX24-MFT	NRQB24-1	NRQX24-MFT	ARQB24-1	ARQX24-MFT
Control type					On/Off	Proportional/MFT	On/Off	Proportional/MFT	On/Off	Proportional/MFT
Manual override					•	•	•	•	•	•
Running time					5 seconds	5 seconds (default)	5 seconds	5 seconds (default)	7 seconds	7 seconds
Actuator noise level					<35 dB(A)	<35 dB(A)	<45 dB(A)	<45 dB(A)	<45 dB(A)	<45 dB(A)
ELECTRICAL CONNECTION:										
3 ft, cable, ½ conduit fitting					•	•	•	•	•	•
CV Model #	**Cv Rating**	**Valve Nominal Size Inches**	**DN (mm)**	**Close-Off psi**						
B2... 2-WAY CHARACTERIZED CONTROL VALVE WITH NON-SPRING RETURN ACTUATORS										
B207	0.3	½	15	200	$602.00	$645.00				
B208	0.46	½	15	200	$602.00	$645.00				
B209	0.8	½	15	200	$602.00	$645.00				
B210	1.2	½	15	200	$606.00	$649.00				
B211	1.9	½	15	200	$606.00	$649.00				
B212	3	½	15	200	$610.00	$654.00				
B213	4.7	½	15	200	$619.00	$662.00				
B214	7.4	½	15	200	$623.00	$668.00				
B215	10	½	15	200	$628.00	$672.00				
B216*	16	½	15	200	$630.00	$674.00				
B217	4.7	¾	20	200	$639.00	$687.00				
B218	7.4	¾	20	200	$641.00	$689.00				
B219	10	¾	20	200	$643.00	$691.00				
B220	14	¾	20	200	$645.00	$693.00				
B221*	24	¾	20	200	$648.00	$696.00				
B222	7.4	1	25	200	$672.00	$719.00				
B223	10	1	25	200	$682.00	$725.00				
B224	19	1	25	200	$689.00	$731.00				
B225*	30	1	25	200	$691.00	$734.00				
B229	10	1¼	32	200	$712.00	$754.00				
B230*	19	1¼	32	200	$714.00	$757.00				
B231	25	1¼	32	200			$742.00	$788.00		
B232*	37	1¼	32	200			$757.00	$805.00		
B238	19	1½	40	200			$757.00	$805.00		
B239	29	1½	40	200			$763.00	$809.00		
B240*	37	1½	40	200			$765.00	$811.00		
B248	29	2	50	200					$878.00	$927.00
B249	46	2	50	200					$883.00	$931.00
B250*	57	2	50	200					$894.00	$939.00
B251	65	2	50	200					$1,141.00	$1,185.00
B252	85	2	50	200					$1,207.00	$1,256.00
B253	120	2	50	200					$1,271.00	$1,320.00
B254*	240	2	50	200					$1,475.00	$1,510.00

* Models without characterizing discs.

For corrected Cvs with piping reduction factor refer to page 9-5.

067001- 04/13- Subject to change. © Belimo Aircontrols (USA), Inc.

B3 Series Characterized Control Valve, Quick Running Non-Spring Return Actuators

3-way Valve with Stainless Steel Ball and Stem, NPT Female Ends

Valve Specifications

Service	chilled or hot water, 60% glycol
Flow characteristic	A-port equal percentage B port modified linear for constant flow
Controllable flow range	75°
Sizes	½", ¾", 1", 1¼"
End fitting	NPT female ends
Materials:	
Body	forged brass, nickel plated
Ball	stainless steel
Stem	stainless steel
Seats	Teflon® PTFE
Characterizing disc	TEFZEL® or stainless steel
O-rings	EPDM (lubricated)
Media temp. range	0°F to 248°F [-18°C to +120°C]
Body pressure rating:	600 psi
Maximum differential pressure (ΔP)	50 psi
Leakage	0% for A to AB <2.0% for B to AB
Port ratio	B-port: 70% of A to AB C_V

5 YEAR WARRANTY

Quick Running Non-Spring Return Actuators





ACTUATOR PART #					LRQB24-1	LRQX24-MFT	NRQB24-1	NRQX24-MFT
Control type					On/Off	Proportional/MFT	On/Off	Proportional/MFT
Manual override					•	•	•	•
Running time					5 seconds	5 seconds (default)	5 seconds	5 seconds (default)
Actuator noise level					<35 dB(A)	<35 dB(A)	<45 dB(A)	<45 dB(A)
ELECTRICAL CONNECTION:								
3 ft, cable, ½ conduit fitting					•	•	•	•
CCV Model #	**C_V Rating**	**Valve Nominal Size Inches**	**DN (mm)**	**Close-Off psi**				
B3... 3-WAY CHARACTERIZED CONTROL VALVE WITH NON-SPRING RETURN ACTUATORS								
B307	0.3	½	15	200	$674.00	$721.00		
B308	0.46	½	15	200	$674.00	$721.00		
B309	0.8	½	15	200	$674.00	$721.00		
B310	1.2	½	15	200	$677.00	$723.00		
B311	1.9	½	15	200	$677.00	$723.00		
B312	3	½	15	200	$682.00	$725.00		
B313	4.7	½	15	200	$691.00	$734.00		
B315	10	½	15	200	$693.00	$736.00		
B316*	16	½	15	200	$695.00	$738.00		
B317	4.7	¾	20	200	$714.00	$757.00		
B318	7.4	¾	20	200	$716.00	$761.00		
B320	14	¾	20	200	$719.00	$763.00		
B321*	24	¾	20	200	$722.00	$763.00		
B322	7.4	1	25	200	$803.00	$847.00		
B323	10	1	25	200	$805.00	$849.00		
B325*	30	1	25	200	$809.00	$853.00		
B329	10	1¼	32	200			$820.00	$863.00

* Models without characterizing discs.

For corrected Cvs with piping reduction factor refer to page 9-5.

067001 - 04/13 - Subject to change. © Belimo Aircontrols (USA), Inc.

Actuator Specifications

Torque	180 in-lbs [20 Nm]
Angle of Rotation♦	max 90°, adjustable with mechanical stop electronically variable
Position Indication	handle
Manual Override	external push-button
Direction of Rotation♦	reversible with switch
Dimensions	7.47" x 3.45" x 2.52" [189.8 x 88 x 64 mm]
Electrical Connection	18 GA plenum rated cable, 1/2" conduit connector
Overload Protection	electronic throughout rotation
Auxiliary Switch(es)	(-S) Models: 1 SPDT, 3A (0.5A inductive) @ 250 V Adjustable 5° to 85°
Housing	NEMA 2/IP54
Agency Listings	cULus acc. to UL 60730-1A/-2-14, CAN/CSA E60730-1:02, CSA C22.2 No. 24-93, CE acc. to 2006/95/EC and 89/336/EEC

♦ Variable with MFT



ARX24-MFT

MFT

MFT= 2-10 VDC Default, or Set, Modify, Read:

- **Control (PWM, VDC range, Floating Point)**
- **Feedback (0-10 VDC, 0-5 VDC, 2-10 VDC, Variable)**
- **Motion (run time)**

All AR Actuators have BDCM

LISTED 94 D5 TEMP. IND. & REG. EQUIP.

5 YEAR WARRANTY

Non-Spring Return Actuators

Model	Control Input	Feedback	Power Supply	Running Time(s)	VA Rating	Cable Length	Re-order Number	List Price
ARX24-3	On/Off, Floating Point	Add on	24 VAC/VDC	95	5.5	10 ft.	AR000 0C3 000	$384.00
ARX24-3	On/Off, Floating Point	Add on	24 VAC/VDC	95	5.5	16 ft.	AR000 0C5 000	$405.00
ARX24-3-S	On/Off, Floating Point	Built-in	24 VAC/VDC	95	5.5	10 ft.	AR020 0A3 000	$482.00
ARX24-3-S	On/Off, Floating Point	Built-in	24 VAC/VDC	95	5.5	16 ft.	AR020 0A5 000	$504.00
ARX24-3-T	On/Off, Floating Point	Add on	24 VAC/VDC	95	5.5	N/A	ART00 0T2 000	$340.00
ARX120-3	On/Off, Floating Point	Add on	100-230 VAC/VDC	95	7	10 ft.	AR060 0A3 000	$436.00
ARX120-3	On/Off, Floating Point	Add on	100-230 VAC/VDC	95	7	16.ft.	AR060 0A5 000	$457.00
ARX24-SR	2-10 VDC (4-20mA*)	2-10 VDC	24 VAC/VDC	95	5	10 ft.	AR030 0C3 000	$528.00
ARX24-SR	2-10 VDC (4-20mA*)	2-10 VDC	24 VAC/VDC	95	5	16 ft.	AR030 0C5 000	$550.00
ARX24-SR-T	2-10 VDC (4-20mA*)	2-10 VDC	24 VAC/VDC	95	5	N/A	ARTW0 0T2 000	$487.00
ARX120-SR	2-10 VDC (4-20mA*)	2-10 VDC	100-230 VAC/VDC	95	7.5	10 ft.	AR450 0A3 000	$587.00
ARX120-SR	2-10 VDC (4-20mA*)	2-10 VDC	100-230 VAC/VDC	95	7.5	16 ft.	AR4500A5 000	$609.00
MFT VERSIONS								
ARX24-MFT	Various	Various	24 VAC/VDC	Various	6	3 ft.	AR100 0C1 XXX**	$524.00
ARX24-MFT	Various	Various	24 VAC/VDC	Various	6	10 ft.	AR100 0C3 XXX**	$554.00
ARX24-MFT	Various	Various	24 VAC/VDC	Various	6	16 ft.	AR100 0C5 XXX**	$576.00
ARX24-MFT95	0 to 135 Ω	Various	24 VAC/VDC	150	6	3 ft.	AR0L0 0C3 R01	$536.00

*With 500 Ω resistor

** See page 9-27 for P-Codes available.

The P-Code programs the actuator for the desired Control Input, Feedback and Running Time.

067001- 04/13- Subject to change. © Belimo Aircontrols (USA), Inc.

LR Series Non-Spring Return Actuators

Custom, Direct Coupled Non-Spring Return Actuator, 45 in-lbs Minimum Torque

BELIMO

CCV

Actuator Specifications

Torque	45 in-lbs [5 Nm]
Ambient Temperature	-22°F to +122°F [-30°C to +50°C]
Angle of Rotation♦	max. 90°, adjustable with mechanical stop electronically variable
Position Indication	handle
Manual Override	external push-button
Direction of Rotation♦	reversible with switch
Dimensions	6.18" x 2.6" x 2.34" [157 x 66 x 59.4 mm]
Electrical Connection	18 GA plenum rated cable, 1/2" conduit fitting terminal strip (-T) models
Overload Protection	electronic throughout rotation
Auxiliary Switch	LRX24-3-S - 1SPDT, 3A (0.5A) @ 250 VAC, UL Listed, adjustable 0° to 100°
Housing	NEMA 2/IP54
Agency Listings	cULus acc. to UL 60730-1A/-2-14, CAN/CSA E60730-1:02, CSA C22.2 No. 24-93, CE acc. to 2006/95/EC and 89/336/EEC

♦ Variable with MFT



LRX24-MFT

(shown with conduit fittings)

MFT

MFT= 2-10 VDC Default, or Set, Modify, Read:

- **Control (PWM, VDC range, Floating Point)**
- **Feedback (0-10 VDC, 0-5 VDC, 2-10 VDC, Variable)**
- **Motion (run time)**

All actuators have BDCM

LISTED 94 D5 TEMP. IND. & REG. EQUIP.

5 YEAR WARRANTY

Non-Spring Return Actuators

Model	Control Input	Feedback	Power Supply	Running Time(s) [Default]	VA Rating	Cable Length	Re-order Number	List Price ‡
BASIC PRODUCTS								
LRX24-3	On/Off, Floating Point	Add on	24 VAC/DC	90 seconds	2	10 ft.	LR000 RC3 000	$236.00
LRX24-3	On/Off, Floating Point	Add on	24 VAC/DC	90 seconds	2	16 ft.	LR000 RC5 000	$257.00
LRX24-3-S	On/Off, Floating Point	Add on	24 VAC/DC	90 seconds	2	10 ft.	LR020 RA3 000	$324.00
LRX24-3-S	On/Off, Floating Point	Add on	24 VAC/DC	90 seconds	2	16 ft.	LR020 RA5 000	$345.00
LRX24-3-T	On/Off, Floating Point	Add on	24 VAC/DC	90 seconds	2	N/A	LRT00 RT2 000	$190.00
LRX120-3	On/Off, Floating Point	Add on	100-230 VAC	90 seconds	4	10 ft.	LR060 RA3 000	$282.00
LRX120-3	On/Off, Floating Point	Add on	100-230 VAC	90 seconds	4	16 ft.	LR060 RA5 000	$304.00
LRX24-SR	2-10 VDC (4-20mA*)	2-10 VDC	24 VAC/DC	90 seconds	4.5	10 ft.	LR030RC3 000	$352.00
LRX24-SR	2-10 VDC (4-20mA*)	2-10 VDC	24 VAC/DC	90 seconds	4.5	16 ft.	LR560RC5 000	$372.00
LRX24-SR-T	2-10 VDC (4-20mA*)	2-10 VDC	24 VAC/DC	90 seconds	4.5	N/A	LRTW0 5T2 000	$300.00
LRX120-SR	2-10 VDC (4-20mA*)	2-10 VDC	100-230 VAC	90 seconds	4.5	10 ft.	LR450 5A3 000	$422.00
LRX120-SR	2-10 VDC (4-20mA*)	2-10 VDC	100-230 VAC	90 seconds	4.5	16 ft.	LR450 5A5 000	$444.00
MFT VERSIONS								
LRX24-MFT	Various	Various	24 VAC/VDC	Various	5	3 ft.	LR100 RC1 XXX**	$393.00
LRX24-MFT	Various	Various	24 VAC/VDC	Various	5	10 ft.	LR100 RC3 XXX**	$423.00
LRX24-MFT	Various	Various	24 VAC/VDC	Various	5	16 ft.	LR100 RC5 XXX**	$444.00
LRX24-MFT95	0 to 135 Ω	2-10 VDC	24 VAC/VDC	150 seconds	5	3 ft.	LR0L0 RC1 R01	$454.00

‡ Prices do not reflect additional programming code surcharge.
*With 500 Ω resistor
** See page 9-27 for P-Codes available.
The P-Code programs the actuator for the desired Control Input, Feedback and Running Time.

067001 - 04/13 - Subject to change. © Belimo Aircontrols (USA), Inc.

-3 and SR

CONFIGURATION DESCRIPTION	P-CODE	CONTROL INPUT	FEEDBACK POSITION	RUNNING TIME	List Price ‡
		CONTROL			
N/A	0	2-10 VDC (for -3)	2-10 VDC (for -3)	150 seconds	No Charge
N/A	2	2-10 VDC (for -SR)	2-10 VDC (for -SR)	90 seconds	No Charge

MFT and PC

CONFIGURATION DESCRIPTION	P-CODE	CONTROL INPUT	FEEDBACK POSITION	RUNNING TIME	List Price ‡
		CONTROL			
P-10001	A01	2-10 VDC	2-10 VDC	150 seconds	No Charge*
P-10002	A02	0.5-10 VDC	0-10 VDC	150 seconds	No Charge
P-10003	A03	2-10 VDC	0-5.0 VDC	150 seconds	No Charge
P-10004	A04	4-7 VDC	2-10 VDC	150 seconds	$34.00
P-10005	A05	6-9 VDC	2-10 VDC	150 seconds	$34.00
P-10006	A06	10.5 -13.5 VDC	2-10 VDC	150 seconds	$34.00
P-10007	A07	0.5-5 VDC	2-10 VDC	150 seconds	$34.00
P-10009	A09	5-10 VDC	2-10 VDC	150 seconds	$34.00
P-10010	A10	5-10 VDC	0-10 VDC	150 seconds	$34.00
P-10013	A13	0.5-10 VDC	2-10 VDC	150 seconds	$34.00
P-10015	A15	2-5 VDC	2-10 VDC	150 seconds	$34.00
P-10016	A16	2-6 VDC	2-10 VDC	150 seconds	$34.00
P-10017	A17	6-10 VDC	2-10 VDC	150 seconds	$34.00
P-10018	A18	14-17 VDC	2-10 VDC	150 seconds	$34.00
P-10020	A20	9-12 VDC	2-10 VDC	150 seconds	$34.00
P-10028	A28	0.5-10 VDC	0.5-10 VDC	100 seconds	No Charge
P-10031	A31	0.5- 4 VDC	2-10 VDC	150 seconds	$34.00
P-10063	A63	0.5-4.5 VDC	0.5- 4.5 VDC	150 seconds	No Charge
P-10032	A32	2-10 VDC	2-10 VDC	100 seconds	No Charge
P-10064	A64	5.5-10 VDC	5.5-10.0 VDC	150 seconds	No Charge
N/A	AAT	2-10 VDC	2-10 VDC	20 seconds	No Charge
P-20001	W01	0.59-2.93 seconds	2-10 VDC	150 seconds	$34.00
P-20002	W02	0.02 to 5.00 seconds	2-10 VDC	150 seconds	No Charge
P-20003	W03	0.10 to 25.50 seconds	2-10 VDC	150 seconds	No Charge
P-20004	W04	0.10 to 25.60 seconds	2-10 VDC	150 seconds	$34.00
P-20005	W05	0.10 to 5.20 seconds	0-5.0 VDC	150 seconds	$34.00
P-30001	F01	Floating Point	2-10 VDC	150 seconds	No Charge
P-30002	F02	Floating Point	0-10 VDC	150 seconds	$34.00
P-40002	J02	On/Off	2-10 VDC	150 seconds	No Charge
N/A	S01 (for -PC only)	Phasecut	2-10 VDC	150 seconds	No Charge
P-16001	R01 (for -MFT95 only)	0 to 135 Ω	2-10 VDC	150 seconds	No Charge

NOTE: More P-codes are available, consult factory.
‡ Add to list price on previous page.
*P-10001 is the default configuration for MFT.

067001- 04/13- Subject to change. © Belimo Aircontrols (USA), Inc.

		Non-Spring Return Actuator		Spring Return Actuator			
WEATHERSHIELDS		**LR**	**AR**	**LF**	**AF**	**AFR**	**List Price**
	**ZS-CCV-90***			•	•		$215.00
	ZS-CCV-100*	•	•				$215.00
	**ZS-CCV-110***					•	$215.00
EXTENSION BRACKET							
	CCV-EXT-KIT CCV/PICCV valve neck extension kit for M5 screw	•	•	•	•	•	$193.00
	CCV-EXT-M4 Linkage extension kit	•	•	•	•	•	$193.00
AUXILIARY SWITCHES & POTENTIOMETERS							
	**S1A** Auxiliary switch - 1x SPDT, 3A (0.5A inductive) @ 250 VAC	•	•				$84.00
	S2A Auxiliary switch - 2x SPDT, 3A (0.5A inductive) @ 250 VAC	•	•				$125.00
	P140A GR Feedback potentiometer 140 Ω	•	•				$138.00
	P500A GR Feedback potentiometer 500 Ω	•	•				$138.00
	P1000A GR Feedback potentiometer 1000 Ω	•	•				$138.00
	P2800A GR Feedback potentiometer 2800 Ω	•	•				$138.00
	P5000A GR Feedback potentiometer 5000 Ω	•	•				$138.00
	P10000A GR Feedback potentiometer 10000 Ω	•	•				$138.00

NOTE: CCV-EXT-KIT is an option for all CCVs except for B6 flanged CCVs.
NOTE: For TFR/TR actuators, no weathershield available at this time. Please call 800-543-9038 for assistance.
* Designed to NEMA 4 specifications.
NOTE: For B6 series valves, no weathershield available at this time.

067001 - 04/13 - Subject to change. © Belimo Aircontrols (USA), Inc.

10 HIGH TEMPERATURE CHARACTERIZED CONTROL VALVES (HTCCV)

- Fluid dynamically designed elongated characterizing disc reduces turbulent flow and improves efficiency of the system.
- Maintenance free – no repacking required after being in service for an extended period of time.
- Dezincificated brass body to ensure the mechanical strength and integrity of the valve in a critical steam application.

Applications

Available with spring and non-spring return actuators, the HTCCV meets the challenges of space restricted applications, such as unit ventilations and fan coil units. In addition, with its sturdy construction and specially designed disc, it is the perfect solution for a steam control valve with supply pressures of 15 psig or less.

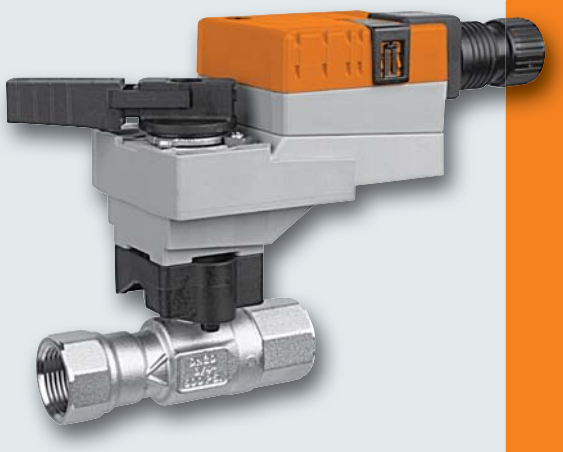

High Temperature Characterized Control Valve (HTCCV) Nomenclature

B2	15	HT	186	TR	24	-SR	
Valve B2 = 2-way	**Valve Size** 15-25 = ½" to 1"	High Temperature	**C_V Rating** 1.86 Refer to Table	**Actuator Type** Non-Spring Return TR… LR… Spring Return TFR… LF…	**Power Supply** 24 = 24 VAC/DC 120 = 120 VAC*	**Control** Blank = On/Off -3 = Floating Point -SR = 2-10 VDC -MFT = Multi-Function Technology	-S = Built-in Auxiliary Switch

*TFR Series has 100 to 240 VAC nominal power supply.

Ordering Example

1 Choose the valve actuator combination.

B215HT186+TR24-SR US **+NO** **+Tagging (if needed)**

2 Specify preference or configuration.

Set-Up

Non-Spring Models
NO = Normally Open
NC = Normally Closed

Spring Return Models
NO/FO = Normally Open/Fail Open
NO/FC = Normally Open/Fail Closed

NC/FO = Normally Closed/Fail Open
NC/FC = Normally Closed/Fail Closed

Refers to valve ports A to AB.

3 Does order require tagging?

Tagging:
Valves may be tagged per customer specification. ($10.00 per tag)

Example:
AHU-1
FCU-2

Part number for tagging:
99981-00101

4 Complete Ordering Example: B215HT186+TR24-SR US+NO

Control Valve Product Range

High Temperature Characterized Control Valve Product Range
B2HT

	Valve Nominal Size		Type	Suitable Actuators			
				Non-Spring Return		Spring Return	
C_V	Inches	DN [mm]	2-way NPT				
0.29	½	15	B215HT029	TR Series	LR Series	TFR Series	LF Series
0.46	½	15	B215HT046				
0.73	½	15	B215HT073				
1.16	½	15	B215HT116				
1.86	½	15	B215HT186				
2.90	½	15	B215HT290				
4.55	½	15	B215HT455*				
1.86	¾	20	B220HT186				
2.90	¾	20	B220HT290				
4.64	¾	20	B220HT464				
7.31	¾	20	B220HT731				
9.28	¾	20	B220HT928				
13.20	¾	20	B220HT1320				
4.64	1	25	B225HT464				
7.31	1	25	B225HT731				
11.60	1	25	B225HT1160				
18.56	1	25	B225HT1856				
28.00	1	25	B225HT2800				

* modified equal percentage.

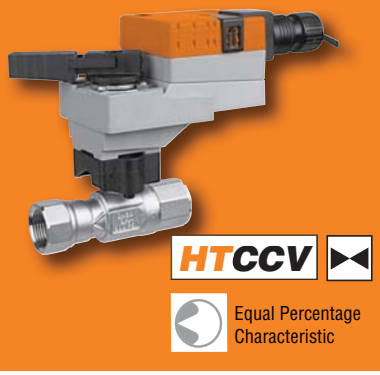

Equal Percentage Characteristic

Mode of Operation
The control valve is operated by an electronic actuator that responds to a standard voltage for on/off control, by a proportional VDC/4…20 mA, or 3-point control system. The actuator will then move the ball of the valve to the position dictated by the contol signal and change the flow.

Product Features
Equal-percentage characteristic of the flow. B215HT455 model has modified equal percentage characteristic.

Actuator Specifications

Control type	on/off, floating point, 2-10 VDC multi-function technology (MFT)
Manual override	only LR, TR series
Electrical connection	3 ft [1m] cable with ½" conduit fitting (except TR)

Valve Specifications

Service	hot water, max. 60% glycol, steam
Flow characteristic	A-port equal percentage
Controllable flow range	75°
Sizes	½" - 1"
End fitting	NPT female ends
Materials	
Body	brass (DZR) P-CuZn35Pb2
Ball	stainless steel
Stem	stainless steel
Seats	Tefzel®
Seat O-rings	Viton rubber
Characterizing disc	Tefzel®
O-rings	EPDM (lubricated)
Pressure rating	600 psi
Media temp range	
Steam	250°F
Water	60°F to 266°F
Close off pressure	200 psi
Maximum differential pressure (ΔP)	60 psi partially open ball 116 psi full open only (Model #B215HT455)
Steam	15 psi
Maximum inlet pressure	
Steam	15 psi
Leakage	bubble tight 0%

067001- 04/13 - Subject to change. © Belimo Aircontrols (USA), Inc.

SET-UP

		TWO-WAY VALVE (Specify upon ordering)	
NON-SPRING RETURN Stays in Last Position	**TR24-3 US**	Power to pin 2 will drive valve CCW. Power to pin 3 will drive valve CW.	
	TR24-SR US	**NC:** Closed A to AB, will open as voltage increases.	**NO:** Open A to AB, will close as voltage increases (Can be chosen with switch inside terminal block of actuator).
	LRB24-3, **LRB24-SR,** **LRX24-MFT**	Power to pin 2 will drive valve CW. Power to pin 3 will drive valve CCW. The above will function when the directional switch is in the "1" position, to reverse select the "0" position.	**NO:** Open A to AB, will close as voltage increases or power applied. (Can be chosen with CW/CCW switch).
SPRING RETURN Note Fail Position	**TFRX24** **LF24 US**	**NO/FO** Valve: Open A to AB will drive closed. Spring Action: Will spring open A to AB upon power loss.	**NC/FC** Valve: Closed A to AB will drive open. Spring Action: Will spring closed A to AB upon power loss.
	TFR (-3), MFT, SR **LF (-3), MFT, SR** Floating or Proportional type actuators	**NC/FO** Valve: Closed A to AB will drive open. Spring Action: Will spring open A to AB upon power loss. **NO/FO** Valve: Open A to AB Spring Action: Will spring open A to AB upon power loss. (**NO** action can be chosen with CW/CCW switch).	**NC/FC** or **NO/FC** Valve: Closed A to AB or Open A to AB (Can be chosen with CW/CCW switch). Spring Action: Will spring closed A to AB upon power loss.

067001- 04/13 - Subject to change. © Belimo Aircontrols (USA), Inc.

Valve Specifications

Service	hot water, 60% glycol, steam
Flow characteristic	A-port equal percentage
Media temp range	60°F to 266°F [16°C to 130°C] Water max 250°F [120°C] Steam
Maximum differential pressure (ΔP)	60 psi typical application 116 psi full open only (Model # B215HT455) steam: 15 psi
Maximum inlet	steam: 15 psi
Leakage	0% for A to AB

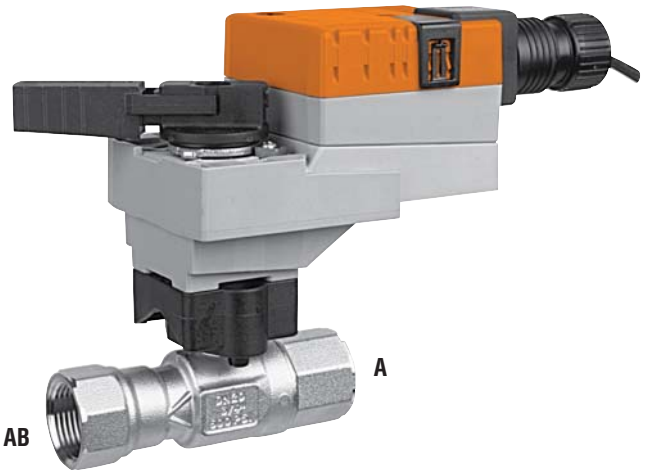

FLOW PATTERN

2-way High Temperature Characterized Control Valves™

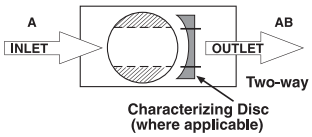

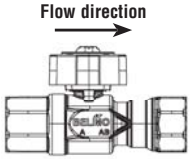

Upstream A
Downstream AB

Valve should be installed with the disc downstream unlike the CCV.

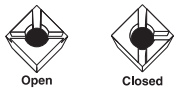

ASSEMBLY

1. One screw attaches to valve
2. Four actuator mounting positions
3. 2-way flow pattern
4. Top of valve stem indicates direction of flow (Flow A to AB shown)

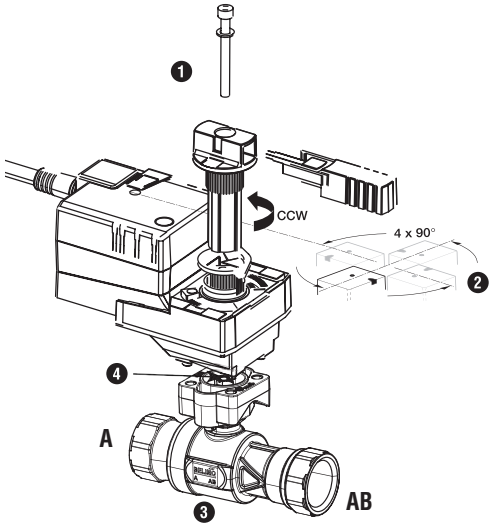

OPERATION/INSTALLATION

2-way Valve Piping Diagram
(1 Input, 1 Output)

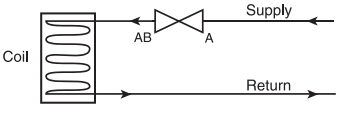

Assembly can be mounted horizontally or vertically for water applications. For steam applications when the valve is mounted horizontally, it must be 90° off center of the pipe. Do not install with actuator below pipe.

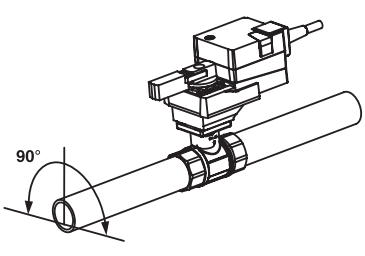

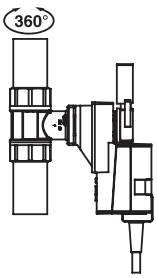

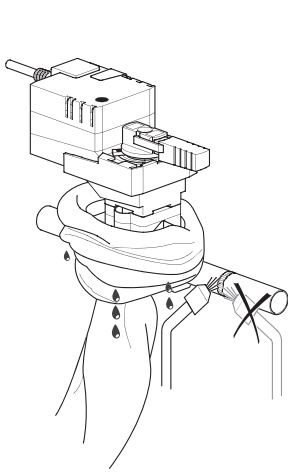

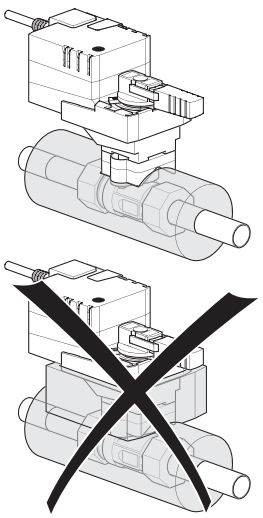

067001- 04/13 - Subject to change. © Belimo Aircontrols (USA), Inc.

High Temperature CCV, Non-Spring Return Actuator

2-way Valve with Stainless Steel Ball and Stem, NPT Female Ends

BELIMO

HTCCV

Valve Specifications

Service	hot water 60% glycol, steam
Flow characteristic	A-port equal percentage
Controllable flow range	75°
Sizes	½" - 1"
End fitting	NPT female ends
Materials:	
Body	Dezincificated (DZR) brass (P-CuZn35Pb2)
Ball	stainless steel
Stem	stainless steel
Seats	Tefzel®
Characterizing disc	Tefzel®
O-rings	EPDM (lubricated)
Pressure rating	600 psi
Media temp. range	
Steam	250°F
Water	60°F to 266°F
Close off pressure	200 psi
Maximum differential pressure (ΔP)	60 psi typical application 116 psi full open only (model # B215HT455)
Maximum inlet	steam: 15 psi
Leakage	bubble tight 0%
C_V rating	see chart below for values

5 YEAR WARRANTY

Non-Spring Return Actuators







ACTUATOR PART #					TR24-3 US	TR24-SR US	LRB24-3	LRB24-SR	LRX24-MFT
Control type					Floating Point	Proportional	On/Off, Floating Point	Proportional	Proportional/MFT
Manual override					•	•	•	•	•
Running time					105 seconds	90 seconds	90 seconds	90 seconds	150 seconds (default) variable (35 to 150 seconds)
Noise level					<35 dB(A)	<35 dB(A)	<35 dB(A)	<35 dB(A)	<35 dB(A)
ELECTRICAL CONNECTION:									
3 ft. cable, ½" conduit fitting							•	•	•
Covered terminal strip					•	•			
HTCCV Model #	**C_V Rating**	**Valve Nominal Size Inches**	**DN mm**	**Close-Off psi**					
2-WAY HIGH TEMPERATURE CCV WITH NON-SPRING RETURN ACTUATORS									
B215HT029	0.29	½	15	200	$253.00	$363.00	$291.00	$377.00	$511.00
B215HT046	0.46	½	15	200	$253.00	$363.00	$291.00	$377.00	$511.00
B215HT073	0.73	½	15	200	$253.00	$363.00	$291.00	$377.00	$511.00
B215HT116	1.16	½	15	200	$258.00	$367.00	$293.00	$380.00	$514.00
B215HT186	1.86	½	15	200	$258.00	$367.00	$295.00	$383.00	$516.00
B215HT290	2.90	½	15	200	$260.00	$369.00	$297.00	$385.00	$518.00
B215HT455*	4.55	½	15	200	$264.00	$373.00	$330.00	$417.00	$550.00
B220HT186	1.86	¾	20	200			$330.00	$417.00	$550.00
B220HT290	2.90	¾	20	200			$330.00	$417.00	$550.00
B220HT464	4.64	¾	20	200			$332.00	$417.00	$550.00
B220HT731	7.31	¾	20	200			$332.00	$420.00	$552.00
B220HT928	9.28	¾	20	200			$334.00	$422.00	$555.00
B220HT1320	13.20	¾	20	200			$338.00	$424.00	$559.00
B225HT464	4.64	1	25	200			$373.00	$461.00	$595.00
B225HT731	7.31	1	25	200			$373.00	$461.00	$595.00
B225HT1160	11.60	1	25	200			$377.00	$465.00	$599.00
B225HT1856	18.56	1	25	200			$377.00	$465.00	$599.00
B225HT2800	28.00	1	25	200			$380.00	$467.00	$602.00

*Models have modified equal percentage characteristic.

OPTIONS (ADD TO LIST PRICE)	
Description	**LRB24-3-S**
built-in auxiliary switch	$68.00

067001- 04/13 - Subject to change. © Belimo Aircontrols (USA), Inc.

Valve Specifications

Service	hot water 60% glycol, steam
Flow characteristic	A-port equal percentage
Controllable flow range	75°
Sizes	½" - 1"
End fitting	NPT female ends
Materials:	
Body	Dezincificated (DZR) brass (P-CuZn35Pb2)
Ball	stainless steel
Stem	stainless steel
Seats	Tefzel®
Characterizing disc	Tefzel®
O-rings	EPDM (lubricated)
Pressure rating	600 psi
Media temp. range	
Steam	250°F
Water	60°F to 266°F
Close off pressure	200 psi
Maximum differential pressure (ΔP)	60 psi typical application 116 psi full open only (model # B215HT455) steam: 15 psi
Maximum inlet	steam: 15 psi
Leakage	bubble tight 0%
C_V rating	see chart below for values

5 YEAR WARRANTY

Spring Return Actuators





ACTUATOR PART #		TFRX24	TFR24-3	TFR24-SR	TFR24-MFT	LF24 US	LF24-3 US	LF24-SR US	LF24-MFT US
Control type		On/Off	Floating Point	Proportional	Proportional/ MFT	On/Off	Floating Point	Proportional	Proportional/ MFT
Running time	Motor	<75 seconds	<90 seconds	<95 seconds	150 seconds	<75 seconds	150 seconds	150 seconds	150 seconds
	Spring	<75 seconds @ -4°F to +122°F <75 seconds @-22°F	<25 seconds @ -4°F to +122°F <60 seconds @-22°F	<25 seconds @ -4°F to +122°F <60 seconds @-22°F	<25 seconds @ -4°F to +122°F <60 seconds @-22°F	<25 seconds @ -4°F to +122°F <60 seconds @-22°F	<25 seconds @ -4°F to +122°F <60 seconds @-22°F	<25 seconds @ -4°F to +122°F <60 seconds @-22°F	<25 seconds @ -4°F to +122°F <60 seconds @-22°F
Noise level	Motor	<50 dB(A)	<35 dB(A)	<35 dB(A)	<35 dB(A)	<50 dB(A)	<30 dB(A)	<30 dB(A)	<30 dB(A)
	Spring	<62 dB(A)	<62 dB(A)	<62 dB(A)	<62 dB(A)	<62 dB(A)	<62 dB(A)	<62 dB(A)	<62 dB(A)
ELECTRICAL CONNECTION:									
3 ft. cable, ½" conduit fitting		•	•	•	•	•	•	•	•

HTCCV Model #	C_V Rating	Valve Nominal Size Inches	DN mm	Close-Off psi							
2-WAY HIGH TEMPERATURE CCV WITH SPRING RETURN ACTUATORS											
B215HT029	0.29	½	15	200	$367.00	$433.00	$470.00	$532.00				
B215HT046	0.46	½	15	200	$367.00	$433.00	$470.00	$532.00				
B215HT073	0.73	½	15	200	$367.00	$433.00	$470.00	$532.00				
B215HT116	1.16	½	15	200	$369.00	$435.00	$473.00	$534.00				
B215HT186	1.86	½	15	200	$369.00	$435.00	$473.00	$534.00				
B215HT290	2.90	½	15	200	$377.00	$444.00	$481.00	$542.00				
B215HT455*	4.55	½	15	200	$380.00	$446.00	$483.00	$544.00				
B220HT186	1.86	¾	20	200					$444.00	$536.00	$571.00	$697.00
B220HT290	2.90	¾	20	200					$444.00	$536.00	$571.00	$697.00
B220HT464	4.64	¾	20	200					$444.00	$536.00	$571.00	$697.00
B220HT731	7.31	¾	20	200					$446.00	$538.00	$575.00	$699.00
B220HT928	9.28	¾	20	200					$450.00	$540.00	$577.00	$701.00
B220HT1320	13.20	¾	20	200					$452.00	$542.00	$579.00	$703.00
B225HT464	4.64	1	25	200					$514.00	$606.00	$639.00	$763.00
B225HT731	7.31	1	25	200					$514.00	$606.00	$639.00	$763.00
B225HT1160	11.60	1	25	200					$518.00	$610.00	$643.00	$767.00
B225HT1856	18.56	1	25	200					$529.00	$610.00	$643.00	$767.00
B225HT2800	28.00	1	25	200					$520.00	$612.00	$645.00	$769.00

*Models have modified equal percentage characteristic.

OPTIONS (ADD TO LIST PRICE ABOVE)	TFRX24-S	TFR24-3-S	TFR24-SR-S		LF24-S US	LF24-3-S US	LF24-SR-S US	LF24-MFT-S US
built-in auxiliary switch	$55.00	$55.00	$55.00		$57.00	$57.00	$57.00	$57.00

OPTIONS (ADD TO LIST PRICE ABOVE)	TFRX120-S				LF120-S US
built-in auxiliary switch	$99.00				$91.00

OPTIONS (ADD TO LIST PRICE ABOVE)	TFRX120				LF120 US
120 VAC power supply	$44.00				$34.00

Note: Weathershields are not available at this time.

067001- 04/13 - Subject to change. © Belimo Aircontrols (USA), Inc.

AUXILIARY SWITCHES & POTENTIOMETERS		Non-Spring Return LR	List Price
	**S1A** Auxiliary switch - 1x SPDT, 3A (0.5A inductive) @ 250 VAC	•	$84.00
	S2A Auxiliary switch - 1x SPDT, 3A (0.5A inductive) @ 250 VAC	•	$125.00
	P140A GR Feedback potentiometer 140 Ω	•	$138.00
	P500A GR Feedback potentiometer 500 Ω	•	$138.00
	P1000A GR Feedback potentiometer 1000 Ω	•	$138.00
	P2800A GR Feedback potentiometer 2800 Ω	•	$138.00
	P5000A GR Feedback potentiometer 5000 Ω	•	$138.00
	P10000A GR Feedback potentiometer 10000 Ω	•	$138.00

067001- 04/13 - Subject to change. © Belimo Aircontrols (USA), Inc.

ROTARY VALVES

BALL AND ZONE VALVES

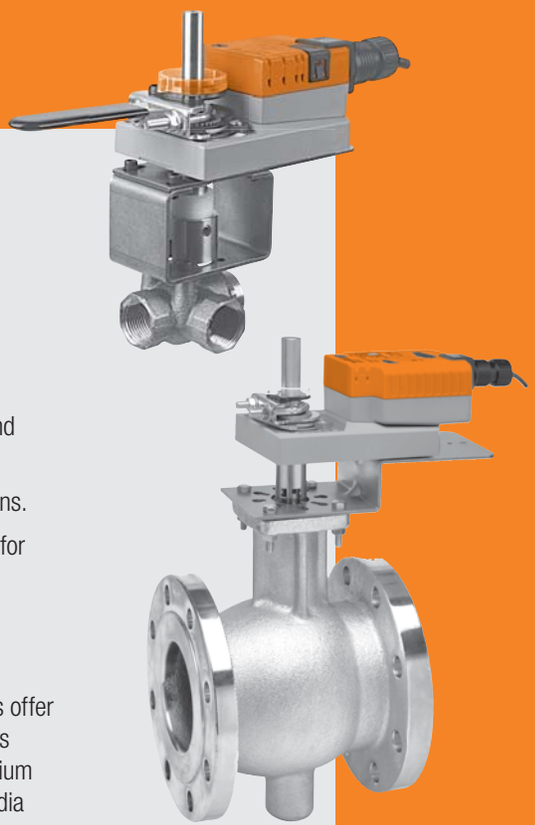

Ball Valves:

- Bronze, cast iron and stainless steel ball valves with NPT and flanged connections.
- Range of fluid temperature rating ideal for chilled and hot water, and steam.
- Fitted with damper type rotary actuators for easy field assembly and installation.
- RPTFE seats allows valve to operate in high temperature applications.
- Full, reduced, and standard port and a wide range of sizes and C_V for various applications.

Applications

Available with spring return or non-spring return actuators, ball valves offer the solution for aggressive applications. The high close-off capabilities and stainless steel trim allow these valves to be used in low and medium pressure steam applications and those that operate with a higher media temperature.

Zone Valves:



- Designed to fit in compact areas where on/off control is required.
- Actuator installation is a snap with an easy, one-handed removal or engagement.
- Actuator has a synchronous and a mechanical spring for fail-safe operation.
- Economical operation allows for low current draw and multiple valves per transformer.
- Enhanced motion gear action reduces motor wear and provides smooth, quiet operation with no water hammer and dependable close-off.

Applications

For high rise and commercial applications where higher close-off is required: fin tube casing, fan coils, radiant panels and duct coils. Zone valves control the flow of hot and chilled water through coils and heat exchangers.

Ball Valve Nomenclature

B2	24	VS	AMX	24	-MFT-X1	
Valve B2 = 2-way B3 = 3-way B6 = 2-way Flanged	**Valve Size** 12-80 = ½" to 3" 50-250 = 2" to 10" (Flanged)	**Industrial Construction/ Material** VS = Bronze Body, Stainless Steel Ball and Stem VSS = Stainless Steel Body, Ball and Stem	**Actuator Type** Non-Spring Return LM… NM… AM… GM… SY… SY…P Spring Return LF… NF… AF… SY…	**Power Supply** 24 = 24 VAC/DC 120 = 120 VAC 230 = 230 VAC	**Control** -3-X1 = On/Off, Floating Point -MFT-X1 = Multi-Function Technology -MFT95 = 0-135 Ω	-S = Built-in Auxiliary Switch

Ordering Example

1 Choose the valve actuator combination.

B224VS+AMX24-MFT-X1

2 Specify preference or configuration.

3 **For MFT orders only - select programming code**

+NO | **+Tagging (if needed)**

4 Does order require tagging?

Set-Up

Non-Spring Models
NO = Normally Open
NC = Normally Closed

Spring Return Models
NO/FO = Normally Open/Fail Open
NO/FC = Normally Open/Fail Closed

NC/FO = Normally Closed/Fail Open
NC/FC = Normally Closed/Fail Closed

Refers to valve ports A to AB.

P-10001 (A01)

P-100xx (Axx)	Control voltage applications
P-200xx (Wxx)	Pulse width modulation applications
P-300xx (Fxx)	Floating Point applications
P-400xx (Jxx)	On/Off applications
X-XXXXX	Create custom MFT configuration code
X-XXXXX	Create custom MFT configuration in the field with MFT-actuator PC software

Tagging:
Valves may be tagged per customer specification.
($10.00 per tag)

Example:
AHU-1
FCU-2

Part number for tagging:
99981-00101

5 Complete Ordering Example: B224VS+AMX24-MFT-X1+NO+A01

11 INDUSTRIAL BALL VALVES

- Bronze, cast iron and stainless steel ball valves with NPT and flanged connections.
- Range of media temperature ratings ideal for chilled or hot water, and steam.
- Fitted with damper type rotary actuators for easy field assembly and installation.
- Full ported for unobstructed flow.
- Wide range of sizes and C_V for various applications.

Applications

Available with non-spring return, spring return or electronic fail-safe actuators, ball valves offer the solution for HVAC applications. The high close-off capabilities with high quality stainless steel trim allow these valves to be used in low and medium pressure steam applications and applications that operate with a higher media temperature.

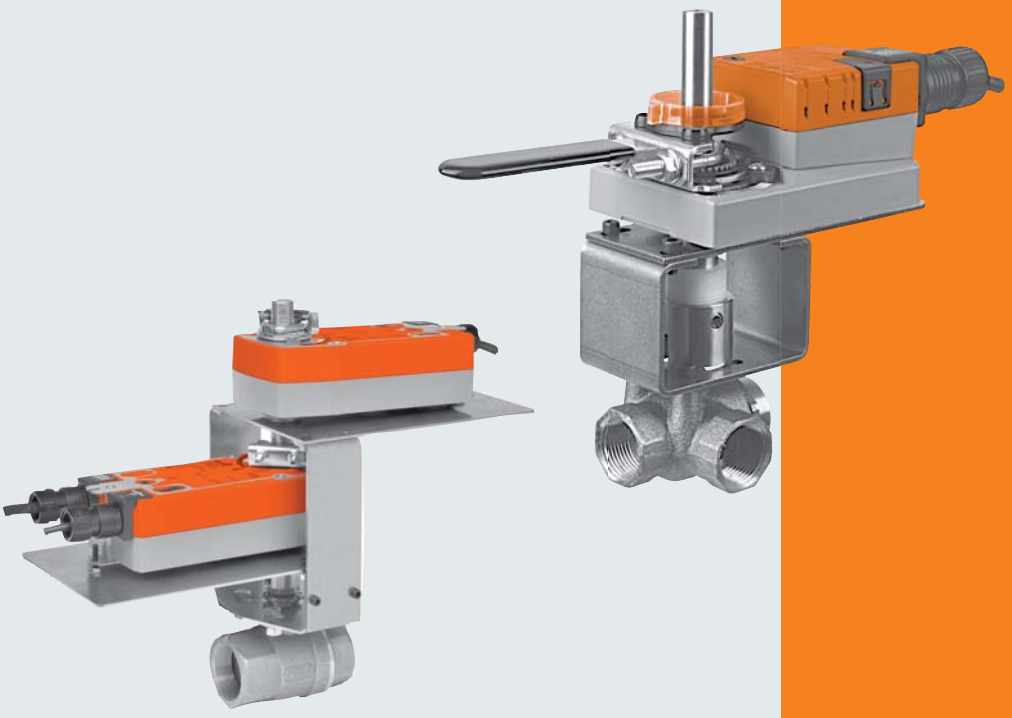

Ball Valve Nomenclature

B2	24	VS		AMX	24	-MFT-X1	
Valve B2 = 2-way B3 = 3-way B6 = 2-way Flanged	**Valve Size** 15-80 = ½" to 3" 50-250 = 2" to 10" (Flanged)	**Industrial Construction/ Material** VS = Bronze Body, Stainless Steel Ball and Stem VSS = Stainless Steel Body, Ball and Stem	**Cv** 1-370	**Actuator Type** Non-Spring Return LM… NM… AM… GM… SY… SY…P Spring Return LF… NF… AF… Electronic Fail-Safe GK...	**Power Supply** 24 = 24 VAC/DC 120 = 120 VAC 230 = 230 VAC	**Control** -3-X1 = On/Off, Floating Point -MFT-X1 = Multi-Function Technology -MFT95-X1 = 0-135 Ω	-S = Built-in Auxiliary Switch

Ordering Example

1 Choose the valve actuator combination.

B224VS+AMX24-MFT-X1

2 Specify preference or configuration.

3 **For MFT orders only - select programming code**

+NO **+Tagging (if needed)**

Set-Up

Non-Spring Models
NO = Normally Open
NC = Normally Closed

Spring Return Models
NO/FO = Normally Open/Fail Open
NO/FC = Normally Open/Fail Closed

NC/FO = Normally Closed/Fail Open
NC/FC = Normally Closed/Fail Closed

Refers to valve ports A to AB.

P-10001 (A01)

P-100xx (Axx)	Control voltage applications
P-200xx (Wxx)	Pulse width modulation applications
P-300xx (Fxx)	Floating point applications
P-400xx (Jxx)	On/off applications
X-XXXXX	Create custom MFT configuration code
X-XXXXX	Create custom MFT configuration in the field with MFT actuator PC software

4 Does order require tagging?

Tagging:
Valves may be tagged per customer specification.
($10.00 per tag)

Example:
AHU-1
FCU-2

Part number for tagging:
99981-00101

5 Complete Ordering Example: B224VS+AMX24-MFT-X1+NO+A01

Control Valve Product Range

VS/VSS Ball Valve Product Range
B2.., B3.., B6..



2 YEAR WARRANTY

	Valve Nominal Size		Type			Suitable Actuators		
C_V	Inches	DN [mm]	2-way NPT	3-way NPT	2-Way Flanged	Non-Spring Return	Spring Return	Electronic Fail-Safe
1	½	15	B2050VS-01			LM Series	LF Series	
2	½	15	B2050VS-02					
4	½	15	B2050VS-04					
15	½	15	B2050VS-15					
30	¾	20	B219VS			NM Series	NF Series	
51	¾	20	B220VS					
43	1	25	B224VS			AM Series	AF Series	
68	1	25	B225VS					
48	1¼	32	B232VS					
84	1½	40	B239VS			GM Series		
177	1½	40	B240VS					
108	2	50	B249VS					
389	2	50	B250VS					GK
190	2½	65	B265VS					
370	3	80	B280VS					GK
15	½	15	B2050VSS-15			NM Series	LF	
30	¾	20	B219VSS				NF	
43	1	25	B224VSS			AM Series	AF Series	
48	1¼	32	B232VSS					
84	1½	40	B239VSS			GM Series		
108	2	50	B249VSS					
190	2½	65	B265VSS					GK
370	3	80	B280VSS					
4.8	½	15		B315VS		LM	LF	
11	¾	20		B320VS		AM Series	NF	
21	1	25		B325VS			AF Series	
33	1¼	32		B332VS				
49	1½	40		B340VS		GM		
330	2	50			B650VS	SY Series		
420	2½	65			B665VS			
600	3	80			B680VS			
1200	4	100			B6100VS			
3300	6	150			B6150VS			
9000	8	200			B6200VS			
12400	10	250			B6250VS			

SY Series

Mode of Operation
The control valve is operated by an electronic actuator that responds to a standard voltage for on/off control, by a proportional VDC/4…20 mA, or 3-point control system. The actuator will then move the ball of the valve to the position dictated by the contol signal thus changing the flow.

Product Features
Modified equal percentage of flow for B2, B3 and B6.
Modified linear flow for B3.

Actuator Specifications

Control type	on/off, floating point, proportional, 2-10 VDC multi-function technology (MFT)
Manual override	LM, NM, GM, AM, SY, AF, NF, GK
Electrical connection	3 ft [1m] cable with ½" conduit fitting

Valve Specifications

Service	chilled or hot water, (60% glycol), steam
Flow characteristic	modified equal percentage (2-way), modified linear (3-way)
Sizes	½" to 10"
End fitting	NPT (B2...VS & B3.. VS) flanged (B6...VS)
Materials	
Body	bronze (B2..VS & B3..VS), stainless steel (B2..VSS), cast iron (B6..VS)
Ball	stainless steel, bronze (1/2")
Stem	stainless steel, bronze (1/2")
Seats	
2-way	MPTFE
3-way	PTFE
Packing	
2-way NPT	RPTFE
2-way flanged	PTFE
3-way	PTFE
Media temp range	
B2..VS, B3..VS, B6..VS	-22°F to +280°F [-30°C to +138°C]
B2..VSS	-22°F to +298°F [-30°C to +148°C]
Body pressure rating	up to 2000 psig WOG
Maximum inlet pressure	
Steam	35 psi B2..VS 50 psi B2..VSS, B6..VS
Leakage	ANSI class VI

067001 - 04/13 - Subject to change. © Belimo Aircontrols (USA), Inc.

FLOW PATTERN

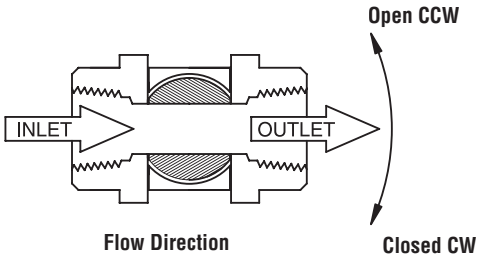

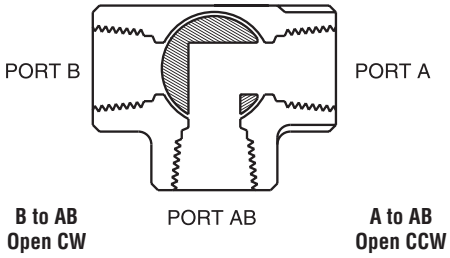

NOTE: B3…VS are piped differently than B3 CCV Valves.

VS SERIES BALL VALVE PIPING DIAGRAMS

2-way Valve Piping Diagram

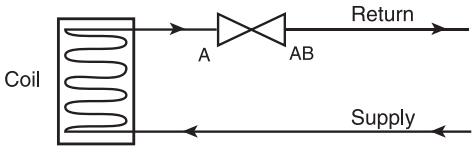

3-way Diverting Valve Piping Diagram

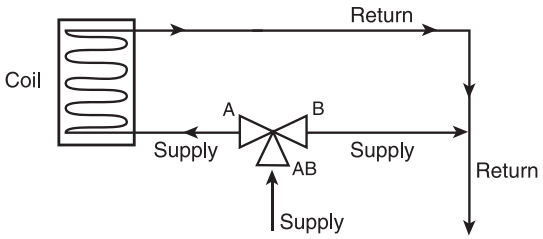

3-way Mixing Valve Piping Diagram
(N.C. TO COIL @ 0 VDC)

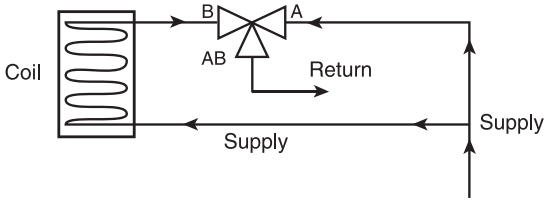

NOTE:
To avoid torque increase during off season shut down, or other periods of inactivity longer than 1 month - the valve should be exercised (actuator or manually driven full open-closed cycle) at least once per month. This is necessary to avoid any application problems after an off season shut down.

PIPING/MOUNTING ORIENTATION

Assembly can be mounted horizontally or vertically for water applications. For steam applications the valve can be mounted vertically but if mounted horizontally the valve must be 90° off center of the pipe. Do not install with actuator below pipe.

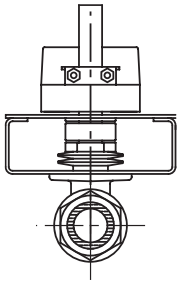

(Water application only)

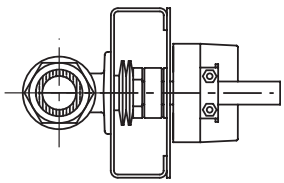

(Steam or water application)



3-way Mixing Valve Piping Diagram
(N.O. TO COIL @ 0 VDC)

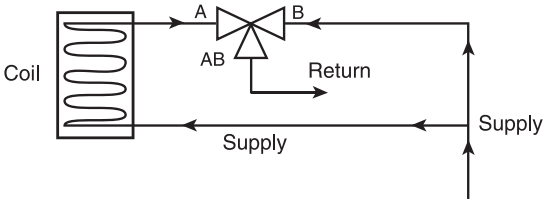

067001 - 04/13 - Subject to change. © Belimo Aircontrols (USA), Inc.

VALVE SIZE	C_V	TYPE	MODEL #	LINE SIZE ¾" Fp Cv	1" Fp Cv	1¼" Fp Cv	1½" Fp Cv	2" Fp Cv	2½" Fp Cv	3" Fp Cv	4" Fp Cv	5" Fp Cv	6" Fp Cv	8" Fp Cv	10" Fp Cv
½"	1	2W NPT	B2050VS-01	1.0	1.0	—	—	—	—	—	—	—	—	—	—
½"	2	2W NPT	B2050VS-02	2.0	1.9	—	—	—	—	—	—	—	—	—	—
½"	4	2W NPT	B2050VS-04	3.8	3.6	—	—	—	—	—	—	—	—	—	—
½"	15	2W NPT	B2050VS-15	8.9	7.2	—	—	—	—	—	—	—	—	—	—
¾"	30	2W NPT	B219VS/VSS	30.0	21.6	17.4	15.6	—	—	—	—	—	—	—	—
¾"	51	2W NPT	B220VS	51.0	26.5	19.9	17.3	—	—	—	—	—	—	—	—
1"	43	2W NPT	B224VS/VSS	—	43.0	36.1	30.5	25.8	—	—	—	—	—	—	—
1"	68	2W NPT	B225VS	—	68.0	48.3	36.7	29.2	—	—	—	—	—	—	—
1¼"	48	2W NPT	B232VS/VSS	—	—	48.0	44.6	37.9	35.0	—	—	—	—	—	—
1½"	84	2W NPT	B239VS/VSS	—	—	—	84.0	69.7	59.6	55.4	—	—	—	—	—
1½"	177	2W NPT	B240VS	—	—	—	177.0	102.7	77.9	67.3	—	—	—	—	—
2"	108	2W NPT	B249VS/VSS	—	—	—	—	108.0	100.4	91.8	83.2	—	—	—	—
2"	389	2W NPT	B250VS	—	—	—	—	389.0	221.7	159.5	124.5	—	—	—	—
2½"	503	2W NPT	B265VS/VSS	—	—	—	—	—	503.0	352.1	221.3	186.1	—	—	—
3"	370	2W NPT	B280VS/VSS	—	—	—	—	—	—	370.0	296.0	251.6	229.4	—	—
½"	5	3W NPT	B315VS	4.4	4.1	—	—	—	—	—	—	—	—	—	—
¾"	11	3W NPT	B320VS	11.0	10.3	9.0	—	—	—	—	—	—	—	—	—
1"	21	3W NPT	B325VS	—	21.0	20.2	18.9	17.6	—	—	—	—	—	—	—
1¼"	33	3W NPT	B332VS	—	—	33.0	32.0	29.0	27.7	—	—	—	—	—	—
1½"	49	3W NPT	B340VS	—	—	—	49.0	45.6	42.6	40.7	—	—	—	—	—
2"	330	2W FLG	B650VS	—	—	—	—	330.0	207.9	155.1	122.1	—	—	—	—
2½"	420	2W FLG	B665VS	—	—	—	—	—	420.0	319.2	214.2	184.8	—	—	—
3"	600	2W FLG	B680VS	—	—	—	—	—	—	600.0	384.0	300.0	264.0	—	—
4"	1200	2W FLG	B6100VS	—	—	—	—	—	—	—	1200.0	804.0	600.0	480.0	—
6"	3300	2W FLG	B6150VS	—	—	—	—	—	—	—	—	—	3300.0	1716.0	1254.0
8"	9000	2W FLG	B6200VS	—	—	—	—	—	—	—	—	—	—	9000.0	3870.0
10"	12400	2W FLG	B6250VS	—	—	—	—	—	—	—	—	—	—	—	12400.0

Note: Not for use in dual temperature applications. Must be used in chilled or hot water applications only.

067001- 04/13 - Subject to change. © Belimo Aircontrols (USA), Inc.

B2...VS Series Ball Valve, Non-Spring Return Actuators

2-way Valve, Bronze Body, NPT Female Ends

BELIMO

Valve Specifications	
Service	chilled or hot water, 60% glycol, 35# steam
Flow characteristic	modified equal percentage
Action	90° rotation valve open CCW, valve closed CW
Sizes	½", ¾", 1", 1¼", 1½", 2", 2½"
End fitting	NPT female ends
Materials:	
Stem Packing	MPTFE
Stem Bearing	RPTFE
Ball	316 stainless steel, B16 chrome plated brass (½")
Seat	MPTFE, RPTFE (½")
Retainer	B16 brass (½" to 1"), B584-C84400 brass (1¼" to 3")
Gland	B16 brass
Stem	A276-316 stainless steel, B316 (½")
Lever Nut	stainless steel
Body Seal	PTFE
Body	B584-C84400
Pressure rating	600 psig WOG
Media temp. range	-22°F to +280°F (-30°C to +138°C)
Maximum differential pressure (ΔP)	100 psi
Leakage	ANSI class VI
C_v rating	see chart below for values

2 YEAR WARRANTY

Non-Spring Return Actuators







ACTUATOR PART #					LMB24-3-X1	NMB24-3-X1	AMB24-3-X1	GMB24-3-X1	2*GMB24-3-X1
Control type					On/Off, Floating Point	On/Off, Floating Point	On/Off, Floating Point	On/Off, Floating Point	On/Off, Floating Point
Manual override					•	•	•	•	•
Running time					95 seconds	90 seconds	95 seconds	135 seconds	135 seconds
Noise level					<35 dB(A)	<45 dB(A)	<45 dB(A)	<45 dB(A)	<45 dB(A)
ELECTRICAL CONNECTION:									
3 ft. cable, ½" conduit fitting					•	•	•	•	•
Ball Valve Model #	**C_v Rating**	**Valve Nominal Size Inches**	**DN mm**	**Close-off psi**					
B2...VS 2-WAY BALL VALVE WITH NON-SPRING RETURN ACTUATORS									
B2050VS-01	1	½	15	100	$578.00				
B2050VS-02	2	½	15	100	$578.00				
B2050VS-04	4	½	15	100	$578.00				
B2050VS-15	15	½	15	100	$578.00				
B219VS	30	¾	20	400		$744.00			
B220VS	51	¾	20	400		$769.00			
B224VS	43	1	25	400		$846.00			
B225VS	68	1	25	200			$956.00		
B232VS	48	1¼	32	400			$1,125.00		
B239VS	84	1½	40	400				$1,351.00	
B240VS	177	1½	40	400				$1,723.00	
B249VS	108	2	50	400				$1,577.00	
B250VS	389	2	50	400					$2,697.00
B265VS	503	2½	65	600					$4,411.00

2* Designates tandem actuators.

067001 - 04/13 - Subject to change. © Belimo Aircontrols (USA), Inc.

Valve Specifications	
Service	chilled or hot water, 60% glycol, 35# steam
Flow characteristic	modified equal percentage
Action	90° rotation valve open CCW, valve closed CW
Sizes	½" ,¾", 1", 1¼", 1½", 2", 2½", 3"
End fitting	NPT female ends
Materials:	
Stem Packing	MPTFE
Stem Bearing	RPTFE
Ball	316 stainless steel
Seat	Reinforced FTFE w/ durafill
Retainer	B16 brass (¾" to 1") B584 brass (1¼" to 3")
Gland	B16 brass
Stem	316 stainless steel
Lever Nut	stainless steel
Body Seal	PTFE
Body	B584-C84400 bronze
Pressure rating	600 psig WOG
Media temp. range	-22°F to +280°F (-30°C to +138°C)
Maximum differential pressure (ΔP)	100 psi
Leakage	ANSI class VI
C_v rating	see chart below for values

2 YEAR WARRANTY

Non-Spring Return Actuators







ACTUATOR PART #					LMX24-MFT-X1	NMX24-MFT-X1	AMX24-MFT-X1	GMX24-MFT-X1	2*GMX24-MFT-X1
Control type					Proportional/MFT	Proportional/MFT	Proportional/MFT	Proportional/MFT	Proportional/MFT
Manual override					•	•	•	•	•
Running time					150 seconds (default) variable 35 to 150 seconds	150 seconds (default) variable 45 to 170 seconds	150 seconds (default) variable 90 to 350 seconds	150 seconds (default) variable 90 to 300 seconds	150 seconds (default) variable 90 to 300 seconds
Noise level					<35 dB(A)	<45 dB(A)	<45 dB(A)	<45 dB(A)	<45 dB(A)
ELECTRICAL CONNECTION:									
3 ft. cable, ½" conduit fitting					•	•	•	•	•
Ball Valve Model #	**C_v Rating**	**Valve Nominal Size Inches**	**DN mm**	**Close-off psi**					
B2...VS 2-WAY BALL VALVE WITH NON-SPRING RETURN ACTUATORS									
B2050VS-01	1	½	15	100	$788.00				
B2050VS-02	2	½	15	100	$788.00				
B2050VS-04	4	½	15	100	$788.00				
B2050VS-15	15	½	15	100	$788.00				
B219VS	30	¾	20	400		$1,080.00			
B220VS	51	¾	20	400		$1,118.00			
B224VS	43	1	25	400		$1,152.00			
B225VS	68	1	25	200			$1,260.00		
B232VS	48	1¼	32	600			$1,392.00		
B239VS	84	1½	40	400				$1,407.00	
B240VS	177	1½	40	400				$1,541.00	
B249VS	108	2	50	400				$1,712.00	
B250VS	389	2	50	400					$2,869.00
B265VS	503	2½	65	400					$4,733.00
B280VS	370	3	80	400					$4,892.00

2* Designates tandem actuators.

MULTI-FUNCTION TECHNOLOGY					
Description	**P-CODE**	**Control Input**	**Running Time**	**Built-in Feedback**	**List Price**
P-10001	A01	2-10 VDC	150 seconds	2-10 VDC	No Charge
P-10002	A02	0-10 VDC	150 seconds	0-10 VDC	No Charge
P-10028	A28	0-10 VDC	100 seconds	0-10 VDC	No Charge
P-10063	A63	0.5-4.5 VDC	150 seconds	0.5-4.5 VDC	No Charge
P-10064	A64	5.5-10 VDC	150 seconds	5.5-10 VDC	No Charge
P-20002	W02	0.02-5.00 seconds PWM	150 seconds	2-10 VDC	No Charge
P-20003	W03	0.10-25.5 seconds PWM	150 seconds	2-10 VDC	No Charge
P-30001	F01	Floating Point	150 seconds	2-10 VDC	No Charge
P-40002	J02	On/Off	150 seconds	2-10 VDC	No Charge

Specify MFT codes when ordering MFT actuators.
Note: Most popular configurations available at no additional cost. All other configurations carry a $34.00 list price.
2* Denotes tandem actuators.

067001- 04/13 - Subject to change. © Belimo Aircontrols (USA), Inc.

B2...VS Series Ball Valve, Spring Return Actuators

2-way Valve, Bronze Body, NPT Female Ends

BELIMO

Valve Specifications

Service	chilled or hot water, 60% glycol, 35# steam
Flow characteristic	modified equal percentage
Action	90° rotation valve open CCW, valve closed CW
Sizes	½", ¾"
End fitting	NPT female ends
Materials:	
Body	B584-C84400 bronze
Ball	316 stainless steel
Stem	316 stainless steel
Seats	MPTFE
Packing	RPTFE
Pressure rating	600 psi WOG
Media temp. range	-22°F to +280°F [-30°C to +138°C]
Maximum differential pressure (ΔP)	100 psi
Leakage	ANSI class VI
C_v rating	see chart below for values

2 YEAR WARRANTY

Visit *www.belimo.us* to see additional Spring Return options.

Spring Return Actuators





ACTUATOR PART #		LF24 US	LF120 US	LF24-MFT US	NFB24-X1	NFX24-MFT- X1
Control type		On/Off	On/Off	Proportional/MFT	On/Off	Proportional/MFT
Manual override					•	•
Running time	Motor	<40 to 75 seconds	<40 to 75 seconds	150 seconds (default) 75 to 300 seconds	<75 seconds	150 seconds (default) 40 to 220 seconds
	Spring	<25 seconds	<25 seconds	<25 seconds	<20 seconds	<20 seconds
Noise level	Motor	<50 dB(A)	<50 dB(A)	<45 dB(A)	<50 dB(A)	<50 dB(A)
	Spring	<62 dB(A)	<62 dB(A)	<62 dB(A)	<62 dB(A)	<62 dB(A)
ELECTRICAL CONNECTION:						
3 ft cable, ½" conduit fitting		•	•	•	•	•

Ball Valve Model #	C_v Rating	Valve Nominal Size Inches	DN mm	Close-off psi					
B2...VS 2-WAY BALL VALVE WITH SPRING RETURN ACTUATORS									
B2050VS-01	1	½	15	100	$625.00	$664.00	$871.00		
B2050VS-02	2	½	15	100	$625.00	$664.00	$871.00		
B2050VS-04	4	½	15	100	$625.00	$664.00	$871.00		
B2050VS-15	15	½	15	100	$625.00	$664.00	$871.00		
B219VS	30	¾	20	400				$849.00	$1,091.00
B220VS	51	¾	20	200				$888.00	$1,132.00

MULTI-FUNCTION TECHNOLOGY

Description	P-CODE	Control Input	Running Time	Built-in Feedback	List Price
P-10001	A01	2-10 VDC	150 seconds	2-10 VDC	No Charge
P-10002	A02	0-10 VDC	150 seconds	0-10 VDC	No Charge
P-10028	A28	0-10 VDC	100 seconds	0-10 VDC	No Charge
P-10063	A63	0.5-4.5 VDC	150 seconds	0.5-4.5 VDC	No Charge
P-10064	A64	5.5-10 VDC	150 seconds	5.5-10 VDC	No Charge
P-20002	W02	0.02-5.00 seconds PWM	150 seconds	2-10 VDC	No Charge
P-20003	W03	0.10-25.5 seconds PWM	150 seconds	2-10 VDC	No Charge
P-30001	F01	Floating Point	150 seconds	2-10 VDC	No Charge
P-40002	J02	On/Off	150 seconds	2-10 VDC	No Charge

Specify MFT codes when ordering MFT actuators.
Note: Most popular configurations available at no additional cost. All other configurations carry a $34.00 list price.

067001 - 04/13 - Subject to change. © Belimo Aircontrols (USA), Inc.

Valve Specifications

Service	chilled or hot water, 60% glycol, 35# steam
Flow characteristic	modified equal percentage
Action	90° rotation valve open CCW, valve closed CW
Sizes	1", 1¼", 1½", 2", 2½", 3"
End fitting	NPT female ends
Materials:	
Body	B584-C84400 bronze
Ball	316 stainless steel
Stem	316 stainless steel
Seats	MPTFE
Packing	RPTFE
Pressure rating	600 psi WOG
Media temp. range	-22°F to +280°F [-30°C to +138°C]
Maximum differential pressure (ΔP)	100 psi
Leakage	ANSI class VI
C_v rating	see chart below for values

Visit *www.belimo.us* to see additional Spring Return and Electronic Fail-Safe options.

2 YEAR WARRANTY

Spring Return and Electronic Fail-Safe Actuators







ACTUATOR PART #		AFB24-X1	AFBUP-X1	AFX24-MFT-X1	2*AFB24-X1	2*AFBUP-X1	2*AFX24-MFT-X1	2*GKX24-MFT-X1
Control type		On/Off	On/Off	Proportional/ MFT	On/Off	On/Off	Proportional/ MFT	Proportional/MFT
Manual override		•	•	•	•	•		
Running time	Motor	<75 seconds	<75 seconds	150 seconds (default) variable 70 to 150 seconds	<75 seconds	<75 seconds	150 seconds (default) variable 70 to 150 seconds	150 seconds (default) variable 90 to 150 seconds
	Spring	<20 seconds	<20 seconds	<20 seconds	<20 seconds	<20 seconds	<20 seconds	35 seconds
Noise level		<45 dB(A)	<45 dB(A)	<45 dB(A)	<45 dB(A)	<45 dB(A)	<45 dB(A)	<45 dB(A)
ELECTRICAL CONNECTION:								
3 ft cable, ½" conduit fitting		•	•	•	•	•		•
120 VAC power supply			•			•		

Ball Valve Model #	C_v Rating	Valve Nominal Size Inches	DN mm	Close-off psi						
B2...VS 2-WAY BALL VALVE WITH SPRING RETURN AND ELECTRONIC FAIL-SAFE ACTUATORS										
B224VS	43	1	25	400	$958.00	$1,023.00	$1,193.00			
B225VS	68	1	25	600	$1,144.00	$1,208.00	$1,318.00			
B232VS	48	1¼	32	200	$1,210.00	$1,272.00	$1,394.00			
B239VS	84	1½	40	400				$1,811.00	$1,935.00	$2,141.00
B240VS	177	1½	40	600						$2,212.00
B249VS	108	2	50	200				$2,049.00	$2,172.00	$2,394.00
B250VS	389	2	50	600						$3,874.00
B265VS	503	2½	65	600						$5,835.00
B280VS	370	3	80	400						$6,142.00

MULTI-FUNCTION TECHNOLOGY

Description	P-CODE	Control Input	Running Time	Built-in Feedback	List Price
P-10001	A01	2-10 VDC	150 seconds	2-10 VDC	No Charge
P-10002	A02	0-10 VDC	150 seconds	0-10 VDC	No Charge
P-10028	A28	0-10 VDC	100 seconds	0-10 VDC	No Charge
P-10063	A63	0.5-4.5 VDC	150 seconds	0.5-4.5 VDC	No Charge
P-10064	A64	5.5-10 VDC	150 seconds	5.5-10 VDC	No Charge
P-20002	W02	0.02-5.00 seconds PWM	150 seconds	2-10 VDC	No Charge
P-20003	W03	0.10-25.5 seconds PWM	150 seconds	2-10 VDC	No Charge
P-30001	F01	Floating Point	150 seconds	2-10 VDC	No Charge
P-40002	J02	On/Off	150 seconds	2-10 VDC	No Charge

Specify MFT codes when ordering MFT actuators.
Note: Most popular configurations available at no additional cost. All other configurations carry a $34.00 list price.
2* Denotes tandem actuators.

067001- 04/13 - Subject to change. © Belimo Aircontrols (USA), Inc.

B3...VS Series Ball Valve, Non-Spring Return Actuators

3-way Valve, Bronze Body, NPT Female Ends

BELIMO

Valve Specifications

Service	chilled or hot water, 60% glycol
Flow characteristic	modified equal percentage
Action	90° rotation (A to AB open CCW, B to AB open CW)
Sizes	½", ¾", 1", 1¼", 1½"
End fitting	NPT female ends
Materials:	
Body	B584-C84400 bronze
Ball	B16
Stem	B16
Seats	PTFE
Packing	PTFE
Pressure rating	400 psig WOG
Media temp. range	-22°F to +280°F [-30°C to +138°C]
Maximum differential pressure (ΔP)	100 psi
Leakage	ANSI class VI
C_v rating	see chart below for values

2 YEAR WARRANTY

Non-Spring Return Actuators







ACTUATOR PART #	NMB24-3-X1	NMX24-MFT-X1	AMB24-3-X1	AMX24-MFT-X1	GMB24-3-X1	GMX24-MFT-X1
Control type	On/Off, Floating Point	Proportional/MFT	On/Off, Floating Point	Proportional/MFT	On/Off, Floating Point	Proportional/MFT
Manual override	•	•	•	•	•	•
Running time	90 seconds	150 seconds (default) variable 45 to 170 seconds	95 seconds	150 seconds (default) variable 90 to 350 seconds	135 seconds	150 seconds (default) variable 90 to 300 seconds
Noise level	<45 dB(A)	<45 dB(A)	<45 dB(A)	<45 dB(A)	<45 dB(A)	<45 dB(A)
ELECTRICAL CONNECTION:						
3 ft. cable, ½" conduit fitting	•	•	•	•	•	•

Ball Valve Model #	C_v Rating	Valve Nominal Size Inches	DN mm	Close-off psi					
B3...VS 3-WAY BALL VALVE WITH NON-SPRING RETURN ACTUATORS									
B315VS	4.8	½	15	200	$693.00	$1,041.00			
B320VS	11	¾	20	200			$865.00	$1,150.00	
B325VS	21	1	25	200					$1,278.00	$1,543.00
B332VS	33	1¼	32	200					$1,546.00	$1,728.00
B340VS	49	1½	40	200					$1,811.00	$1,849.00

Dual mounted actuators use standard run time only (no reprogramming of standard run time allowed).
Specify MFT codes when ordering MFT actuators.
Note: Not for use in dual temperature applications. Must be used in chilled or hot water applications only.

067001 - 04/13 - Subject to change. © Belimo Aircontrols (USA), Inc.

Valve Specifications

Service	chilled or hot water, 60% glycol
Flow characteristic	modified equal percentage
Action	90° rotation (A to AB open CCW, B to AB open CW)
Sizes	1½"
End fitting	NPT female ends
Materials:	
Stem Packing	MPTFE
Stem Bearing	RPTFE
Ball	316 stainless steel
Seats	PTFE
Retainer	brass B584
Gland	ASTM B16 brass
Stem	316 stainless steel
Body Seal	PTFE
Body	B854-C84400 bronze
Pressure rating	400 psig WOG
Media temp. range	-22°F to +280°F [-30°C to +138°C]
Maximum differential pressure (ΔP)	100 psi
Leakage	ANSI class VI
C_v rating	see chart below for values

2 YEAR WARRANTY

Electronic Fail-Safe Actuators



ACTUATOR PART #		GKB24-3-X1	GKX24-MFT-X1
Control type		On/Off	Proportional/MFT
Manual override		•	•
Running time	Motor	150 seconds	150 seconds (default) 90 to 150 seconds
	Fail-Safe	35 seconds	35 seconds
Noise level		<45 dB(A)	<45 dB(A)
ELECTRICAL CONNECTION:			
3 ft. cable, ½" conduit fitting		•	•

Ball Valve Model #	C_v Rating	Valve Nominal Size Inches	DN mm	Close-off psi		
B3...VS 3-WAY BALL VALVE WITH ELECTRONIC FAIL-SAFE ACTUATORS						
B340VS	49	1½	40	200	$2,666.00	$2,724.00

Note: Specify configuration.

MULTI-FUNCTION TECHNOLOGY

Description	P-CODE	Control Input	Running Time	Built-in Feedback	List Price
P-10001	A01	2-10 VDC	150 seconds	2-10 VDC	No Charge
P-10002	A02	0-10 VDC	150 seconds	0-10 VDC	No Charge
P-10028	A28	0-10 VDC	100 seconds	0-10 VDC	No Charge
P-10063	A63	0.5-4.5 VDC	150 seconds	0.5-4.5 VDC	No Charge
P-10064	A64	5.5-10 VDC	150 seconds	5.5-10 VDC	No Charge
P-20002	W02	0.02-5.00 seconds PWM	150 seconds	2-10 VDC	No Charge
P-20003	W03	0.10-25.5 seconds PWM	150 seconds	2-10 VDC	No Charge
P-30001	F01	Floating Point	150 seconds	2-10 VDC	No Charge
P-40002	J02	On/Off	150 seconds	2-10 VDC	No Charge

Specify MFT codes when ordering MFT actuators.
Most popular configurations available at no additional cost. All other configurations carry a $34.00 list price.
For tandem actuators – only one of the two actuators is provided with switch.
Note: Not for use in dual temperature applications. Must be used in chilled or hot water applications only.

067001- 04/13 - Subject to change. © Belimo Aircontrols (USA), Inc.

B3...VS Series Ball Valve, Spring Return Actuators

3-way Valve, Bronze Body, NPT Female Ends

BELIMO

Valve Specifications	
Service	chilled or hot water, 60% glycol
Flow characteristic	modified equal percentage
Action	90° rotation (A to AB open CCW, B to AB open CW)
Sizes	½", ¾", 1", 1¼", 1½"
End fitting	NPT female ends
Materials:	
Stem Packing	PTFE
Stem Bearing	RPTFE
Ball	316 stainless steel
Seats	MPTFE
Retainer	B16 brass (½" to 1") B584 brass (1¼" to 1½")
Gland	ASTM B16 brass
Stem	316 stainless steel
Body Seal	TFE
Body	B854-C84400 bronze
Pressure rating	400 psig WOG
Media temp. range	-22°F to +280°F [-30°C to +138°C]
Maximum differential pressure (ΔP)	100 psi
Leakage	ANSI class VI
C_v rating	see chart below for values

2 YEAR WARRANTY

Visit *www.belimo.us* to see additional Spring Return options.

Spring Return Actuators







ACTUATOR PART #		NFB24-X1	NFX24-MFT-X1	AFB24-X1	AFX24-MFT-X1	AFX24-MFT95-X1	2*AFB24-X1	2*AFX24-MFT-X1	2*AFX24-MFT95-X1
Control type		On/Off	Proportional/ MFT	On/Off	Proportional/ MFT	Proportional/ MFT95	On/Off	Proportional/ MFT	Proportional/ MFT
Manual override		•	•	•	•	•	•	•	•
Running time	Motor	75 seconds	150 seconds (default) variable 40 to 220 seconds	75 seconds	150 seconds (default) variable 70 to 220 seconds	150 seconds (default) variable 70 to 220 seconds	75 seconds	150 seconds (default) variable 70 to 150 seconds	150 seconds (default) variable 70 to 150 seconds
	Spring	<20 seconds	<20 seconds	<20 seconds	<20 seconds	<20 seconds	<20 seconds	<20 seconds	<20 seconds
Noise level		<45 dB(A)	<45 dB(A)	<45 dB(A)	<45 dB(A)	<45 dB(A)	<45 dB(A)	<45 dB(A)	<45 dB(A)
ELECTRICAL CONNECTION:									
3 ft. cable, ½" conduit fitting		•	•	•	•	•	•	•	•

Ball Valve Model #	C_v Rating	Valve Nominal Size Inches	DN mm	Close-off psi							
B3...VS 3-WAY BALL VALVE WITH SPRING RETURN ACTUATORS											
B315VS	4.8	½	15	200	$769.00	$1,072.00					
B320VS	11	¾	20	200			$940.00	$1,223.00	$1,246.00		
B325VS	21	1	25	200						$1,701.00	$1,903.00	$2,383.00
B332VS	33	1¼	32	200						$1,898.00	$2,180.00	$2,205.00
B340VS	49	1½	40	200							$2,386.00	$2,328.00

Note: Specify configuration.

MULTI-FUNCTION TECHNOLOGY					
Description	P-CODE	Control Input	Running Time	Built-in Feedback	List Price
P-10001	A01	2-10 VDC	150 seconds	2-10 VDC	No Charge
P-10002	A02	0-10 VDC	150 seconds	0-10 VDC	No Charge
P-10028	A28	0-10 VDC	100 seconds	0-10 VDC	No Charge
P-10063	A63	0.5-4.5 VDC	150 seconds	0.5-4.5 VDC	No Charge
P-10064	A64	5.5-10 VDC	150 seconds	5.5-10 VDC	No Charge
P-20002	W02	0.02-5.00 seconds PWM	150 seconds	2-10 VDC	No Charge
P-20003	W03	0.10-25.5 seconds PWM	150 seconds	2-10 VDC	No Charge
P-30001	F01	Floating Point	150 seconds	2-10 VDC	No Charge
P-40002	J02	On/Off	150 seconds	2-10 VDC	No Charge

Specify MFT codes when ordering MFT actuators.
Note: Most popular configurations available at no additional cost. All other configurations carry a $34.00 list price.
2* Designates tandem actuators.
Note: Not for use in dual temperature applications. Must be used in chilled or hot water applications only.

067001 - 04/13 - Subject to change. © Belimo Aircontrols (USA), Inc.

Valve Specifications

Service	chilled or hot water, 60% glycol, 35# steam
Flow characteristic	modified equal percentage
Action	90° rotation valve open CCW, valve closed CW
Sizes	½", ¾", 1", 1¼", 1½", 2", 2½", 3"
End fitting	NPT female ends
Materials:	
Stem Packing	MPTFE
Stem Bearing	RPTFE
Ball	316 stainless steel
Seats	MPTFE
Retainer	B16 brass (½" to 1") B584 brass (1¼" to 3")
Gland	B16 brass
Stem	316 stainless steel
Lever Nut	stainless steel
Body Seal	PTFE brass
Body	B584-C84400 bronze
Pressure Rating	600 psig WOG
Media temp. range	-22°F to +280°F [-30°C to +138°C]
Maximum differential pressure (ΔP)	100 psi
Leakage	ANSI class VI
C_v rating	see chart below for values

2 YEAR WARRANTY

Non-Spring Return Actuators







ACTUATOR PART #					SY1-24, SY1-110, SY1-220	SY1-24P, SY1-110P, SY1-220P	SY2-24, SY2-110, SY2-230	SY2-24MFT SY2-120MFT SY2-230MFT	SY3-24 SY3-110 SY3-230	SY3-24MFT SY3-120MFT SY3-230MFT
Control type					On/Off, Floating Point	Proportional	On/Off, Floating Point	Proportional/MFT	On/Off, Floating Point	Proportional/MFT
Manual override					•	•	•	•	•	•
Running time					15, 12, 12 seconds	15, 13, 13 seconds	15 seconds	15, 17, 17 seconds	22 seconds	22,26, 26 seconds
ELECTRICAL CONNECTION:										
2 (two), ½" conduit fittings / covered terminal strip					•	•	•	•	•	•
		Valve Nominal Size								
Ball Valve Model #	C_v Rating	Inches	DN mm	Close-off psi						
B2...VS 2-WAY BALL VALVE WITH NON-SPRING RETURN ACTUATORS										
B2050VS-01	1	½	15	600	$1,373.00	$3,569.00				
B2050VS-02	2	½	15	600	$1,373.00	$3,569.00				
B2050VS-04	4	½	15	600	$1,373.00	$3,569.00				
B2050VS-15	15	½	15	600	$1,373.00	$3,569.00				
B219VS	30	¾	20	600	$1,522.00	$3,697.00	$2,873.00	$5,250.00		
B220VS	51	¾	20	600	$1,543.00	$3,718.00	$2,896.00	$5,272.00		
B224VS	43	1	25	600	$1,570.00	$3,740.00	$2,919.00	$5,295.00		
B225VS	68	1	25	600	$1,587.00	$3,759.00	$3,036.00	$5,413.00		
B232VS	48	1¼	32	600	$1,723.00	$3,898.00	$3,172.00	$5,552.00		
B239VS	84	1½	40	600	$1,784.00	$3,964.00	$3,239.00	$5,616.00		
B240VS	177	1½	40	600	$1,855.00	$4,123.00	$3,311.00	$5,689.00		
B249VS	108	2	50	600			$3,503.00	$5,877.00		
B250VS	389	2	50	600			$3,869.00	$6,212.00		
B265VS	503	2½	65	600			$5,845.00	$8,220.00		
B280VS	370	3	80	600					$6,008.00	$8,382.00

Note: Specify configuration.

SY MULTI-FUNCTION TECHNOLOGY

Description	P-CODE	Control Input	Built-in Feedback	Loss of Signal	Running Time	List Price
MFT	ACE	2-10 VDC	2-10 VDC	stop	actuator(s) constant	No Charge
MFT	ACF	0.5-10 VDC	0.5-10 VDC	stop	actuator(s) constant	No Charge
MFT	ACG	4-20mA	4-20mA	stop	actuator(s) constant	No Charge
MFT	ACH	4-20mA	2-10 VDC	stop	actuator(s) constant	No Charge
MFT	W3E	0.02-5.00 seconds PWM*	2-10 VDC	stop	actuator(s) constant	No Charge
MFT	ACJ	2-10 VDC	2-10 VDC	open	actuator(s) constant	No Charge
MFT	ACK	0.5-10 VDC	0.5-10 VDC	open	actuator(s) constant	No Charge
MFT	ACL	4-20mA	4-20mA	open	actuator(s) constant	No Charge
MFT	ACM	4-20mA	2-10 VDC	open	actuator(s) constant	No Charge
MFT	ACN	2-10 VDC	2-10 VDC	close	actuator(s) constant	No Charge
MFT	ACP	0.5-10 VDC	0.5-10 VDC	close	actuator(s) constant	No Charge
MFT	ACR	4-20mA	4-20mA	close	actuator(s) constant	No Charge
MFT	ACS	4-20mA	2-10 VDC	close	actuator(s) constant	No Charge

Most popular configurations are available at no additional cost. All other configurations carry a $34.00 list price.
Standard delivery may vary, please consult your customer service representative for the latest lead time(s).

Specify MFT codes when ordering MFT actuators.
*Available only on 24-MFT actuators.

067001- 04/13 - Subject to change. © Belimo Aircontrols (USA), Inc.

B2...VSS Series Ball Valve, Non-Spring Return Actuators

2-way Valve, Stainless Steel Body, NPT Female Ends

BELIMO

Valve Specifications

Service	chilled or hot water, 60% glycol, 50# steam
Flow characteristic	modified equal percentage
Action	90° rotation valve open CCW, valve closed CW
Sizes	½", ¾", 1", 1¼", 1½", 2", 2 ½"
End fitting	NPT female ends
Materials:	
Stem Packing	MPTFE
Stem Bearing	RPTFE
Ball	316 stainless steel
Seats	MPTFE
Retainer	B16 brass (½" to 1") B589 brass (1¼" to 2½")
Gland	A276-316
Stem	316 stainless steel
Lever Nut	stainless steel
Body Seal	PTFE
Body	A351-CF8M 316 stainless steel
Pressure rating	2000 psi WOG (½" to 1") 1500 psi WOG (1¼" to 2") 1000 psi WOG (2 ½")
Media temp. range	-22°F to +298°F [-30°C to +148°C]
Maximum differential pressure (ΔP)	100 psi
Leakage	ANSI class VI
C_v rating	see chart below for values

2 YEAR WARRANTY

Non-Spring Return Actuators



ACTUATOR PART #	LMB24-3-X1	LMX24-MFT-X1	NMB24-3-X1	NMX24-MFT-X1	AMB24-3-X1	AMX24-MFT-X1	GMB24-3-X1	GMB24-MFT-X1	2*GMB24-3-X1	2*GMX24-MFT-X1
Control type	On/Off, Floating Point	Proportional/ MFT	On/Off, Floating Point	Proportional/ MFT	On/Off, Floating Point	Proportional/ MFT	On/Off, Floating Point	Proportional/ MFT	On/Off, Floating Point	Proportional/ MFT
Manual override	•	•	•	•	•	•	•	•	•	•
Running time	95 seconds	150 seconds (default) variable 45 to 170 seconds	90 seconds	150 seconds (default) variable 45 to 170 seconds	90 seconds	150 seconds (default) variable 90 to 350 seconds	135 seconds	150 seconds (default) variable 90 to 150 seconds	135 seconds	150 seconds (default) variable 90 to 150 seconds
Noise level	<45 dB(A)	<45 dB(A)	<45 dB(A)	<45 dB(A)	<45 dB(A)	<45 dB(A)	<45 dB(A)	<45 dB(A)	<45 dB(A)	<45 dB(A)
ELECTRICAL CONNECTION:										
3 ft. cable, ½" conduit fitting	•	•	•	•	•	•			•	•

Ball Valve Model #	C_v Rating	Valve Nominal Size Inches	DN mm	Close-off psi								
B2...VSS 2-WAY BALL VALVE WITH NON-SPRING RETURN ACTUATORS												
B2050VSS-15	15	½	15	1000	$751.00	$1,104.00						
B219VSS	30	¾	20	1000			$1,043.00	$1,392.00				
B224VSS	43	1	25	1000					$1,173.00	$1,475.00		
B232VSS	48	1¼	32	1000					$1,616.00	$1,917.00		
B239VSS	84	1½	40	1000							$1,954.00	$2,122.00
B249VSS	108	2	50	1000							$2,280.00	$2,455.00
B265VSS	503	2½	65	200								

MULTI-FUNCTION TECHNOLOGY					
Description	P-CODE	Control Input	Running Time	Built-in Feedback	List Price
P-10001	A01	2-10 VDC	150 seconds	2-10 VDC	No Charge
P-10002	A02	0-10 VDC	150 seconds	0-10 VDC	No Charge
P-10028	A28	0-10 VDC	100 seconds	0-10 VDC	No Charge
P-10063	A63	0.5-4.5 VDC	150 seconds	0.5-4.5 VDC	No Charge
P-10064	A64	5.5-10 VDC	150 seconds	5.5-10 VDC	No Charge
P-20002	W02	0.02-5.00 seconds PWM	150 seconds	2-10 VDC	No Charge
P-20003	W03	0.10-25.5 seconds PWM	150 seconds	2-10 VDC	No Charge
P-30001	F01	Floating Point	150 seconds	2-10 VDC	No Charge
P-40002	J02	On/Off	150 seconds	2-10 VDC	No Charge

Specify MFT codes when ordering MFT actuators.
Note: Most popular configurations available at no additional cost. All other configurations carry a $34.00 list price.
Dual mounted actuators use standard run time only (no reprogramming of standard run time allowed).
2* Designates tandem actuators.

067001 - 04/13 - Subject to change. © Belimo Aircontrols (USA), Inc.

Valve Specifications

Service	chilled or hot water, 60% glycol, 50# steam
Flow characteristic	modified equal percentage
Action	90° rotation valve open CCW, valve close CW
Sizes	½", ¾", 1", 1¼", 1½", 2"
End fitting	NPT female ends
Materials:	
Stem Packing	MPTFE
Stem Bearing	RPTFE
Ball	316 stainless steel
Seats	MPTFE
Retainer	B16 brass (½" to 1") B584 brass (1¼" to 2")
Gland	A276-316
Stem	316 stainless steel
Lever Nut	stainless steel
Body Seal	PTFE
Body	A351-CF8M 316 stainless steel
Pressure rating	2000 psi WOG (½" to 1") 1500 psi WOG (1¼" to 2")
Media temp. range	-22°F to +298°F [-30°C to +148°C]
Maximum differential pressure (ΔP)	100 psi
Leakage	ANSI class VI
C_v rating	see chart below for values

Visit *www.belimo.us* to see additional Spring Return and Electronic Fail-Safe options.

2 YEAR WARRANTY

Spring Return and Electronic Fail-Safe Actuators



ACTUATOR PART #		LF24 US	LF24-MFT US	NFB24-X1	NFX24-MFT-X1	AFB24-X1	AFX24-MFT-X1	2*AFB24-X1	2*AFX24-MFT-X1
Control type		On/Off	Proportional/MFT	On/Off	Proportional/MFT	On/Off	Proportional/MFT	On/Off	Proportional/MFT
Manual override				•	•	•	•	•	•
Running time	Motor	75 seconds	150 seconds (default) variable 75 to 300 seconds	75 seconds	150 seconds (default) variable 40 to 220 seconds	<75 seconds	150 seconds (default) variable 70 to 220 seconds	<75 seconds	150 seconds (default) variable 70 to 220 seconds
	Spring	<25 seconds	<25 seconds	<20 seconds	<20 seconds	<20 seconds	<20 seconds	<20 seconds	<20 seconds
Noise level	Motor	<50 dB(A)	<45 dB(A))	<50 dB(A)	<40 dB(A)	<50 dB(A)	<40 dB(A)	<50 dB(A)	<40 dB(A)
	Spring	<62 dB(A)	<62 dB(A)	<62 dB(A)	<62 dB(A)	<62 dB(A)	<62 dB(A)	<62 dB(A)	<62 dB(A)
ELECTRICAL CONNECTION:									
3 ft. cable, ½" conduit fitting		•	•	•	•	•	•	•	•

Ball Valve Model #	C_v Rating	Valve Nominal Size Inches	DN mm	Close-off psi							
B2...VSS 2-WAY BALL VALVE WITH SPRING RETURN AND ELECTRONIC FAIL-SAFE ACTUATORS											
B2050VSS-15	15	½	15	1000	$782.00	$1,223.00					
B219VSS	30	¾	20	1000			$1,187.00	$1,604.00			
B224VSS	43	1	25	1000					$1,276.00	$1,710.00	
B232VSS	48	1¼	32	1000					$1,784.00	$2,278.00	
B239VSS	84	1½	40	1000							$2,447.00	$3,451.00
B249VSS	108	2	50	600							$2,778.00	$3,627.00

MULTI-FUNCTION TECHNOLOGY

Description	P-CODE	Control Input	Running Time	Built-in Feedback	List Price
P-10001	A01	2-10 VDC	150 seconds	2-10 VDC	No Charge
P-10002	A02	0-10 VDC	150 seconds	0-10 VDC	No Charge
P-10028	A28	0-10 VDC	100 seconds	0-10 VDC	No Charge
P-10063	A63	0.5-4.5 VDC	150 seconds	0.5-4.5 VDC	No Charge
P-10064	A64	5.5-10 VDC	150 seconds	5.5-10 VDC	No Charge
P-20002	W02	0.02-5.00 seconds PWM	150 seconds	2-10 VDC	No Charge
P-20003	W03	0.10-25.5 seconds PWM	150 seconds	2-10 VDC	No Charge
P-30001	F01	Floating Point	150 seconds	2-10 VDC	No Charge
P-40002	J02	On/Off	150 seconds	2-10 VDC	No Charge

Specify MFT codes when ordering MFT actuators.
Note: Most popular configurations available at no additional cost. All other configurations carry a $34.00 list price.
2* Designates tandem actuators.

067001- 04/13 - Subject to change. © Belimo Aircontrols (USA), Inc.

B2...VSS Series Ball Valve, Electronic Fail-Safe Actuators

2-way Valve, Stainless Steel Body, NPT Female Ends

BELIMO

Valve Specifications

Service	chilled or hot water, 60% glycol, 50# steam
Flow characteristic	modified equal percentage
Action	90° rotation valve open CCW, valve close CW
Sizes	2½"
End fitting	NPT female ends
Materials:	
Stem Packing	MPTFE
Stem Bearing	RPTFE
Ball	316 stainless steel
Seats	MPTFE
Retainer	B584 brass
Gland	A276-316
Stem	316 stainless steel
Lever Nut	stainless steel
Body Seal	PTFE
Body	A351-CF8M 316 stainless steel
Pressure rating	1000 psi WOG (2½")
Media temp. range	-22°F to +298°F [-30°C to +148°C]
Maximum differential pressure (ΔP)	100 psi
Leakage	ANSI class VI
C_v rating	see chart below for values

2 YEAR WARRANTY

Electronic Fail-Safe Actuators



ACTUATOR PART #		2*GKX24-MFT-X1
Control type		Proportional/MFT
Manual override		•
Running time	Motor	150 seconds (default) variable 90 to 150 seconds
	Fail-Safe	35 seconds
Noise level		<45 dB(A)
ELECTRICAL CONNECTION:		
3 ft. cable, ½" conduit fitting		•

Ball Valve Model #	C_v Rating	Valve Nominal Size Inches	DN mm	Close-off psi	
B2...VSS 2-WAY BALL VALVE WITH ELECTRONIC FAIL-SAFE ACTUATORS					
B265VSS	503	2½	65	200	$6,919.00

MULTI-FUNCTION TECHNOLOGY

Description	P-CODE	Control Input	Running Time	Built-in Feedback	List Price
P-10001	A01	2-10 VDC	150 seconds	2-10 VDC	No Charge
P-10002	A02	0-10 VDC	150 seconds	0-10 VDC	No Charge
P-10028	A28	0-10 VDC	100 seconds	0-10 VDC	No Charge
P-10063	A63	0.5-4.5 VDC	150 seconds	0.5-4.5 VDC	No Charge
P-10064	A64	5.5-10 VDC	150 seconds	5.5-10 VDC	No Charge
P-20002	W02	0.02-5.00 seconds PWM	150 seconds	2-10 VDC	No Charge
P-20003	W03	0.10-25.5 seconds PWM	150 seconds	2-10 VDC	No Charge
P-30001	F01	Floating Point	150 seconds	2-10 VDC	No Charge
P-40002	J02	On/Off	150 seconds	2-10 VDC	No Charge

Specify MFT codes when ordering MFT actuators.
Note: Most popular configurations available at no additional cost. All other configurations carry a $34.00 list price.
2* Denotes tandem actuators.

067001 - 04/13 - Subject to change. © Belimo Aircontrols (USA), Inc.

Valve Specifications

Service	chilled or hot water, 60% glycol, 50# steam
Flow characteristic	modified equal percentage
Action	90° rotation valve open CCW, valve closed CW
Sizes	½", ¾", 1", 1¼", 1½", 2", 2 ½", 3"
End fitting	NPT female ends
Materials:	
Stem Packing	MPTFE
Stem Bearing	RPTFE
Ball	316 stainless steel
Seats	MPTFE
Retainer	B16 brass (½" to 1") B584 brass (1¼" to 3")
Gland	B16 brass
Stem	316 stainless steel
Lever Nut	stainless steel
Body Seal	PTFE
Body	A351-CF8M 316 stainless steel
Pressure rating	2000 psi WOG (½" to 1") 1500 psi WOG (1¼" to 2") 1000 psi WOG (2 ½" to 3")
Media temp. range	-22°F to +298°F [-30°C to +148°C]
Maximum differential pressure (ΔP)	100 psi
Leakage	ANSI class VI
C_v rating	see chart below for values

2 YEAR WARRANTY

Non-Spring Return Actuators







ACTUATOR PART #					SY1-24 SY1-110 SY1-220	SY1-24P SY1-110P SY1-220P	SY2-24, SY2-110, SY2-220	SY2-24MFT, SY2-120MFT, SY2-230MFT	SY3-24, SY3-110, SY3-220	SY3-24MFT, SY3-120MFT, SY3-230MFT
Control type					On/Off, Floating Point	Proportional	On/Off, Floating Point	Floating Point	On/Off, Floating Point	Floating Point
Manual override					•	•	•	•	•	•
Running time					15, 12, 12 seconds	15, 13, 13 seconds	15 seconds	15, 17, 17 seconds	22 seconds	22,26, 26 seconds
ELECTRICAL CONNECTION:										
2 (two), ½" conduit fittings / covered terminal strip					•	•	•	•		
Ball Valve Model #	**C_v Rating**	**Valve Nominal Size Inches**	**DN mm**	**Close-off psi**						
B2...VSS 2-WAY BALL VALVE WITH NON-SPRING RETURN ACTUATORS										
B2050VSS-15	15	½	15	1000	$1,579.00	$3,755.00				
B219VSS	30	¾	20	1000	$1,805.00	$3,980.00	$3,156.00	$5,529.00		
B224VSS	43	1	25	1000	$1,894.00	$4,069.00	$3,243.00	$5,619.00		
B232VSS	48	1¼	32	1000	$2,330.00	$4,504.00	$3,780.00	$6,157.00		
B239VSS	84	1½	40	1000	$2,458.00	$4,635.00	$3,909.00	$6,288.00		
B249VSS	108	2	50	1000			$4,250.00	$6,623.00		
B265VSS	503	2½	65	1000					$8,288.00	$10,610.00
B280VSS	370	3	80	1000					$8,896.00	$11,214.00

Note: Specify configuration.

SY MULTI-FUNCTION TECHNOLOGY

Description	P-CODE	Control Input	Built-in Feedback	Loss of Signal	Running Time	List Price
MFT	ACE	2-10 VDC	2-10 VDC	stop	actuator(s) constant	No Charge
MFT	ACF	0.5-10 VDC	0.5-10 VDC	stop	actuator(s) constant	No Charge
MFT	ACG	4-20mA	4-20mA	stop	actuator(s) constant	No Charge
MFT	ACH	4-20mA	2-10 VDC	stop	actuator(s) constant	No Charge
MFT	W3E	0.02-5.00 seconds PWM*	2-10 VDC	stop	actuator(s) constant	No Charge
MFT	ACJ	2-10 VDC	2-10 VDC	open	actuator(s) constant	No Charge
MFT	ACK	0.5-10 VDC	0.5-10 VDC	open	actuator(s) constant	No Charge
MFT	ACL	4-20mA	4-20mA	open	actuator(s) constant	No Charge
MFT	ACM	4-20mA	2-10 VDC	open	actuator(s) constant	No Charge
MFT	ACN	2-10 VDC	2-10 VDC	close	actuator(s) constant	No Charge
MFT	ACP	0.5-10 VDC	0.5-10 VDC	close	actuator(s) constant	No Charge
MFT	ACR	4-20mA	4-20mA	close	actuator(s) constant	No Charge
MFT	ACS	4-20mA	2-10 VDC	close	actuator(s) constant	No Charge

Most popular configurations are available at no additional cost. All other configurations carry a $34.00 list price.
Standard delivery may vary, please consult your customer service representative for the latest lead time(s).

Specify MFT codes when ordering MFT actuators.
*Available only on 24-MFT actuators.

067001- 04/13 - Subject to change. © Belimo Aircontrols (USA), Inc.

B6...VS Series Ball Valve, Non-Spring Return Actuators

2-way Valve, Cast Iron Flanged Body with NEMA 4X Industrial Style Actuators

BELIMO

Valve Specifications

Service	chilled or hot water, 60% glycol, 50# steam
Flow characteristic	modified equal percentage
Action	90° rotation valve open CCW, valve closed CW
Sizes	2", 2½", 3", 4", 6", 8", 10"
End fitting	flanged 125# ANSI bolt pattern
Materials:	
Body	cast iron - ASTM A126 class B
Ball	304 stainless steel - ASTM A351
Stem	304 stainless steel - AISI 304
Seats	MPTFE
Packing	PTFE
Gland	cast iron - ASTM A126 class B
Gasket	PTFE
Lever Nut	steel - ASTM A6
Pressure rating	200 psi WOG
Media temp. range	-22°F to +280°F [-30°C to +138°C]
Maximum differential pressure (ΔP)	200 psi
Leakage	ANSI class VI
C_v rating	see chart below for values

2 YEAR WARRANTY

Non-Spring Return Actuators







ACTUATOR PART #					SY2-24, SY2-110, SY2-220	SY3-24, SY3-120, SY3-230	SY4-24, SY4-110, SY4-220	SY5-24, SY5-110, SY5-220	SY8-120, SY8-230
Control type					On/Off, Floating Point	On/Off, Floating Point	On/Off, Floating Point	On/Off, Floating Point	On/Off, Floating Point
Manual override					•	•	•	•	•
Running time					15 seconds	22 seconds	16 seconds	22 seconds	46 seconds
ELECTRICAL CONNECTION:									
2 (two), ½" conduit fittings / covered terminal strip					•	•	•	•	•
		Valve Nominal Size							
Ball Valve Model #	**C_v Rating**	**Inches**	**DN mm**	**Close-off psi**					
B6...VS 2-WAY BALL VALVE WITH NON-SPRING RETURN ACTUATORS									
B650VS	330	2	50	200	$4,482.00				
B665VS	420	2½	65	200	$4,637.00				
B680VS	600	3	80	200		$4,790.00			
B6100VS	1200	4	100	200			$6,095.00		
B6150VS	3300	6	150	200				$12,293.00	
B6200VS	9000	8	203	200					$16,446.00
B6250VS	12400	10	254	200					$39,295.00

067001 - 04/13 - Subject to change. © Belimo Aircontrols (USA), Inc.

Valve Specifications

Service	chilled or hot water, 60% glycol, 50# steam
Flow characteristic	modified equal percentage
Action	90° rotation valve open CCW, valve closed CW
Sizes	2", 2½", 3", 4", 6", 8", 10"
End fitting	flanged 125# ANSI bolt pattern
Materials:	
Body	cast iron - ASTM A126 class B
Ball	304 stainless steel - ASTM A351
Stem	304 stainless steel - AISI 304
Seats	MPTFE
Packing	PTFE
Gland	cast iron - ASTM A126 class B
Gasket	PTFE
Lever Nut	steel - ASTM A6
Pressure rating	200 psi WOG
Media temp. range	-22°F to +250°F [-30°C to +120°C]
Maximum differential pressure (ΔP)	200 psi
Leakage	ANSI class VI
C_v rating	see chart below for values

2 YEAR WARRANTY

Non-Spring Return Actuators







ACTUATOR PART #					SY2-24MFT, SY2-120MFT, SY2-230MFT	SY3-24MFT, SY3-120MFT, SY3-230MFT	SY4-24MFT, SY4-120MFT, SY4-230MFT	SY5-24MFT, SY5-120MFT, SY5-230MFT	SY8-120MFT, SY8-230MFT
Control type					Proportional/MFT	Proportional/MFT	Proportional/MFT	Proportional/MFT	Proportional/MFT
Manual override					•	•	•	•	•
Running time					15, 17, 17 seconds	22, 22, 26 seconds	16, 18, 18 seconds	25, 25, 22 seconds	55 seconds
ELECTRICAL CONNECTION:									
2 (two), ½" conduit fittings / covered terminal strip					•	•	•	•	•
		Valve Nominal Size							
Ball Valve Model #	C_v Rating	Inches	DN mm	Close-off psi					
B6...VS 2-WAY BALL VALVE WITH NON-SPRING RETURN ACTUATORS									
B650VS	330	2	50	200	$6,774.00				
B665VS	420	2½	65	200	$7,011.00				
B680VS	600	3	80	200		$7,114.00			
B6100VS	1200	4	100	200			$8,981.00		
B6150VS	3300	6	150	200				$14,620.00	
B6200VS	9000	8	203	200					$18,038.00
B6250VS	12400	10	254	200					$41,469.00

SY MULTI-FUNCTION TECHNOLOGY

Description	P-CODE	Control Input	Built-in Feedback	Loss of Signal	Running Time	List Price
MFT	ACE	2-10 VDC	2-10 VDC	stop	actuator(s) constant	No Charge
MFT	ACF	0.5-10 VDC	0.5-10 VDC	stop	actuator(s) constant	No Charge
MFT	ACG	4-20mA	4-20mA	stop	actuator(s) constant	No Charge
MFT	ACH	4-20mA	2-10 VDC	stop	actuator(s) constant	No Charge
MFT	W3E	0.02-5.00 seconds PWM*	2-10 VDC	stop	actuator(s) constant	No Charge
MFT	ACJ	2-10 VDC	2-10 VDC	open	actuator(s) constant	No Charge
MFT	ACK	0.5-10 VDC	0.5-10 VDC	open	actuator(s) constant	No Charge
MFT	ACL	4-20mA	4-20mA	open	actuator(s) constant	No Charge
MFT	ACM	4-20mA	2-10 VDC	open	actuator(s) constant	No Charge
MFT	ACN	2-10 VDC	2-10 VDC	close	actuator(s) constant	No Charge
MFT	ACP	0.5-10 VDC	0.5-10 VDC	close	actuator(s) constant	No Charge
MFT	ACR	4-20mA	4-20mA	close	actuator(s) constant	No Charge
MFT	ACS	4-20mA	2-10 VDC	close	actuator(s) constant	No Charge

Most popular configurations are available at no additional cost. All other configurations carry a $34.00 list price.
Standard delivery may vary, please consult your customer service representative for the latest lead time(s).
Specify MFT codes when ordering MFT actuators.
*Consult factory.

067001- 04/13 - Subject to change. © Belimo Aircontrols (USA), Inc.

This Page
Intentionally Left Blank

067001- 04/13 - Subject to change. © Belimo Aircontrols (USA), Inc.

12 V BALL CONTROL VALVES

- High performance carbon steel bodies ANSI class 150 and 300.
- Fluid temperatures up to 400°F; ideal for chilled, hot water or steam applications.
- Fitted with damper type actuators for easy field assembly and installation.
- Field replaceable seats and stem packing.
- Wide C_V ranges comparable to globe valves.
- 300:1 rangeability.

Applications

Available with mechanical fail-safe, electronic fail and non-fail-safe actuators, the V ball control valves are ideal for aggressive applications. The hardened chrome plated stainless steel ball allows these valves to be used for high pressure and high temperature applications. For wet locations we offer NEMA 4X industrial actuators and also weather tight accessories.

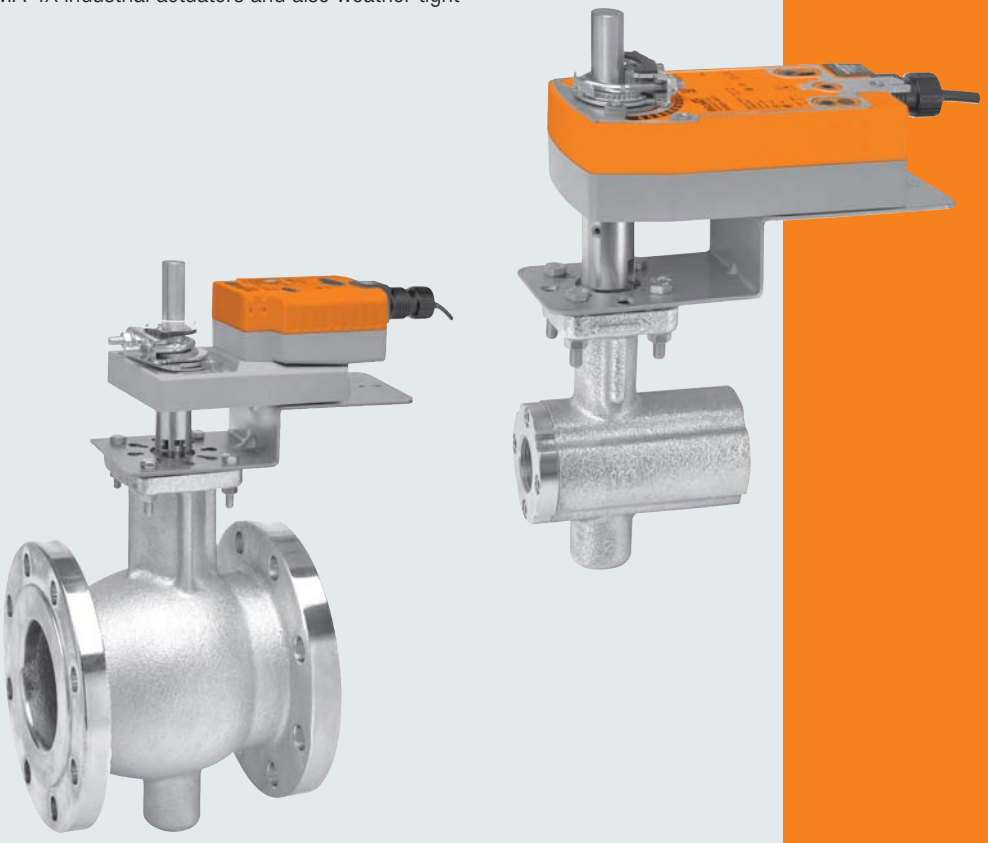

V Ball Valve Nomenclature

B2	100	VB	-024	AMX	24	-MFTX1	
Valve B2 = 2-way B6 = 2-way Flanged	**Valve Size** 12-80 = 1" to 2" 50-250 = 3" to 6" (Flanged)	**Industrial Construction/ Material** VB = Chrome plated stainless steel V ball	**Cv**	**Actuator Type** Non-Spring Return AM… GM… SY… SY…P Spring Return NF… AF… Electronic Fail-Safe GK…	**Power Supply** 24 = 24 VAC/DC 120 = 120 VAC 230 = 230 VAC	**Control** -3-X1 = On/Off, Floating Point -MFT-X1 = Multi-Function Technology -MFT95-1X = 0-135 Ω	-S = Built-in Auxiliary Switch

Ordering Example

1 Choose the valve actuator combination.

B2100VB-024+AMX24-MFT-X1

2 Specify preference or configuration.

3 **For MFT orders only - select programming code**

+NO **+Tagging (if needed)**

4 Does order require tagging?

Set-Up

Non-Spring Models
NO = Normally Open
NC = Normally Closed

Spring Return Models
NO/FO = Normally Open/Fail Open
NO/FC = Normally Open/Fail Closed

NC/FO = Normally Closed/Fail Open
NC/FC = Normally Closed/Fail Closed

Refers to valve ports A to AB.

P-10001 (A01)

P-100xx (Axx)	Control voltage applications
P-200xx (Wxx)	Pulse width modulation applications
P-300xx (Fxx)	Floating Point applications
P-400xx (Jxx)	On/Off applications
X-XXXXX	Create custom MFT configuration code
X-XXXXX	Create custom MFT configuration in the field with MFT-actuator PC software

Tagging:
Valves may be tagged per customer specification. ($10.00 per tag)

Example:
AHU-1
FCU-2

Part number for tagging:
99981-00101

5 Complete Ordering Example: B2100VB-024+AMX24-MFT-X1+NO+A01

V Ball Control Valve Product Range

V Ball Valve Product Range
B2.., B6..

	Valve Nominal Size		Type		Suitable Actuators		
C_V	Inches	DN [mm]	2-way NPT	2-way Flange	Non-Spring Return	Spring Return	Electronic Fail-Safe
024	1	25	B2100VB-024		SY Series, AM Series	NF Series	
055	1½	40	B2150VB-055		SY Series, AM Series	NF Series	
077	2	50	B2200VB-077		SY Series, AM Series	AF	
207	3	80		B6300VB-207	SY Series, AM Series	AF	GK Series
350	4	100		B6400VB-350	SY Series, GM	AF	GK Series
507	6	150		B6600VB-507	SY Series, GM	AF	GK Series



2 YEAR WARRANTY

Equal Percentage Characteristic

Mode of Operation

The control valve is operated by an electronic actuator that responds to a standard voltage for on/off control, by a proportional VDC/4…20 mA, or 3-point control system. The actuator will then move the ball of the valve to the position dictated by the contol signal thus changing the flow.

Product Features

Equal percentage of flow

300:1 rangeability

ANSI Leakage Class IV

Actuator Specifications

Control type	on/off, floating point, proportional, 2-10 VDC multi-function technology (MFT)
Manual override	GM, AM, SY, NF, AF, GK
Electrical connection	3 ft [1m] cable with ½" conduit fitting

Valve Specifications

Service	chilled or hot water, (60% glycol), steam
Flow characteristic	equal percentage
Sizes	1" to 6"
End fitting	NPT (1" to 2") flanged (3" to 6")
Materials	
Body	carbon steel
Ball	hardened chrome plated stainless steel
Stem	stainless steel
Seats	Teflon
Seat O-rings	ALFAS
Characterizing disc	hardened chrome plated stainless steel
O-rings	ALFAS
Packing	spring loaded Teflon V-ring
Bushings	PEEK
Media temp range	380°F max.
Body pressure rating	NPT ANSI 300 (1" to 2") Flanged ANSI 150 (3" to 6")
Maximum ΔP steam	100 psi
Maximum ΔP water	150 psi
Close-off pressure	
Water	150 psi
Steam	200 psi
Maximum inlet pressure	
Steam	200 psi
Leakage	ANSI class IV

067001 - 04/13 - Subject to change. © Belimo Aircontrols (USA), Inc.

GENERAL INFORMATION

- Carbon Steel or Stainless Steel 150/300 ANSI Rated Bodies
- Equal Percentage Flow Characteristic
- Dual Body rating on 1", 1 ½" & 2" (ANSI 150/300)
- ASME B16.10 Face to Face Dimensions
- ANSI Class IV Shut-off
- 250 PSI 400 degree rated
- Field replaceable seat
- Maintenance free spring loaded packing

Ideal for replacing globe valves where high close off is required.

NOTE: Industrial ball valves have serviceable components similar to globe valves, proper maintenance of these parts will ensure longer in service life for the valves. The seats of these valves will require replacement at an interval consistent with number of full cycles the valve has been operated, or as field condition dictates.

FLOW PATTERN

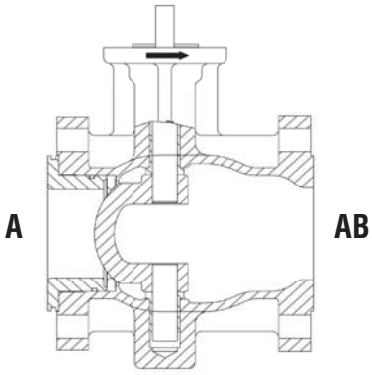

VS SERIES BALL VALVE PIPING DIAGRAMS

Water Application

2-way Valve Piping Diagram

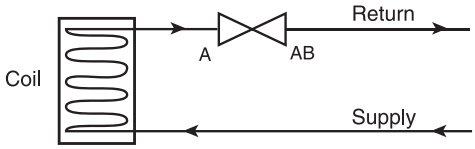

Steam Application

2-way Valve Piping Diagram

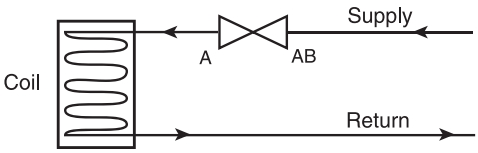

PIPING/MOUNTING ORIENTATION

Assembly can be mounted horizontally or vertically for water applications. For steam applications the valve can be mounted vertically but if mounted horizontally the valve must be 90° off center of the pipe. Do not install with actuator below pipe.

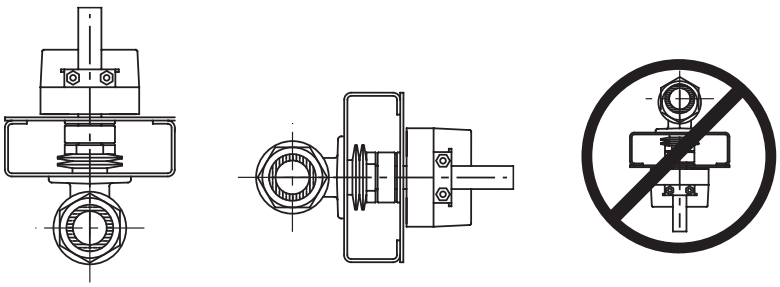

067001 - 04/13 - Subject to change. © Belimo Aircontrols (USA), Inc.

VALVE SIZE	C_V	TYPE	MODEL #	LINE SIZE 1" Fp Cv	1¼" Fp Cv	1½" Fp Cv	2" Fp Cv	2½" Fp Cv	3" Fp Cv	4" Fp Cv	5" Fp Cv	6" Fp Cv	8" Fp Cv	10" Fp Cv
1"	24	2-Way NPT	B2100VB-024	24.0	22.6	21.1	19.3	-	-	-	-	-	-	-
1½"	55	2-Way NPT	B2150VB-055	-	-	55.0	50.4	46.3	43.9	-	-	-	-	-
2"	77	2-Way NPT	B2200VB-077	-	-	-	77.0	74.1	70.5	66.2	-	-	-	-
3"	207	2-Way Flanged	B6300VB-027	-	-	-	-	-	207.0	191.3	177.2	168.9	-	-
4"	350	2-Way Flanged	B6400VB-350	-	-	-	-	-	-	350.0	333.0	313.2	290.3	-
6"	507	2-Way Flanged	B6600VB-507	-	-	-	-	-	-	-	-	507.0	491.5	475.5

067001- 04/13 - Subject to change. © Belimo Aircontrols (USA), Inc.

V Ball, Non-Spring Return Actuators

2-way Valve with Stainless Steel Ball and Stem

BELIMO

Valve Specifications

Service	steam & hot water 60% glycol, steam
Flow characteristic	A-port equal percentage
Controlable flow range	75°
Sizes	1", 1½", 2", 3", 4", 6"
End fitting	NPT Female Ends (1", 1½" & 2") ISO Flange (3",4" 6")
Materials:	
Body	WCC Grade Carbon steel
Ball	stainless steel
Stem	stainless steel
Seats	Teflon
Packing	Spring loaded Teflon V-Ring
Pressure rating	NPT ANSI 300 (1" to 2") flanged ANSI 150 (3" to 6")
Media temp. range:	
Steam	380°F
Water	380°F
Close off pressure	
Steam	200 psi
Water	150 psi
Maximum differential pressure (ΔP)	water: 150 psi steam: 100 psi
Maximum inlet	steam: 200 psi
Leakage	ANSI class IV
C_v rating	see chart below for values

2 YEAR WARRANTY

Non-Spring Return Actuators









ACTUATOR PART #	AMB24-3-X1	AMX24-MFT-X1	GMB24-3-X1	GMB24-SR-X1	GMX24-MFT-X1	SY1-24, SY1-110, SY1-220	SY2-24, SY2-110, SY2-220	SY2-24MFT, SY2-120-MFT, SY2-230MFT
Control type	On/Off, Floating Point	Proportional/ MFT	On/Off	Proportional	Proportional/ MFT	On/Off, Floating Point	On/Off, Floating Point	Proportional/ MFT
Manual override	•	•	•	•	•	•	•	•
Running time	90 seconds	150 seconds (default variable 90 to 350 seconds)	135 seconds	135 seconds	150 seconds (default)	15, 12, 12 seconds	15 seconds / 60 Hz	15, 17, 17 seconds
Noise level	<45 dB(A)	<45 dB(A)	<45 dB(A)	<45 dB(A)	<45 dB(A)			
ELECTRICAL CONNECTION:								
3 ft. cable, ½" conduit fitting	•	•	•	•	•			
2 (two), ½" conduit fittings / covered terminal strip						•	•	•

V Ball Valve Model #	C_v Rating	Valve Nominal Size In.	DN mm	Close-off psi						
B2100VB-024	24	1	25	250	$2,288.00	$2,481.00				$2,855.00	$4,238.00	$6,616.00
B2150VB-055	55	1½	40	250	$2,695.00	$2,888.00				$3,261.00	$4,645.00	$7,022.00
B2200VB-077	77	2	50	250	$2,850.00	$3,042.00				$3,417.00	$4,799.00	$7,178.00
B6300VB-207	207	3	80	250	$4,436.00	$4,629.00				$5,002.00	$6,386.00	$8,763.00
B6400VB-350	350	4	100	250			$6,235.00	$6,180.00	$6,460.00		$8,042.00	$10,420.00
B6600VB-507	507	6	150	250							$10,210.00	$12,589.00

NOTE: Industrial ball valves have serviceable components, proper maintenance of these parts will ensure longer in service life for the valves.
The seats of these valves will require replacement at an interval consistent with number of full cycles the valve has be operated, or as field condition dictates.
Replacement parts can be ordered from Belimo.

SY MULTI-FUNCTION TECHNOLOGY

Description	P-CODE	Control Input	Built-in Feedback	Loss of Signal	Running Time	List Price
MFT	ACE	2-10 VDC	2-10 VDC	stop	actuator(s) constant	No Charge
MFT	ACF	0.5-10 VDC	0.5-10 VDC	stop	actuator(s) constant	No Charge
MFT	ACG	4-20mA	4-20mA	stop	actuator(s) constant	No Charge
MFT	ACH	4-20mA	2-10 VDC	stop	actuator(s) constant	No Charge
MFT	W3E	0.02-5.00 seconds PWM*	2-10 VDC	stop	actuator(s) constant	No Charge
MFT	ACJ	2-10 VDC	2-10 VDC	open	actuator(s) constant	No Charge
MFT	ACK	0.5-10 VDC	0.5-10 VDC	open	actuator(s) constant	No Charge
MFT	ACL	4-20mA	4-20mA	open	actuator(s) constant	No Charge
MFT	ACM	4-20mA	2-10 VDC	open	actuator(s) constant	No Charge
MFT	ACN	2-10 VDC	2-10 VDC	close	actuator(s) constant	No Charge
MFT	ACP	0.5-10 VDC	0.5-10 VDC	close	actuator(s) constant	No Charge
MFT	ACR	4-20mA	4-20mA	close	actuator(s) constant	No Charge
MFT	ACS	4-20mA	2-10 VDC	close	actuator(s) constant	No Charge

Most popular configurations are available at no additional cost. All other configurations carry a $34.00 list price.
Standard delivery may vary, please consult your customer service representative for the latest lead time(s).
Specify MFT codes when ordering MFT actuators.
*Available only on 24MFT actuators.

067001 - 04/13 - Subject to change. © Belimo Aircontrols (USA), Inc.

Valve Specifications	
Service	steam & hot water 60% glycol, steam
Flow characteristic	A-port equal percentage
Controlable flow range	75°
Sizes	1", 1½", 2", 3", 4"
End fitting	NPT Female Ends (1", 1½" & 2") ISO Flange (3", 4")
Materials:	
Body	WCC Grade Carbon steel
Ball	stainless steel
Stem	stainless steel
Seats	Teflon
Packing	Spring loaded Teflon V-Ring
Pressure rating	NPT ANSI 300 (1" to 2") flanged ANSI 150 (3" to 4")
Media temp. range:	
Steam	380°F
Water	380°F
Close off pressure	
Steam	200 psi
Water	150 psi
Maximum differential pressure (ΔP)	water: 150 psi steam: 100 psi
Maximum inlet	steam: 200 psi
Leakage	ANSI class IV
C_v rating	see chart below for values

Visit *www.belimo.us* to see additional Spring Return and Electronic Fail-Safe options.

2 YEAR WARRANTY

Spring Return and Electronic Fail-Safe Actuators






ACTUATOR PART #		NFB24-X1	NFX24-MFT-X1	AFB24-X1	AFBUP-X1	AFX24-MFT-X1	2*AFB24-X1	2*AFBUP-X1	2*AFX24-MFT-X1	GKB24-3-X1	GKX24-MFT-X1
Control type		On/Off	Proportional/ MFT	On/Off	On/Off	Proportional/ MFT	On/Off	On/Off	Proportional/ MFT	On/Off	Proportional/ MFT
Manual override		•	•	•	•	•	•	•	•	•	•
Running time	Motor	<75 seconds	150 seconds (default) variable 40 to 220 seconds	<75 seconds	<75 seconds	150 seconds (default) variable 70 to 150 seconds	<75 seconds	<75 seconds	150 seconds (default) variable 70 to 150 seconds	150 seconds	150 seconds (default) variable 70 to 150 seconds
	Spring	<20 seconds	<20 seconds	<20 seconds	<20 seconds	<20 seconds	<20 seconds	<20 seconds	<20 seconds	<35 seconds	<35 seconds
Noise level		<50 dB(A)	<40 dB(A)	<50 dB(A)	<50 dB(A)	<40 dB(A)	<50 dB(A)	<50 dB(A)	<40 dB(A)	<45 dB(A)	<45 dB(A)
ELECTRICAL CONNECTION:											
3 ft. cable, ½" conduit fitting		•	•	•	•	•	•	•	•	•	•

V Ball Valve Model #	Cv	In.	DN mm	Close-off psi								
B2100VB-024	24	1	25	250	$2,365.00	$2,568.00								
B2150VB-055	55	1½	40	250	$2,770.00	$2,974.00								
B2200VB-077	77	2	50	250			$3,008.00	$3,067.00	$3,195.00					
B6300VB-207	207	3	80	250						$5,093.00	$5,212.00	$5,469.00	$5,927.00	$6,153.00
B6400VB-350	350	4	100	250									$6,235.00	$6,460.00

2* Denotes tandem actuators.

NOTE: Industrial ball valves have serviceable components, proper maintenance of these parts will ensure longer in service life for the valves.
The seats of these valves will require replacement at an interval consistent with number of full cycles the valve has be operated, or as field condition dictates.
Replacement parts can be ordered from Belimo.

MULTI-FUNCTION TECHNOLOGY

Description	P-CODE	Control Input	Running Time	Built-in Feedback	List Price
P-10001	A01	2-10 VDC	150 seconds	2-10 VDC	No Charge
P-10002	A02	0-10 VDC	150 seconds	0-10 VDC	No Charge
P-10028	A28	0-10 VDC	100 seconds	0-10 VDC	No Charge
P-10063	A63	0.5-4.5 VDC	150 seconds	0.5-4.5 VDC	No Charge
P-10064	A64	5.5-10 VDC	150 seconds	5.5-10 VDC	No Charge
P-20002	W02	0.02-5.00 seconds PWM	150 seconds	2-10 VDC	No Charge
P-20003	W03	0.10-25.5 seconds PWM	150 seconds	2-10 VDC	No Charge
P-30001	F01	Floating Point	150 seconds	2-10 VDC	No Charge
P-40002	J02	On/Off	150 seconds	2-10 VDC	No Charge

Specify MFT codes when ordering MFT actuators.
Note: Most popular configurations available at no additional cost. All other configurations carry a $34.00 list price.

067001- 04/13 - Subject to change. © Belimo Aircontrols (USA), Inc.

Valve Accessories

Ball Valves

		Non-Spring Return Actuator				Spring Return Actuator			Electronic Fail-Safe	
WEATHERSHIELDS		**LM**	**NM**	**AM**	**GM**	**LF**	**NF**	**AF**	**GK**	**List Price**
	**ZS-SPBV-10** NM/AM/GM/NF/AF/GK series on VS/VSS/VB		•	•	•		•	•	•	$279.00
	ZS-SPBV-20 Dual GM/AF/GK series on VS/VSS/VB				•			•	•	$519.00
	ZS-BVVS-0002 LM on VS/VSS	•								$279.00
	ZS-BVVS-0003 LF series on VS/VSS					•				$279.00
AUXILIARY SWITCHES & POTENTIOMETERS										
	S1A Auxiliary switch - 1x SPDT, 3A (0.5A Inductive) @ 250 VAC	•	•	•					•	$84.00
	S2A Auxiliary switch - 1x SPDT, 3A (0.5A Inductive) @ 250 VAC	•	•	•					•	$125.00
	P140A Feedback potentiometer 140 Ω	•	•	•					•	$138.00
	P500A GR Feedback potentiometer 500 Ω	•	•	•					•	$138.00
	P1000A GR Feedback potentiometer 1000 Ω	•	•	•					•	$138.00
	P2800A GR Feedback potentiometer 2800 Ω	•	•	•					•	$138.00
	P5000A GR Feedback potentiometer 5000 Ω	•	•	•					•	$138.00
	P10000A GR Feedback potentiometer 10000 Ω	•	•	•					•	$138.00
BATTERY BACKUP										
	NSV24 US Battery backup module	•	•	•	•	•	•	•	•	$783.00
	**NSV-BAT US** 12VDC 1.2 AH battery (2 required)	•	•	•	•	•	•	•	•	$119.00

Note: Each NSV-24 US requires 2 NSV-BAT.

		Non-Spring Return Actuator			Spring Return Actuator	
ELECTRIC DISCONNECT		**AM**	**GM**	**SY**	**AF**	**List Price**
	HOA-120V Local Electric Disconnect SY2-SY12 110/230V - 2 Position			•		$587.00
	HOA-120VMFT Local Electric Disconnect SY2-SY12 110/230V - Proportional			•		$587.00
	HOA-24V Local Electric Disconnect SY2-SY12 24V - 2 Position			•		$587.00
	HOA-24VMFT Local Electric Disconnect SY2-SY12- 24 Proportional			•		$587.00
AUXILIARY SWITCHES & POTENTIOMETERS						
	SY-1000-FB01 1000 Ω Feedback Potentiometer 2 Position, Factory Installed Option Only			•		$245.00
	SY-1000-FB02 1000 Ω Feedback Potentiometer Proportional, Factory Installed Option Only (Proportional Models SYx...-P, SR or MFT)			•		$245.00

067001 - 04/13 - Subject to change. © Belimo Aircontrols (USA), Inc.

		Non-Spring Return Actuator			Spring Return Actuator	
PROGRAMMING TOOLS		**AM**	**GM**	**SY**	**AF**	**List Price**
	**MFT-P US** Belimo MFT Configuration Software (V3.X) Includes: PC Tool software and MFT-LBL Kit US (interface cables [ZIP-RS232 US and ZIP-USB-MP] not included)	•	•	•	•	$158.00
INTERFACES, CABLES						
	**ZIP-USB-MP US** PC-Interface: Compact Unit for use with USB port and "ZK" Style Cable Adapter (ZK Cable Below Purchased Separately)	•	•	•	•	$582.00
	**ZK1-GEN** Cable for Use with ZIP-USB-MP US to Connect to New Generation Non-Spring Return Actuator via Diagnostic/ Programming Socket	•	•			$102.00
	**ZK2-GEN** Cable for Use with ZIP-USB-MP US to Connect with Spring and Non-Spring Return Actuators Not Equipped with Diagnostic/ Programming Socket	•	•	•	•	$47.00
	**ZK6-GEN** Cable for Use with ZIP-USB-MP US to Connect to SY Actuator via RJII Port			•		$49.00
BATTERY BACKUP						
	**NSV-SY-01** Battery Backup System for SY1-SY6 2 Position - 110 VAC			•		$4,142.00
	NSV-SY-02 Battery Backup System for SY1-SY6 Proportional - 120 VAC			•		$4,328.00
	NSV-SY-11 Battery Backup System for SY1-SY5 2 Position - 24 VAC			•		$4,833.00
	NSV-SY-12 Battery Backup System for SY1-SY5 Proportional - 24 VAC			•		$4,960.00
	NSV-SY-21 Battery Backup System for SY1-SY6 2 Position - 220 VAC			•		$4,770.00
	NSV-SY-22 Battery Backup System for SY1-SY6 Proportional - 230 VAC			•		$4,896.00

067001- 04/13 - Subject to change. © Belimo Aircontrols (USA), Inc.

13 ZONE VALVES

- Designed to fit in compact areas where on/off control is required.
- Actuator installation is a snap with an easy, one-handed removal or engagement.
- Actuator has a synchronous motor that winds the return spring and moves the valve paddle to the desired position.
- Economical operation allows for low current draw and multiple valves per transformer.
- Enhanced motion gear action reduces motor wear and provides smooth, quiet operation with no water hammer and dependable close off.

Applications

For high rise and commercial applications where higher close-off is required: fin tube casing, fan coils, radiant panels and duct coils. Zone valves control the flow of hot and chilled water through coils and heat exchangers.



Zone Valve Nomenclature

ZONE2	15	N	-10	+ZONE24NC	-S
Valve Zone2 = 2-way Zone3 = 3-way	**Valve Size** 15 = ½” 20 = ¾” 25 = 1”	**End Fitting** N = NPT Female Connection S = Sweat Connection	**C_V Valve** -10 = 1.0 -25 = 2.5 -35 = 3.5 -50 = 5.0 -80 = 8.0	**Actuator Type** 24NC = 24 Volt Normally Closed 24NO = 24 Volt Normally Open 120NC = 120 Volt Normally Closed 120NO = 120 Volt Normally Open	-S = Built-in Auxiliary Switch

Ordering Example

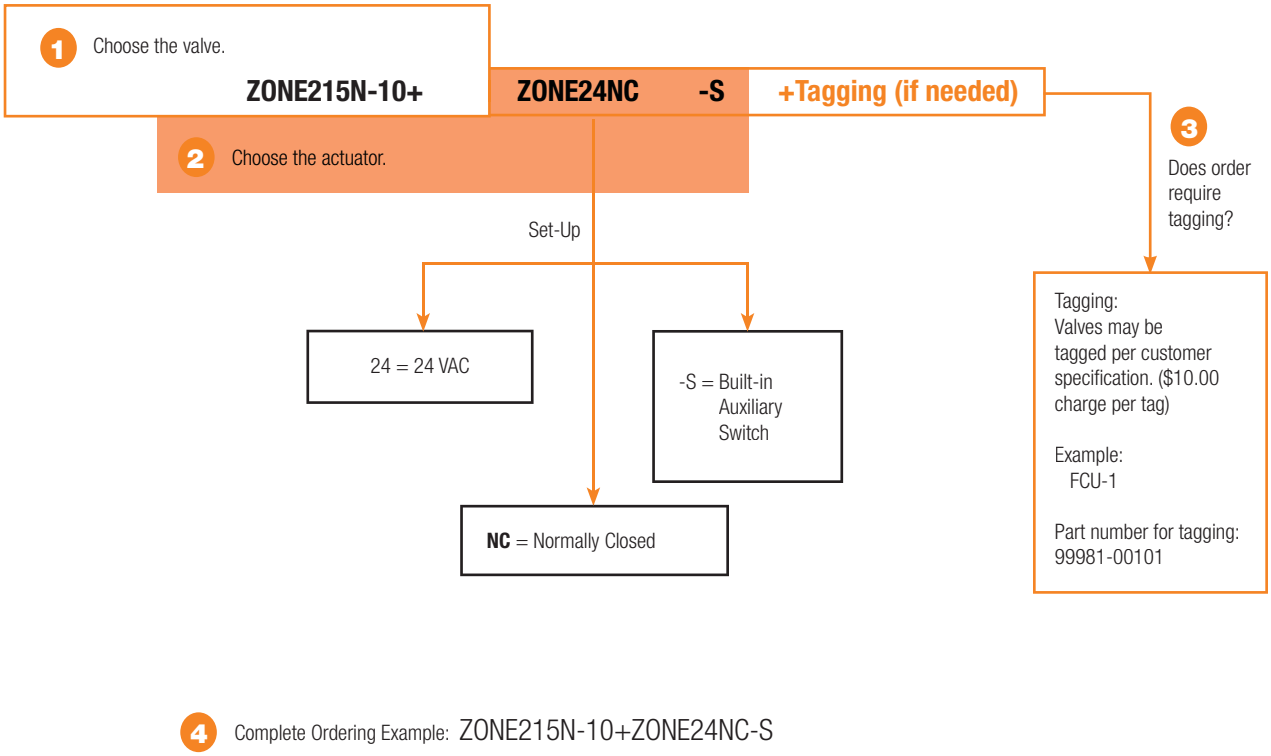

4 Complete Ordering Example: ZONE215N-10+ZONE24NC-S

Control Valve Product Range

Zone Valve Product Range
Z2.., Z3..

	Valve Nominal Size		Type		Suitable Actuators			
C_V	Inches	DN [mm]	2-way NPT	2-way Sweat	Normally Closed		Normally Open	
1	½	15	ZONE215N-10	ZONE215S-10	Zone	Zone (with Switch)	Zone	Zone (with Switch)
2.5	½	15	ZONE215N-25	ZONE215S-25				
3.5	½	15	ZONE215N-35	ZONE215S-35				
3.5	¾	20	ZONE220N-35	ZONE220S-35				
5	¾	20	ZONE220N-50	ZONE220S-50				
8	1	25	ZONE225N-80	ZONE225S-80				

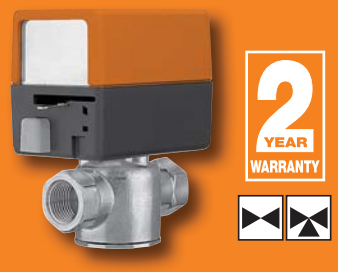

	Valve Nominal Size		Type		Suitable Actuators	
C_V	Inches	DN [mm]	3-way NPT	3-way Sweat	Normally Closed	
1	½	15	ZONE315N-10	ZONE315S-10	Zone	Zone (with Switch)
2.5	½	15	ZONE315N-25	ZONE315S-25		
3.5	½	15	ZONE315N-35	ZONE315S-35		
3.5	¾	20	ZONE320N-35	ZONE320S-35		
5	¾	20	ZONE320N-50	ZONE320S-50		
8	1	25	ZONE325N-80	ZONE325S-80		

Mode of Operation
Zone valves provide a convenient way to create individual zones or equipment isolation in a hydronic system. Utilizing one pump along with multiple zone valves, flow can be started, stopped, or diverted through the system to provide individual room or area comfort control and energy savings.

Product Features
Zone valve is designed to fit in compact areas where on/off control is required using 24 VAC or 120 VAC.

Actuator Specifications

Control type	on/off
Manual override	all versions
Electrical connection	6" [15cm] wire lead 120 V; 18" [45 cm] wire lead 24 V

Valve Specifications

Service	chilled or hot water, 50% glycol
Flow characteristic	
Two-way	on/off
Three-way	on/off, diverting
Sizes	½", ¾" and 1"
End fitting	NPT female ends or sweat
Materials	
Body	forged brass
Stem	stainless steel
Seals	EPDM
Media temp range	32°F to 212°F [0°C to 100°C]
Body pressure rating	300 psi
Close off pressure	20-75 psi
Leakage	ANSI Class III 0.1%

067001 - 04/13 - Subject to change. © Belimo Aircontrols (USA), Inc.

INSTALLATION

The valve can be installed vertically or horizontally, but not below horizontal.

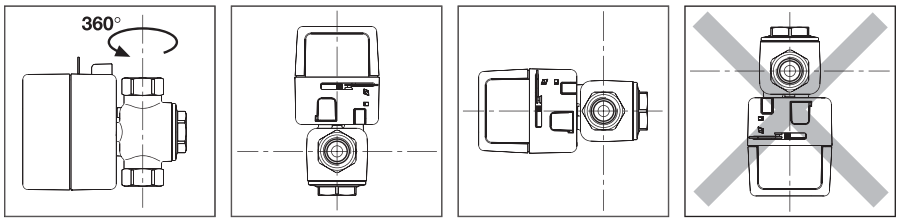

– A 3-way valve cannot be transformed into a 2-way valve and visa versa.
– The 2-way flow is from A to B (see diagram below) and must be installed so the paddle closes against the direction of flow.
– The 2-way valves can be installed on the supply or on the return; for correct installation it is necessary to respect the direction of flow indicated by the arrow on the valve body.
– The NC versions have an override handle.
– 3-way zone valves can be fitted with NC actuator only (rotate the valve body 180° for NO application).

	2-WAY	3-WAY
N.C. without power	Port “A” closed	Port “A” closed Port “B” open Port “AB” open
N.C. open with power	Port “A” open	Port “A” open Port “B” closed Port “AB” open
N.C. manually open	Port “A” open	Port “A” open Port “B” open Port “AB” open

2-way Valve

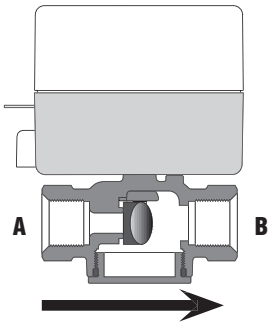

Normally closed actuator

3-way Valve

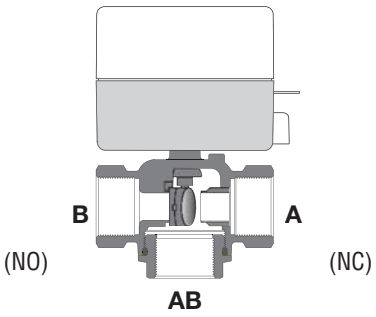

Normally closed actuator

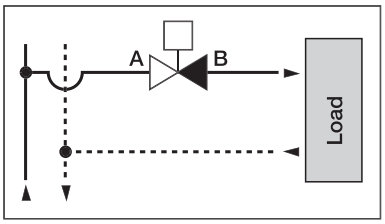

Installed on the supply

Normally closed actuator

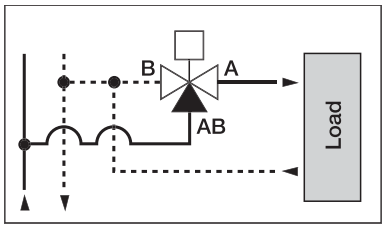

Installed on the supply in diverting configuration

Normally closed actuator

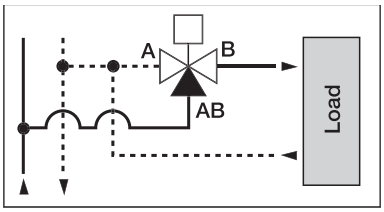

Installed on the supply in diverting configuration

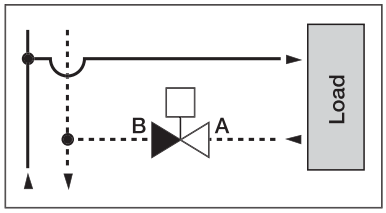

Installed on the return

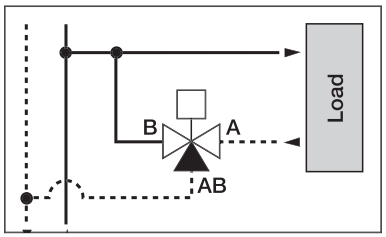

Installed on the return

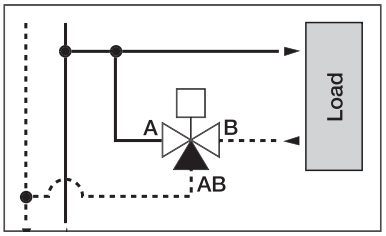

Installed on the return

ZONE VALVES

067001- 04/13 - Subject to change. © Belimo Aircontrols (USA), Inc.

Valve Specifications

Service	chilled or hot water, 50% glycol
Flow characteristic	two-way: on/off three-way: on/off, diverting
Sizes	½", ¾" and 1"
End fitting	female NPT or sweat
Materials:	
Body	forged brass
Stem	stainless steel
Seats	EPDM
Seals	machined brass
Pressure rating	300 psi
Media temp. range	32°F to 212°F [0°C to 100°C]
Leakage	ANSI class III 0.1%
Cv rating	see chart below for values

2 YEAR WARRANTY

Spring Return Actuators






ACTUATOR PART #					ZONE24NC	ZONE24NO	ZONE24NC-S	ZONE24NO-S
Control type					On/Off	On/Off	On/Off	On/Off
Manual override					•		•	
Running time				Motor	20-40 seconds	20-40 seconds	20-40 seconds	20-40 seconds
				Spring	5 seconds	5 seconds	5 seconds	5 seconds
Noise level					max. 35 dB(A)	max. 35 dB(A)	max. 35 dB(A)	max. 35 dB(A)
ELECTRICAL CONNECTION:								
24 V 18" wire					•	•	•	•
Zone Valve Model #	**Cv Rating**	**Valve Nominal Size Inches**	**DN mm**	**Close-Off psi**				
2-WAY WITH NPT FEMALE CONNECTION								
ZONE215N-10	1	½	15	75	$171.00	$171.00	$184.00	$184.00
ZONE215N-25	2.5	½	15	50	$171.00	$171.00	$184.00	$184.00
ZONE215N-35	3.5	½	15	30	$171.00	$171.00	$184.00	$184.00
ZONE220N-35	3.5	¾	20	30	$189.00	$189.00	$201.00	$201.00
ZONE220N-50	5	¾	20	25	$189.00	$189.00	$201.00	$201.00
ZONE225N-80	8	1	25	20	$243.00	$243.00	$256.00	$256.00
3-WAY WITH NPT FEMALE CONNECTION								
ZONE315N-10	1	½	15	75	$189.00	†	$201.00	†
ZONE315N-25	2.5	½	15	50	$189.00	†	$201.00	†
ZONE315N-35	3.5	½	15	30	$189.00	†	$201.00	†
ZONE320N-35	3.5	¾	20	30	$203.00	†	$215.00	†
ZONE320N-50	5	¾	20	25	$203.00	†	$215.00	†
ZONE325N-80	8	1	25	20	$259.00	†	$272.00	†
2-WAY WITH SWEAT CONNECTION								
ZONE215S-10	1	½	15	75	$167.00	$167.00	$180.00	$180.00
ZONE215S-25	2.5	½	15	50	$167.00	$167.00	$180.00	$180.00
ZONE215S-35	3.5	½	15	30	$167.00	$167.00	$180.00	$180.00
ZONE220S-35	3.5	¾	20	30	$180.00	$180.00	$194.00	$194.00
ZONE220S-50	5	¾	20	25	$180.00	$180.00	$194.00	$194.00
ZONE225S-80	8	1	25	20	$236.00	$236.00	$250.00	$250.00
3-WAY WITH SWEAT CONNECTION								
ZONE315S-10	1	½	15	75	$182.00	†	$196.00	†
ZONE315S-25	2.5	½	15	50	$182.00	†	$196.00	†
ZONE315S-35	3.5	½	15	30	$182.00	†	$196.00	†
ZONE320S-35	3.5	¾	20	30	$198.00	†	$211.00	†
ZONE320S-50	5	¾	20	25	$198.00	†	$211.00	†
ZONE325S-80	8	1	25	20	$250.00	†	$261.00	†

† Three-way valve can be installed in NC or NO configuration using the NC actuator.

067001- 04/13 - Subject to change. © Belimo Aircontrols (USA), Inc.

Electronic Zone Valves, Spring Return Actuators

2-way and 3-way Valves with NPT or Sweat Connection

BELIMO

Valve Specifications

Service	chilled or hot water, 50% glycol
Flow characteristic	two-way: on/off three-way: on/off, diverting
Sizes	½", ¾" and 1"
End fitting	female NPT or sweat
Materials:	
Body	forged brass
Stem	stainless steel
Seats	EPDM
Seals	machined brass
Pressure rating	300 psi
Media temp. range	32°F to 212°F [0°C to 100°C]
Leakage	ANSI class III 0.1%
Cv rating	see chart below for values

2 YEAR WARRANTY

Spring Return Actuators






ACTUATOR PART #		ZONE120NC	ZONE120NO	ZONE120NC-S	ZONE120NO-S
Control type		On/Off	On/Off	On/Off	On/Off
Manual override		•		•	
Running time	Motor	20-40 seconds	20-40 seconds	20-40 seconds	20-40 seconds
	Spring	5 seconds	5 seconds	5 seconds	5 seconds
Noise level		max. 35 dB(A)	max. 35 dB(A)	max. 35 dB(A)	max. 35 dB(A)
ELECTRICAL CONNECTION:					
120 V 6" wire		•	•	•	•

Zone Valve Model #	Cv Rating	Valve Nominal Size VNS IN	DN mm	Close-Off psi				
2-WAY WITH NPT FEMALE CONNECTION								
ZONE215N-10	1	½	15	75	$171.00	$171.00	$184.00	$184.00
ZONE215N-25	2.5	½	15	50	$171.00	$171.00	$184.00	$184.00
ZONE215N-35	3.5	½	15	30	$171.00	$171.00	$184.00	$184.00
ZONE220N-35	3.5	¾	20	30	$189.00	$189.00	$201.00	$201.00
ZONE220N-50	5	¾	20	25	$189.00	$189.00	$201.00	$201.00
ZONE225N-80	8	1	25	20	$243.00	$243.00	$256.00	$256.00
3-WAY WITH NPT FEMALE CONNECTION								
ZONE315N-10	1	½	15	75	$189.00	†	$201.00	†
ZONE315N-25	2.5	½	15	50	$189.00	†	$201.00	†
ZONE315N-35	3.5	½	15	30	$189.00	†	$201.00	†
ZONE320N-35	3.5	¾	20	30	$203.00	†	$215.00	†
ZONE320N-50	5	¾	20	25	$203.00	†	$215.00	†
ZONE325N-80	8	1	25	20	$259.00	†	$272.00	†
2-WAY WITH SWEAT CONNECTION								
ZONE215S-10	1	½	15	75	$167.00	$167.00	$180.00	$180.00
ZONE215S-25	2.5	½	15	50	$167.00	$167.00	$180.00	$180.00
ZONE215S-35	3.5	½	15	30	$167.00	$169.00	$180.00	$180.00
ZONE220S-35	3.5	¾	20	30	$180.00	$180.00	$194.00	$194.00
ZONE220S-50	5	¾	20	25	$180.00	$180.00	$196.00	$194.00
ZONE225S-80	8	1	25	20	$236.00	$236.00	$250.00	$250.00
3-WAY WITH SWEAT CONNECTION								
ZONE315S-10	1	½	15	75	$182.00	†	$196.00	†
ZONE315S-25	2.5	½	15	50	$182.00	†	$196.00	†
ZONE315S-35	3.5	½	15	30	$182.00	†	$196.00	†
ZONE320S-35	3.5	¾	20	30	$198.00	†	$211.00	†
ZONE320S-50	5	¾	20	25	$198.00	†	$211.00	†
ZONE325S-80	8	1	25	20	$250.00	†	$261.00	†

† Three-way valve can be installed in NC or NO configuration using the NC actuator.

067001- 04/13 - Subject to change. © Belimo Aircontrols (USA), Inc.

14 GLOBE VALVES

- Adaptive stroke of actuator utilizes full control signal for maximum resolution.
- Visual sliding stroke indicators allow quick installation and system checks.
- Assembly can be mounted with valve stem horizontal to the pipe.
- Self locking valve coupling to ensure proper valve-actuator connection.
- Pressure compensated flanged globe valves utilize a balanced plug design perfect for high close-off requirements.



Applications

The comprehensive line of globe valves is available in sizes from ½" to 6" and fulfills the requirements of ANSI 125 and ANSI 250 applications. Utilizing either bronze or stainless steel trim and fitted with either spring return, non-spring return, or electronic fail-safe actuators, globe valves are the perfect fit for applications such as unit ventilation and air handling units as well as water/steam control in other HVAC systems.





Globe Valve Nomenclature

G2	14		LVX	24	-MFT
Valve Type	**Valve Size**	**Trim Material**	**Actuator Type**	**Power Supply**	**Control**
G2 = 2-way NPT G3 = 3-way NPT G6 = 2-way Flanged G7 = 3-way Flanged	12-50 = ½" to 2" 65-150 = 2½" to 6" (Flanged)	Blank = Bronze Trim S = Stainless Trim -250 = ANSI 250 Bronze Trim S-250 = ANSI 250 Stainless Trim C = Bronze Trim Pressure Compensated CS = Stainless Trim Pressure Compensated LCS = Linear Stainless Trim Pressure Compensated D = Diverting Bronze Trim DS = Diverting Stainless Trim	Non-Spring Return LV… SV… EV… RV… Spring Return LF… NF… AF… Electronic Fail-Safe GK… LVK… SVK… AVK…	24 = 24 VAC/DC 120 = 120 VAC UP = 24-240 VAC or 24-125 VDC	Blank = On/Off -3 = On/Off, Floating Point -SR = 2-10 VDC -MFT or MFT-X1= Multi-Function Technology -MFT95-X1= 0-135 Ω

Ordering Example

1 Choose the valve actuator combination.

G214+LVX24-MFT

2 Specify preference or configuration.

3 **For MFT orders only - select programming code**

+NO | **+Tagging (if needed)**

Set-Up

Non-Spring Models
NO = Normally Open
NC = Normally Closed

Fail-Safe Models
NO/FO = Normally Open/Fail Open
NO/FC = Normally Open/Fail Closed

NC/FO = Normally Closed/Fail Open
NC/FC = Normally Closed/Fail Closed

Refers to valve ports A to AB.

G43

G43	2 to 10 VDC
G53	0.5 to 10 VDC
W3M	0.02 to 5.00 seconds PWM
G13	Floating Point
G03	On/Off

4 Does order require tagging?

Tagging:
Valves may be tagged per customer specification. ($10.00 per tag)

Example:
AHU-1
FCU-2

Part number for tagging:
99981-00101

5 Complete Ordering Example: G214+LVX24-MFT+NO+G43

Control Valve Product Range

Globe Valve Product Range
G2.., G3..

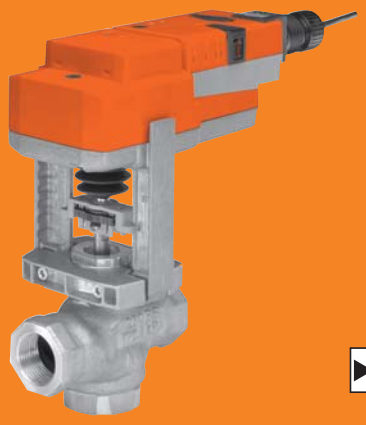

	Valve Nominal Size		Type		Suitable Actuators		
C_V	Inches	DN [mm]	2-way NPT	3-way NPT	Non-Spring Return	Spring Return	Electronic Fail-Safe
0.4	½	15	G212	–	LV Series	LF Series	LVK Series
1.3	½	15	G213	–			
2.2	½	15	G214	–			
4.4	½	15	G215	–			
0.4	½	15	G212S	–			
1.3	½	15	G213S	–			
2.2	½	15	G214S	G314			
4.4	½	15	G215S	G315			
4.4	½	15	–	G315D			
5.5	¾	20	G219	–			
7.5	¾	20	G220	–			
5.5	¾	20	G219S	–			
7.5	¾	20	G220S	G320			
7.5	¾	20	–	G320D			
10	1	25	G224	–	SV Series	NF Series	SVK Series
14	1	25	G225	–			
10	1	25	G224S	–			
14	1	25	G225S	G325			
14	1	25	–	G325D			
20	1¼	32	G232	–			
20	1¼	32	G232S	G332		AFX Series	
20	1¼	32	–	G332D			
28	1½	40	G240	–			
28	1½	40	G240S	G340			
28	1½	40	–	G340D			
40	2	50	G250	–			
40	2	50	G250S	–			
41	2	50	–	G350			
40	2	50	–	G350D			

Mode of Operation
The control valve is operated by an electronic actuator that responds to a standard voltage for on/off control, by a proportional VDC/4…20 mA, 3-point control system. The actuator will then move the plug of the valve to the position dictated by the control signal thus changing the flow.

Product Features
Equal percentage characteristic of flow for G2, linear characteristic for G3.

Actuator Specifications

Control type	on/off, floating point, 2-10 VDC multi-function technology (MFT)
Manual override	all models except LF
Electrical connection	3 ft [1m] cable with ½" conduit fitting

Valve Specifications

Service	chilled or hot water, 60% glycol, steam
Flow characteristic	G2 - equal percentage G2S, G3, G3D - linear
Sizes	½" - 2"
End fitting	NPT female ends
Materials	
Body	bronze
Stem	stainless steel
Plug	brass stainless steel: G2..S
Seat	bronze stainless steel: G2..S
Packing	spring loaded TFE
Seal	composition G2 Teflon® G2...S none G3, G3D
Media temp range	refer to valve specification pages in this section
Body pressure rating	250 psi G2, G3..., ½"- 2"
Maximum inlet pressure	
Steam	35 psi (241 kPa) G2 50 psi (345 kPa) G2...S 100 psi (690 kPa) G2...S
Maximum differential pressure (ΔP)	
Water	35 psi (241 kPa)
Steam	20 psi (138 kPa) G2 35 psi (241 kPa) G2...S

067001 - 04/13 - Subject to change. © Belimo Aircontrols (USA), Inc.

Control Valve Product Range

Globe Valve Product Range
G6..

	Valve Nominal Size	Type	Suitable Actuators		
C_V	Inches	2-way Flanged	Non-Spring Return	Spring Return	Electronic Fail-Safe
65	2½	G665C	EV Series	AFX Series	AVK Series
65	2½	G665CS			
65	2½	G665C-250			
65	2½	G665CS-250			
65	2½	G665LCS			
90	3	G680C			
90	3	G680CS			
90	3	G680C-250			
90	3	G680CS-250			
90	3	G680LCS			
170	4	G6100C			
170	4	G6100CS			
170	4	G6100C-250			
170	4	G6100CS-250			
170	4	G6100LCS			
263	5	G6125C			
263	5	G6125CS			
263	5	G6125C-250			
263	5	G6125CS-250			
263	5	G6125LCS			
344	6	G6150C			
344	6	G6150CS			
344	6	G6150C-250			
344	6	G6150CS-250			
344	6	G6150LCS			

The G...(C)(CS)(LCS) Series valve is a pressure compensated valve that allows high close-off ratings while utilizing standard actuation.



Mode of Operation
The control valve is operated by an electronic actuator that responds to a standard voltage for on/off control, a proportional VDC/4…20 mA, or 3-point control system. The actuator will then move the plug of the valve to the position dictated by the control signal thus changing the flow.

Product Features
Equal-percentage characteristic for G6. Linear characteristic for G6...LCS

Actuator Specifications

Control type	on/off, floating point, 2-10 VDC multi-function technology (MFT)
Manual override	all models
Electrical connection	3 ft [1m] cable with ½" conduit fitting

Valve Specifications

Service	chilled or hot water, 60% glycol, steam
Flow characteristic	
G6	A-port equal percentage
G6LCS	linear
Sizes	2½" - 6"
End fitting	flanged
Materials	
Body	cast iron
Stem	stainless steel
Plug	brass
Seat	bronze: G6 stainless steel: G6..S
Packing	
G6	bronze trimmed: NLP
G6S	stainless trimmed: TFE V-ring
Media temp range	refer to valve specification pages in this section
Body pressure rating	
G6, 125# ANSI flange	125 psi
G6, 250# ANSI flange	250 psi
Maximum inlet pressure	
Water	150 psi (1034 kPa) G6C, G6CS 250 psi (1724 kPa) G6C...250, G6CS...250
Steam	35 psi (241 kPa) G6C, G6C...250 50 psi (345 kPa) G6CS, G6CS...250 100 psi (690 kPa) G6CS, G6CS...250
Maximum differential pressure (ΔP)	
Water	25 psi (172 kPa) G6C, G6C...250 50 psi (345 kPa) G6CS, G6CS...250
Steam	15 psi (103 kPa) G6C, G6C...250 50 psi (345 kPa) G6CS, G6CS...250

067001 - 04/13 - Subject to change. © Belimo Aircontrols (USA), Inc.

Control Valve Product Range

Globe Valve Product Range
G7..



	Valve Nominal Size		Suitable Actuators		
C_V	Inches	3-Way Flanged	Non-Spring Return	Spring Return	Electronic Fail-Safe
68	2½	G765	EV / RV Series	AFX Series	AVK Series
68	2½	G765S			
68	2½	G765-250			
68	2½	G765S-250			
91	3	G780			
91	3	G780S			
91	3	G780-250			
91	3	G780S-250			
190	4	G7100			
190	4	G7100S			
190	4	G7100-250			
190	4	G7100S-250			
280	5	G7125	RV Series		GK Series
280	5	G7125S			
280	5	G7125-250			
280	5	G7125S-250			
340	6	G7150			
340	6	G7150S			
340	6	G7150-250			
340	6	G7150S-250			
68	2½	G765D	EV Series	AFX Series	AVK Series
68	2½	G765DS			
68	2½	G765DS-250			
85	3	G780D			
85	3	G780DS			
85	3	G780DS-250			
154	4	G7100D			
154	4	G7100DS			
154	4	G7100DS-250			
195	5	G7125D			
195	5	G7125DS			
195	5	G7125DS-250			
248	6	G7150D			
248	6	G7150DS			
248	6	G7150DS-250			

Mode of Operation
The control valve is operated by an electronic actuator that responds to a standard voltage for on/off control, a proportional VDC/4…20 mA, or 3-point control system. The actuator will then move the plug of the valve to the position dictated by the control signal thus changing the flow.

Product Features
Linear characteristic

Actuator Specifications

Control type	on/off, floating point, 2-10 VDC multi-function technology (MFT)
Manual override	all models
Electrical connection	3 ft [1m] cable with ½" conduit fitting

Valve Specifications

Service	chilled or hot water, 60% glycol
Flow characteristic	linear
Sizes	2½" - 6"
End fitting	flanged
Materials	
Body	cast iron
Stem	stainless steel
Plug	brass
Seat	
G7	bronze
G7...S	stainless steel
Packing	
G7	bronze trimmed: NLP
G7...S	stainless trimmed: TFE V-ring
Media temp range	Refer to valve specification pages in this section
Body pressure rating	
G7, 125# ANSI flange	125 psi
G7, 250# ANSI flange	250 psi
Maximum inlet pressure	
Water	150 psi (1034 kPa) G7, G7S 250 psi (1724 kPa) G7...250, G7S...250
Maximum differential pressure (ΔP)	
Water	25 psi (172 kPa) G7, G7...250 50 psi (345 kPa) G7S,G7S...250

067001 - 04/13 - Subject to change. © Belimo Aircontrols (USA), Inc.

FLOW PATTERN

G2 2-way Valve

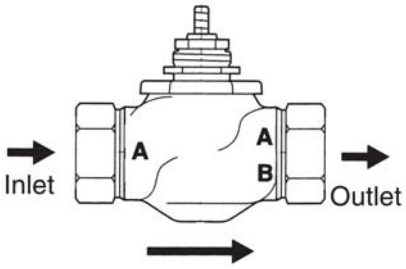

Stem Up
Open A to AB

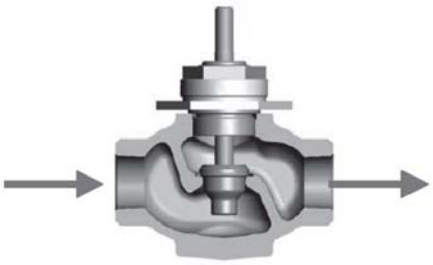

G3 3-way Mixing Valve

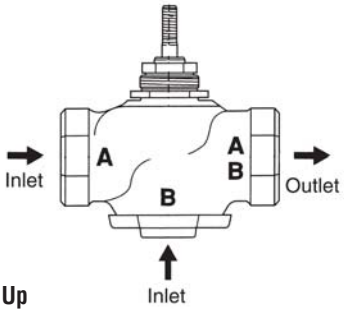

Stem Up
Open B to AB

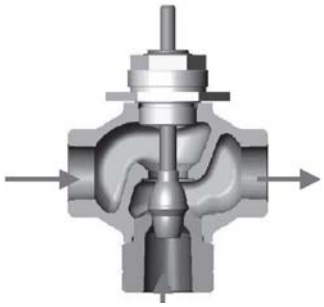

G3...D 3-way Diverting Valve

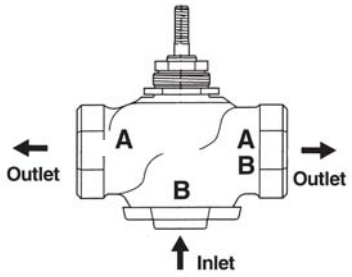

Stem Up
Open B to AB

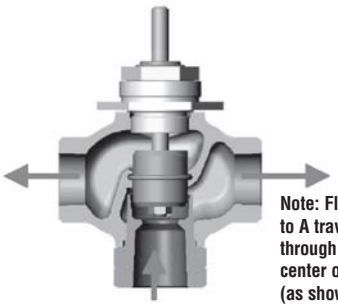

Note: Flow B to A travels through center of plug (as shown).

All valves shown stem down

VALVE ASSEMBLY SET-UP:

		2-WAY VALVE	2-WAY VALVE	3-WAY MIXING VALVE	3-WAY MIXING VALVE
		SPECIFY UPON ORDERING	SPECIFY UPON ORDERING	SPECIFY UPON ORDERING	SPECIFY UPON ORDERING
NON-SPRING RETURN	LV, SV Series	**NC:** Normally closed A to AB, valve will open upon increase in signal/power. Note: To change reverse the directional switch.	**NO:** Normally open A to AB, valve will close upon increase in signal/power. Note: To change reverse the directional switch.	**NC:** Normally closed A to AB, valve will open upon increase in signal/power. Note: To change reverse the directional switch.	**NO:** Normally open A to AB, valve will close upon increase in signal/power. Note: To change reverse the directional switch.
ELECTRONIC FAIL-SAFE	LVK, SVK Series				
	3-WAY DIVERTING VALVE				
NON-SPRING RETURN	LV, SV Series			**NC:** Normally closed B to AB, valve will open upon increase in signal/power. Note: To change reverse the directional switch.	**NO:** Normally open B to AB, valve will close upon increase in signal/power. Note: To change reverse the directional switch.
ELECTRONIC FAIL-SAFE	LVK, SVK Series				
SPRING RETURN	LF24 US, NFBUP-X1, AFBUP-X1 On/Off	**NO/FO** Normally open A to AB, valve will drive closed. Spring Action: Will fail open A to AB upon power loss.	**NC/FC** Normally closed A to AB, valve will drive open. Spring Action: Will fail closed A to AB upon power loss.	**NO/FO** Normally open A to AB, valve will drive closed. Spring Action: Will fail open A to AB upon power loss.	**NC/FC** Normally closed A to AB, valve will drive open. Spring Action: Will fail closed A to AB upon power loss.
	LF, NFB, NFX, AFB, AFX Series	**NC/FO** Normally closed A to AB, valve will open upon increase in signal. Note: To change valve to A to AB open, reverse CW/CCW switch. Spring Action: Will fail open A to AB upon power loss.	**NO/FC or NC/FC** Valve: Can be open or closed, will drive closed or open A to AB (can be chosen with CW/CCW switch). Spring Action: Closed A to AB upon power loss.	**NC/FO** Normally closed A to AB, valve will open upon increase in signal. Note: To change valve to A to AB open, reverse CW/CCW switch. Spring Action: Will fail open A to AB upon power loss.	**NO/FC or NC/FC** Valve: Can be open or closed, will drive closed or open A to AB (can be chosen with CW/CCW switch). Spring Action: Closed A to AB upon power loss.
			NO/FO Normally open A to AB Spring Action: Will fail open A to AB upon power loss. (NO or NC action can be chosen with CW/CCW switch).		**NO/FO** Normally open A to AB Spring Action: Will fail open A to AB upon power loss. (NO or NC action can be chosen with CW/CCW switch).

067001 - 04/13 - Subject to change. © Belimo Aircontrols (USA), Inc.

FLOW PATTERN – Flow Pattern is Marked on Valve

G6 2-way Valve
Stem Up = Open A to AB

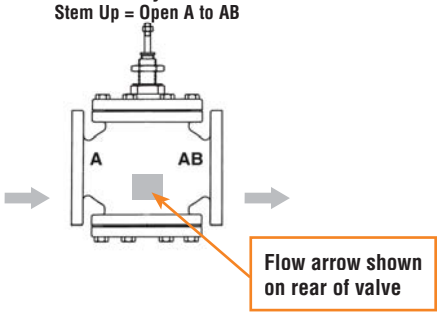

G7 3-way Mixing Valve
Stem Up = Open B to AB

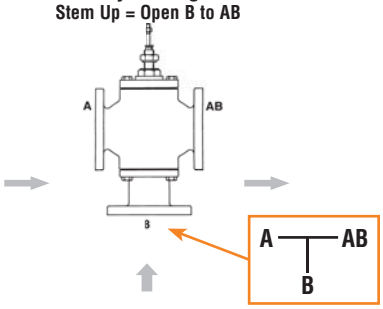

G7…D 3-way Diverting Valve
Stem Up = Open AB to B

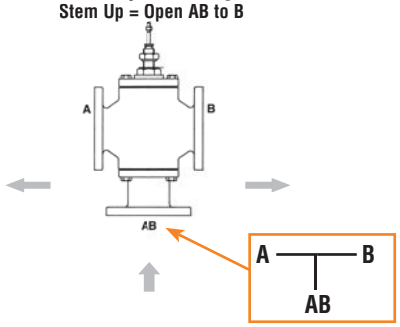

DEFAULT SET-UP:

		2-WAY VALVE		3-WAY VALVE	
		SPECIFY UPON ORDERING	SPECIFY UPON ORDERING	SPECIFY UPON ORDERING	SPECIFY UPON ORDERING
NON-SPRING RETURN STAYS IN LAST POSITION	**EV, RV Series**	**NC:** Normally closed A to AB, valve will open upon increase in signal/power. Note: To change valve to A to AB open, reverse the directional switch in actuator.	**NO:** Normally open A to AB, valve will close upon increase in signal/power. Note: To change valve to A to AB closed, reverse the directional switch in actuator.	**NC:** Normally closed A to AB, will open upon increase in signal/power. Note: To change valve to A to AB open, reverse the directional switch in actuator.	**NO:** Normally open A to AB, will close upon increase in signal/power. Note: To change valve to A to AB closed, reverse the directional switch in actuator.
SPRING RETURN NOTE FAIL POSITION	**AFB, AFX Series** On/Off	**NO/FO** Normally open A to AB valve will drive closed. Spring Action: Will fail open A to AB upon power loss.	**NC/FC** Normally closed A to AB valve will drive open. Spring Action: Will fail closed A to AB upon power loss.	**NO/FO** Normally open A to AB valve will drive closed. Spring Action: Will fail open A to AB upon power loss.	**NC/FC** Normally closed A to AB valve will drive open. Spring Action: Will fail closed A to AB upon power loss.
	AFB, AFX MFT Series	**NC/FO** Normally closed A to AB, valve will open upon increase in signal. Note: To change valve to A to AB open, reverse CW/CCW switch. Spring Action: Will fail open A to AB upon power loss.	**NO/FC or NC/FC** Normally Open/ Normally Closed: valve can be open or closed, will drive closed or open A to AB (can be chosen with CW/CCW switch). Spring Action: Closed A to AB upon power loss.	**NC/FO** Normally closed A to AB, valve will open upon increase in signal. Note: To change valve to A to AB open, reverse CW/CCW switch. Spring Action: Will fail open A to AB upon power loss.	**NO/FC or NC/FC** Normally Open/ Normally Closed: valve be open or closed, will drive closed or open A to AB (can be chosen with CW/CCW switch). Spring Action: Closed A to AB upon power loss.
			NO/FO Normally open A to AB Spring Action: Will fail open A to AB upon power loss. (NO or NC action can be chosen with CW/CCW switch).		**NO/FO** Normally open A to AB Spring Action: Will fail open A to AB upon power loss. (NO or NC action can be chosen with CW/CCW switch).
ELECTRONIC FAIL-SAFE	**AVK, GK Series**	**NC/FO** Normally closed A to AB, valve will open upon increase in signal. Note: To change valve to A to AB open, reverse CW/CCW switch. Fail Position: Will default fail A to AB open, from the factory. Fail position can be set from 0%-100%, in 10% increments.	**NO/FC or NC/FC** Valve: Can be open or closed, will drive closed or open A to AB (can be chosen with CW/CCW switch). Fail Position: Will default fail A to AB open, from the factory. Fail position can be set from 0%-100%, in 10% increments.	**NC/FO** Normally closed A to AB, valve will open upon increase in signal. Note: To change valve to A to AB open, reverse CW/CCW switch. Fail Position: Will default fail A to AB open, from the factory. Fail position can be set from 0%-100%, in 10% increments.	**NO/FC or NC/FC** Valve: Can be open or closed, will drive closed or open A to AB (can be chosen with CW/CCW switch). Fail Position: Will default fail A to AB open, from the factory. Fail position can be set from 0%-100%, in 10% increments.
			NO/FO Normally open A to AB Fail Position: Will default fail A to AB open, from the factory. Fail position can be set from 0%-100%, in 10% increments.		**NO/FO** Normally open A to AB Fail Position: Will default fail A to AB open, from the factory. Fail position can be set from 0%-100%, in 10% increments.
		3-WAY DIVERTING VALVE			
NON-SPRING RETURN	**EV, RV Series**				
SPRING RETURN	**AFB, AFX Series**			**NC:** Normally closed B to AB, valve will open upon increase in signal/power. Note: To change reverse the directional switch.	**NO:** Normally open B to AB, valve will close upon increase in signal/power. Note: To change reverse the directional switch.

067001 - 04/13 - Subject to change. © Belimo Aircontrols (USA), Inc.

This Page
Intentionally Left Blank

067001 - 04/13 - Subject to change. © Belimo Aircontrols (USA), Inc.

Valve Specifications

Service	chilled or hot water, 60% glycol, steam
Flow characteristic	G2 - equal percentage
Action	G2 stem up - open A to AB
Sizes	½", ¾", 1", 1¼", 1½", 2"
End fitting	NPT female ends
Materials:	
Body	bronze
Seat	bronze
Stem	stainless steel
Packing	spring loaded TFE
Disc	composition
Plug	brass
Media temp: Water	20°F to 250°F (-7°C to +120°C)
Steam	20°F to 250°F (-7°C to +120°C)
Ambient temp	32°F to 122°F (0°C to 50°C)
Body pressure rating	ANSI 250 (up to 400 psi below 150°F)
Maximum ΔP:	
Water	35 psi (241 kPa)
Steam	20 psi (103 kPa)
Rangeability	5:1 (G212) 15:1 (G213) 25:1 (G214) 40:1 (G215) 50:1 (G219) 60:1 (G220, G224) 75:1 (all others)
Leakage	G2 - ANSI V
Max steam inlet	35 psi (103 kPa)

5 YEAR WARRANTY

Non-Spring Return Actuators





ACTUATOR PART #	LVB24-3	LVB24-SR	LVX24-MFT	SVB24-3	SVB24-SR	SVX24-MFT
Control type	On/Off	Proportional	Proportional/MFT	On/Off	Proportional	Proportional/MFT
Manual override	•	•	•	•	•	•
Running time	90 seconds	90 seconds	90 seconds	90 seconds	90 seconds	90 seconds
Noise level	55 dB(A)	55 dB(A)	55 dB(A)	45 dB(A)	45 dB(A)	45 dB(A)
ELECTRICAL CONNECTION:						
3 ft cable, ½" conduit fitting	•	•	•	•	•	•

Globe Valve Model #	C_v Rating	Valve Nominal Size Inches	DN mm	Close-off psi						
G2... 2-WAY GLOBE VALVE WITH NON-SPRING RETURN ACTUATORS										
G212	0.4	½	15	250	$720.00	$800.00	$850.00			
G213	1.3	½	15	250	$723.00	$803.00	$853.00			
G214	2.2	½	15	250	$725.00	$805.00	$855.00			
G215	4.4	½	15	250	$728.00	$808.00	$858.00			
G219	5.5	¾	20	211	$734.00	$814.00	$864.00			
G220	7.5	¾	20	211	$740.00	$820.00	$870.00			
G224	10	1	25	250				$804.00	$884.00	$934.00
G225	14	1	25	250				$812.00	$892.00	$942.00
G232	20	1¼	32	236				$880.00	$960.00	$1,010.00
G240	28	1½	40	159				$1,012.00	$1,092.00	$1,142.00
G250	40	2	50	85				$1,149.00	$1,229.00	$1,279.00

MULTI-FUNCTION TECHNOLOGY

	PROGRAMMING CODES	Control Input	Running Time	Built-in Feedback	List Price
LINEAR ACTUATOR	G43	2-10 VDC	90 seconds	2-10 VDC	No Charge
	G53	0.5-10 VDC	90 seconds	0.5-10 VDC	No Charge
	W3M	0.02-5.00 seconds PWM	90 seconds	2-10 VDC	No Charge
	G13	Floating Point	90 seconds	2-10 VDC	No Charge
	G03	On/Off	90 seconds	2-10 VDC	No Charge

067001 - 04/13 - Subject to change. © Belimo Aircontrols (USA), Inc.

G3 Series Globe Valves, LV, SV Series Non-Spring Return Actuators

3-way Valve with Bronze Trim, Mixing and Diverting, NPT Female Ends

BELIMO

Valve Specifications

Service	chilled or hot water, 60% glycol
Flow characteristic	G3- linear
Action	G3: stem up - open B to AB G3D: stem up - open B to AB
Sizes	½", ¾", 1", 1¼", 1½", 2"
End fitting	NPT female ends
Materials:	
Body	bronze
Seat	bronze
Stem	stainless steel
Packing	spring loaded TFE
Disc	none
Plug	brass
Media temp: Water	20°F to 250°F (-7°C to +120°C)
Ambient temp	32°F to 122°F (0°C to 50°C)
Body pressure rating	ANSI 250 (up to 400 psi below 150°F)
Maximum ΔP: Water	35 psi (241 kPa)
Rangeability	500:1
Leakage	ANSI III

5 YEAR WARRANTY

Non-Spring Return Actuators





ACTUATOR PART #					LVB24-3	LVB24-SR	LVX24-MFT	SVB24-3	SVB24-SR	SVX24-MFT
Control type					On/Off, Floating Point	Proportional	Proportional/MFT	On/Off, Floating Point	Proportional	Proportional/MFT
Manual override					•	•	•	•	•	•
Running time					90 seconds	90 seconds	90 seconds	90 seconds	90 seconds	90 seconds
Noise level					55 dB(A)	55 dB(A)	55 dB(A)	45 dB(A)	45 dB(A)	45 dB(A)
ELECTRICAL CONNECTION:										
3 ft cable, ½" conduit fitting					•	•	•	•	•	•
Globe Valve Model #	**C_v Rating**	**Valve Nominal Size Inches**	**DN mm**	**Close-off psi**						
G3… 3-WAY MIXING GLOBE VALVE WITH NON-SPRING RETURN ACTUATORS										
G314	2.2	½	15	250	$767.00	$847.00	$897.00			
G315	4.4	½	15	250	$770.00	$850.00	$900.00			
G320	7.5	¾	20	211	$774.00	$854.00	$904.00			
G325	14	1	25	250				$834.00	$914.00	$964.00
G332	20	1¼	32	236				$914.00	$994.00	$1,044.00
G340	28	1½	40	159				$1,216.00	$1,296.00	$1,346.00
G350	41	2	50	85				$1,346.00	$1,426.00	$1,476.00
G3…D 3-WAY DIVERTING GLOBE VALVE WITH NON-SPRING RETURN ACTUATORS										
G315D	4.4	½	15	250	$946.00	$1,026.00	$1,076.00			
G320D	7.5	¾	20	250	$974.00	$1,054.00	$1,104.00			
G325D	15	1	25	250				$1,109.00	$1,189.00	$1,239.00
G332D	20	1¼	32	250				$1,401.00	$1,481.00	$1,531.00
G340D	28	1½	40	250				$1,516.00	$1,596.00	$1,646.00
G350D	40	2	50	250				$2,477.00	$2,557.00	$2,607.00

MULTI-FUNCTION TECHNOLOGY

	PROGRAMMING CODES	Control Input	Running Time	Built-in Feedback	List Price
LINEAR ACTUATOR	G43	2-10 VDC	90 seconds	2-10 VDC	No Charge
	G53	0.5-10 VDC	90 seconds	0.5-10 VDC	No Charge
	W3M	0.02-5.00 seconds PWM	90 seconds	2-10 VDC	No Charge
	G13	Floating Point	90 seconds	2-10 VDC	No Charge
	G03	On/Off	90 seconds	2-10 VDC	No Charge

067001 - 04/13 - Subject to change. © Belimo Aircontrols (USA), Inc.

Valve Specifications

Service	chilled or hot water, 60% glycol, steam
Flow characteristic	G2 - equal percentage
Action	G2 stem up - open A to AB
Sizes	½", ¾", 1", 1¼", 1½", 2"
End fitting	NPT female ends
Materials:	
Body	bronze
Seat	bronze
Stem	stainless steel
Packing	spring loaded TFE
Disc	composition
Plug	brass
Media Temp: Water	20°F to 250°F (-7°C to +120°C)
Steam	20°F to 250°F (-7°C to +120°C)
Ambient Temp	32°F to 122°F (0°C to 50°C)
Body pressure rating	ANSI 250 (up to 400 psi below 150°F)
Maximum ΔP:	
Water	35 psi (241 kPa)
Steam	20 psi (103 kPa)
Rangeability	5:1 (G212) 15:1 (G213) 25:1 (G214) 40:1 (G215) 50:1 (G219) 60:1 (G220, G224) 75:1 (all others)
Leakage	G2 - ANSI V
Max Steam Inlet	35 psi (103 kPa)

5 YEAR WARRANTY

Electronic Fail-Safe Actuators





ACTUATOR PART #		LVKB24-3	LVKB24-SR	LVKX24-MFT	SVKB24-3	SVKB24-SR	SVKX24-MFT
Control type		On/Off, Floating Point	Proportional	Proportional/MFT	On/Off, Floating Point	Proportional	Proportional/MFT
Manual override		•	•	•	•	•	•
Running time	Motor	90 seconds	90 seconds	90 seconds	90 seconds	90 seconds	90 seconds
	Fail-Safe	35 seconds	35 seconds	35 seconds	35 seconds	35 seconds	35 seconds
Noise level	Motor	55 dB(A)	55 dB(A)	55 dB(A)	45 dB(A)	45 dB(A)	45 dB(A)
	Fail-Safe	60 dB(A)	60 dB(A)	60 dB(A)	60 dB(A)	60 dB(A)	60 dB(A)
ELECTRICAL CONNECTION:							
3 ft cable, ½" conduit fitting		•	•	•	•	•	•

Globe Valve Model #	C_v Rating	Valve Nominal Size Inches	DN mm	Close-off psi					
G2... 2-WAY GLOBE VALVE WITH ELECTRONIC FAIL-SAFE ACTUATORS									
G212	0.4	½	15	250	$861.00	$931.00	$981.00		
G213	1.3	½	15	250	$863.00	$933.00	$983.00		
G214	2.2	½	15	250	$865.00	$935.00	$985.00		
G215	4.4	½	15	250	$868.00	$938.00	$988.00		
G219	5.5	¾	20	211	$918.00	$988.00	$1,038.00		
G220	7.5	¾	20	211	$923.00	$993.00	$1,043.00		
G224	10	1	25	250				$1,019.00	$1,089.00	$1,139.00
G225	14	1	25	250				$1,026.00	$1,096.00	$1,146.00
G232	20	1¼	32	236				$1,131.00	$1,201.00	$1,251.00
G240	28	1½	40	159				$1,204.00	$1,274.00	$1,324.00
G250	40	2	50	85				$1,414.00	$1,484.00	$1,534.00

MULTI-FUNCTION TECHNOLOGY

	PROGRAMMING CODES	Control Input	Running Time	Built-in Feedback	List Price
LINEAR ACTUATOR	G43	2-10 VDC	90 seconds	2-10 VDC	No Charge
	G53	0.5-10 VDC	90 seconds	0.5-10 VDC	No Charge
	W3M	0.02-5.00 seconds PWM	90 seconds	2-10 VDC	No Charge
	G13	Floating Point	90 seconds	2-10 VDC	No Charge
	G03	On/Off	90 seconds	2-10 VDC	No Charge

067001 - 04/13 - Subject to change. © Belimo Aircontrols (USA), Inc.

G3 Series Globe Valves, LVK, SVK Series Electronic Fail-Safe Actuators

3-way Valve with Bronze Trim, Mixing and Diverting, NPT Female Ends

BELIMO

Valve Specifications

Service	chilled or hot water, 60% glycol
Flow characteristic	G3-linear
Action	G3: stem up - open B to AB G3D: stem up - open B to AB
Sizes	½", ¾", 1", 1¼", 1½", 2"
End fitting	NPT female ends
Materials:	
Body	bronze
Seat	bronze
Stem	stainless steel
Packing	spring loaded TFE
Disc	none
Plug	brass
Media temp: Water	20°F to 250°F (-7°C to +120°C)
Ambient temp	32°F to 122°F (0°C to 50°C)
Body pressure rating	ANSI 250 (up to 400 psi below 150°F)
Maximum ΔP:	
Water	35 psi (241 kPa)
Rangeability	500:1
Leakage	ANSI III

5 YEAR WARRANTY

Electronic Fail-Safe Actuators





ACTUATOR PART #		LVKB24-3	LVKB24-SR	LVKX24-MFT	SVKB24-3	SVKB24-SR	SVKX24-MFT
Control type		On/Off, Floating Point	Proportional	Proportional/MFT	On/Off, Floating Point	Proportional	Proportional/MFT
Manual override		•	•	•	•	•	•
Running time	Motor	90 seconds	90 seconds	90 seconds	90 seconds	90 seconds	90 seconds
	Fail-Safe	35 seconds	35 seconds	35 seconds	35 seconds	35 seconds	35 seconds
Noise level	Motor	55 dB(A)	55 dB(A)	55 dB(A)	45 dB(A)	45 dB(A)	45 dB(A)
	Fail-Safe	60 dB(A)	60 dB(A)	60 dB(A)	60 dB(A)	60 dB(A)	60 dB(A)
ELECTRICAL CONNECTION:							
3 ft cable, ½" conduit fitting		•	•	•	•	•	•

Globe Valve Model #	C_v Rating	Valve Nominal Size Inches	DN mm	Close-off psi					
G3… 3-WAY MIXING GLOBE VALVE WITH ELECTRONIC FAIL-SAFE ACTUATORS									
G314	2.2	½	15	250	$899.00	$969.00	$1,019.00		
G315	4.4	½	15	250	$902.00	$972.00	$1,022.00		
G320	7.5	¾	20	211	$945.00	$1,015.00	$1,065.00		
G325	14	1	25	250				$1,055.00	$1,125.00	$1,175.00
G332	20	1¼	32	236				$1,238.00	$1,308.00	$1,358.00
G340	28	1½	40	159				$1,436.00	$1,506.00	$1,556.00
G350	41	2	50	85				$1,657.00	$1,727.00	$1,777.00
G3…D 3-WAY DIVERTING GLOBE VALVE WITH ELECTRONIC FAIL-SAFE ACTUATORS									
G315D	4.4	½	15	250	$1,108.00	$1,178.00	$1,228.00		
G320D	7.5	¾	20	250	$1,139.00	$1,209.00	$1,259.00		
G325D	15	1	25	250				$1,455.00	$1,525.00	$1,575.00
G332D	20	1¼	32	250				$1,737.00	$1,807.00	$1,857.00
G340D	28	1½	40	250				$1,866.00	$1,936.00	$1,986.00
G350D	40	2	50	250				$2,926.00	$2,996.00	$3,046.00

MULTI-FUNCTION TECHNOLOGY

	PROGRAMMING CODES	Control Input	Running Time	Built-in Feedback	List Price
LINEAR ACTUATOR	G43	2-10 VDC	90 seconds	2-10 VDC	No Charge
	G53	0.5-10 VDC	90 seconds	0.5-10 VDC	No Charge
	W3M	0.02-5.00 seconds PWM	90 seconds	2-10 VDC	No Charge
	G13	Floating Point	90 seconds	2-10 VDC	No Charge
	G03	On/Off	90 seconds	2-10 VDC	No Charge

067001 - 04/13 - Subject to change. © Belimo Aircontrols (USA), Inc.

Valve Specifications

Service	chilled or hot water, 60% glycol, steam
Flow characteristic	G2S: linear
Action	G2S: stem up - open A to AB
Sizes	½", ¾", 1", 1¼", 1½", 2"
End fitting	NPT female ends
Materials:	
Body	bronze
Seat	stainless steel
Stem	stainless steel
Packing	spring loaded TFE
Disc	Teflon®
Plug	stainless steel
Media temp: Water	20°F to 250°F (-7°C to +120°C)
Steam	20°F to 298°F (-7°C to +149°C)
Body pressure rating	ANSI 250 (up to 400 psi below 150°F)
Maximum ΔP:	
Water	35 psi (241 kPa)
Steam	35 psi (241 kPa)
Rangeability	5:1 (G212S) 15:1 (G213S) 25:1 (G214S) 40:1 (G215S) 50:1 (G219S) 60:1 (G220S, G224S) 75:1 (all others)
Leakage	G2S - ANSI V
Max steam inlet	100 psi (345 kPa)

5 YEAR WARRANTY

Non-Spring Return Actuators





ACTUATOR PART #					LVB24-3	LVB24-SR	LVX24-MFT	SVB24-3	SVB24-SR	SVX24-MFT
Control type					On/Off, Floating Point	Proportional	Proportional/MFT	On/Off, Floating Point	Proportional	Proportional/MFT
Manual override					•	•	•	•	•	•
Running time					90 seconds	90 seconds	90 seconds	90 seconds	90 seconds	90 seconds
Noise level					55 dB(A)	55 dB(A)	55 dB(A)	45 dB(A)	45 dB(A)	45 dB(A)
ELECTRICAL CONNECTION:										
3 ft cable, ½" conduit fitting					•	•	•	•	•	•
Globe Valve Model #	**C_v Rating**	**Valve Nominal Size Inches**	**DN mm**	**Close-off psi**						
G2...S 2-WAY GLOBE VALVE WITH NON-SPRING RETURN ACTUATORS										
G212S	0.4	½	15	250	$1,016.00	$1,096.00	$1,146.00			
G213S	1.3	½	15	250	$1,018.00	$1,098.00	$1,148.00			
G214S	2.2	½	15	250	$1,021.00	$1,101.00	$1,151.00			
G215S	4.4	½	15	250	$1,023.00	$1,103.00	$1,153.00			
G219S	5.5	¾	20	211	$1,124.00	$1,204.00	$1,254.00			
G220S	7.5	¾	20	211	$1,129.00	$1,209.00	$1,259.00			
G224S	10	1	25	250				$1,280.00	$1,360.00	$1,410.00
G225S	14	1	25	250				$1,286.00	$1,366.00	$1,416.00
G232S	20	1¼	32	236				$1,529.00	$1,609.00	$1,659.00
G240S	28	1½	40	159				$1,814.00	$1,894.00	$1,944.00
G250S	40	2	50	85				$2,022.00	$2,102.00	$2,152.00

MULTI-FUNCTION TECHNOLOGY

	PROGRAMMING CODES	Control Input	Running Time	Built-in Feedback	List Price
LINEAR ACTUATOR	G43	2-10 VDC	90 seconds	2-10 VDC	No Charge
	G53	0.5-10 VDC	90 seconds	0.5-10 VDC	No Charge
	W3M	0.02-5.00 seconds PWM	90 seconds	2-10 VDC	No Charge
	G13	Floating Point	90 seconds	2-10 VDC	No Charge
	G03	On/Off	90 seconds	2-10 VDC	No Charge

067001 - 04/13 - Subject to change. © Belimo Aircontrols (USA), Inc.

G2...S Series Globe Valves, LVK, SVK Series Electronic Fail-Safe Actuators

2-way Valve with Stainless Steel Trim, NPT Female Ends

Valve Specifications

Service	chilled or hot water, 60% glycol, steam
Flow characteristic	G2S: linear
Action	G2S: stem up - open A to AB
Sizes	½", ¾", 1", 1¼", 1½", 2"
End fitting	NPT female ends
Materials:	
Body	bronze
Seat	stainless steel
Stem	stainless steel
Packing	spring loaded TFE
Disc	Teflon®
Plug	stainless steel
Media Temp: Water	20°F to 250°F (-7°C to +120°C)
Steam	20°F to 298°F (-7°C to +149°C)
Body pressure rating	ANSI 250 (up to 400 psi below 150°F)
Maximum ΔP:	
Water	35 psi (241 kPa)
Steam	35 psi (241 kPa)
Rangeability:	5:1 (G212S) 15:1 (G213S) 25:1 (G214S) 40:1 (G215S) 50:1 (G219S) 60:1 (G220S, G224S) 75:1 (all others)
Leakage	G2S - ANSI V
Max Steam Inlet	100 psi (345 kPa)

5 YEAR WARRANTY

Electronic Fail-Safe Actuators





ACTUATOR PART #		LVKB24-3	LVKB24-SR	LVKX24-MFT	SVKB24-3	SVKB24-SR	SVKX24-MFT
Control type		On/Off, Floating Point	Proportional	Proportional/MFT	On/Off, Floating Point	Proportional	Proportional/MFT
Manual override		•	•	•	•	•	•
Running time	Motor	90 seconds	90 seconds	90 seconds	90 seconds	90 seconds	90 seconds
	Fail-Safe	35 seconds	35 seconds	35 seconds	35 seconds	35 seconds	35 seconds
Noise level	Motor	55 dB(A)	55 dB(A)	55 dB(A)	45 dB(A)	45 dB(A)	45 dB(A)
	Fail-Safe	60 dB(A)	60 dB(A)	60 dB(A)	60 dB(A)	60 dB(A)	60 dB(A)
ELECTRICAL CONNECTION:							
3 ft cable, ½" conduit fitting		•	•	•	•	•	•

Globe Valve Model #	C_v Rating	Valve Nominal Size Inches	DN mm	Close-off psi					
G2...S 2-WAY GLOBE VALVE WITH ELECTRONIC FAIL-SAFE ACTUATORS									
G212S	0.4	½	15	250	$1,159.00	$1,229.00	$1,279.00			
G213S	1.3	½	15	250	$1,161.00	$1,231.00	$1,281.00			
G214S	2.2	½	15	250	$1,163.00	$1,233.00	$1,283.00			
G215S	4.4	½	15	250	$1,166.00	$1,236.00	$1,286.00			
G219S	5.5	¾	20	211	$1,268.00	$1,338.00	$1,388.00			
G220S	7.5	¾	20	211	$1,276.00	$1,346.00	$1,396.00			
G224S	10	1	25	250				$1,516.00	$1,586.00	$1,636.00
G225S	14	1	25	250				$1,568.00	$1,638.00	$1,688.00
G232S	20	1¼	32	236				$2,883.00	$2,953.00	$3,003.00
G240S	28	1½	40	159				$2,195.00	$2,265.00	$2,315.00
G250S	40	2	50	85				$2,424.00	$2,494.00	$2,544.00

MULTI-FUNCTION TECHNOLOGY

	PROGRAMMING CODES	Control Input	Running Time	Built-in Feedback	List Price
LINEAR ACTUATOR	G43	2-10 VDC	90 seconds	2-10 VDC	No Charge
	G53	0.5-10 VDC	90 seconds	0.5-10 VDC	No Charge
	W3M	0.02-5.00 seconds PWM	90 seconds	2-10 VDC	No Charge
	G13	Floating Point	90 seconds	2-10 VDC	No Charge
	G03	On/Off	90 seconds	2-10 VDC	No Charge

067001 - 04/13 - Subject to change. © Belimo Aircontrols (USA), Inc.

Valve Specifications

Service		chilled or hot water, 60% glycol, steam
Flow characteristic		G2 - equal percentage G2S - linear
Action		G2, G2S: stem up - open A to AB
Sizes		½", ¾", 1", 1¼"
End fitting		NPT female ends
Materials:		
Body		bronze
Seat		bronze (G2S is stainless steel)
Stem		stainless steel
Packing		spring loaded TFE
Disc		composition (G2…S = Teflon®)
Plug		brass (G2S is stainless steel)
Media temp:	Water	20°F to 250°F (-7°C to +120°C) up to 300°F (149°C) on G2...S
	Steam	20°F to 280°F (-7°C to 138°C) 20°F to 338°F (-7°C to 170°C)
Ambient temp		32°F to 122°F (0°C to 50°C)
Body pressure rating		ANSI 250 (up to 400 psi below 150°F)
Maximum ΔP:	Water	35 psi (241 kPa)
	Steam	20 psi (138 kPa) (G2) 35 psi (241 kPa) (G2...S)
Rangeability		5:1 (G212(S)) 15:1 (G213(S)) 25:1 (G214(S)) 40:1 (G215(S)) 50:1 (G219(S)) 60:1 (G224(S), G225(S)) 75:1 (all others)
Leakage		G2(S) - ANSI V
Max Steam Inlet	G2	35 psi (241 kPa)
	G2S	100 psi (690 kPa)

Visit *www.belimo.us* to see additional Spring Return options.

Spring Return Actuators





ACTUATOR PART #		LF24 US	LF24-3 US	LF24-SR US	LF24-MFT US	NFBUP-X1	NFB24-SR-X1	NFX24-MFT-X1
Control type		On/Off	Floating Point	Proportional	Proportional/MFT	On/Off	Proportional	Proportional/MFT
Manual override						•	•	•
Running time	Motor	<40 to 75 seconds	150 seconds	150 seconds	150 seconds (variable)	<75 seconds	95 seconds	150 seconds (variable)
	Spring	<25 seconds	<25 seconds	<25 seconds	<25 seconds	<20 seconds	<20 seconds	<20 seconds
Noise level		<50 dB(A)	<30 dB(A)	<30 dB(A)	<30 dB(A)	<50 dB(A)	≤40 dB(A)	≤40 dB(A)
ELECTRICAL CONNECTION:								
3 ft cable, ½" conduit fitting		•	•	•	•	•	•	•

Globe Valve Model #	C_v Rating	Valve Nominal Size Inches	DN (mm)	Close-off psi						
G2…2-WAY GLOBE VALVE WITH SPRING RETURN ACTUATORS										
G212	0.4	½	15	250	$1,018.00	$1,088.00	$1,115.00	$1,176.00		
G213	1.3	½	15	250	$1,020.00	$1,090.00	$1,118.00	$1,179.00		
G214	2.2	½	15	250	$1,022.00	$1,095.00	$1,120.00	$1,181.00		
G215	4.4	½	15	250	$1,024.00	$1,097.00	$1,122.00	$1,183.00		
G219	5.5	¾	20	140	$1,050.00	$1,122.00	$1,147.00	$1,210.00		
G220	7.5	¾	20	140	$1,052.00	$1,125.00	$1,152.00	$1,215.00		
G224	10	1	25	220					$1,120.00	$1,223.00	$1,375.00
G225	14	1	25	220					$1,122.00	$1,225.00	$1,377.00
G232	20	1¼	32	140					$1,206.00	$1,309.00	$1,463.00
G2…S 2-WAY GLOBE VALVE WITH SPRING RETURN ACTUATORS										
G212S	0.4	½	15	210	$1,297.00	$1,334.00	$1,398.00	$1,461.00		
G213S	1.3	½	15	210	$1,299.00	$1,336.00	$1,400.00	$1,463.00		
G214S	2.2	½	15	210	$1,301.00	$1,338.00	$1,402.00	$1,466.00		
G215S	4.4	½	15	210	$1,303.00	$1,340.00	$1,404.00	$1,468.00		
G219S	5.5	¾	20	140	$1,336.00	$1,365.00	$1,615.00	$1,679.00		
G220S	7.5	¾	20	140	$1,338.00	$1,367.00	$1,617.00	$1,681.00		
G224S	10	1	25	220					$1,542.00	$1,653.00	$1,809.00
G225S	14	1	25	220					$1,544.00	$1,656.00	$1,811.00
G232S	20	1¼	32	140					$1,844.00	$1,962.00	$2,115.00

MULTI-FUNCTION TECHNOLOGY

PROGRAMMING CODES		Control Input	Running Time	Built-in Feedback	List Price
LF, NF DESCRIPTION					
P-10001	A01	2-10 VDC	150	2-10 VDC	No Charge
P-10002	A02	0-10 VDC	150	0-10 VDC	No Charge
P-10028	A28	0-10 VDC	100	0-10 VDC	No Charge
P-10063	A63	0.5-4.5 VDC	150	0.5-4.5 VDC	No Charge
P-10064	A64	5.5-10 VDC	150	5.5-10 VDC	No Charge
P-20002	W02	0.02-5.00 seconds PWM	150	2-10 VDC	No Charge
P-20003	W03	0.10-25.5 seconds PWM	150	2-10 VDC	No Charge
P-30001	F01	Floating Point	150	2-10 VDC	No Charge
P-40002	J02	On/Off	150	2-10 VDC	No Charge

Example: NFX24-MFT-X1 is the basic model. Add the P… pre-set MFT configuration number and list price to the actuator when ordering, as needed.
All other MFT actuators use P-codes. Most popular configurations available at no additional cost.

067001 - 04/13 - Subject to change. © Belimo Aircontrols (USA), Inc.

G2... (S) Series Globe Valves, Spring Return Actuators

2-way Valve with Bronze Trim / Stainless Steel Trim

Valve Specifications

Service		chilled or hot water, 60% glycol, steam
Flow characteristic		G2 - equal percentage G2S - linear
Action		G2, G2S: stem up - open A to AB
Sizes		1½", 2"
End fitting		NPT female ends
Materials:		
Body		bronze
Seat		bronze (G2S is stainless steel)
Stem		stainless steel
Packing		spring loaded TFE
Disc		composition (G2…S = Teflon®)
Plug		brass (G2S is stainless steel)
Media temp:	Water	20°F to 250°F (-7°C to +120°C) up to 300°F (149°C) on G2...S
	Steam	20°F to 280°F (-7°C to +138°C) 20°F to 338°F (-7°C to +170°C)
Ambient temp		32°F to 122°F (0°C to 50°C)
Body pressure rating		ANSI 250 (up to 400 psi below 150°F)
Maximum ΔP:		
	Water	35 psi (241 kPa)
	Steam	20 psi (138 kPa) (G2) 35 psi (241 kPa) (G2...S)
Rangeability		75:1
Leakage		G2(S) - ANSI V
Max steam inlet	G2	35 psi (241 kPa)
	G2S	100 psi (690 kPa)

Visit *www.belimo.us* to see additional Spring Return options.

Spring Return Actuators



ACTUATOR PART #		AFBUP-X1	AFB24-SR-X1	AFX24-MFT-X1
Control type		On/Off	Proportional	Proportional/MFT
Manual override		•	•	•
Running time	Motor	<75 seconds	95 seconds	150 seconds (variable with MFT)
	Spring	<20 seconds	<20 seconds	<20 seconds
Noise level		≤45 dB(A)	≤45 dB(A)	≤40 dB(A)
ELECTRICAL CONNECTION:				
3 ft cable, ½" conduit fitting		•	•	•

Globe Valve Model #	C_v Rating	Valve Nominal Size Inches	DN (mm)	Close-off psi			
G2…2-WAY GLOBE VALVE WITH SPRING RETURN ACTUATORS							
G240	28	1½	40	210	$1,572.00	$1,636.00	$1,700.00
G250	40	2	50	120	$1,630.00	$1,755.00	$1,760.00
G2…S 2-WAY GLOBE VALVE WITH SPRING RETURN ACTUATORS							
G240S	28	1½	40	210	$2,405.00	$2,471.00	$2,535.00
G250S	40	2	50	120	$2,596.00	$2,662.00	$2,723.00

MULTI-FUNCTION TECHNOLOGY

AF DESCRIPTION		Control Input	Running Time	Built-in Feedback	List Price
P-10001	A01	2-10 VDC	150	2-10 VDC	No Charge
P-10002	A02	0-10 VDC	150	0-10 VDC	No Charge
P-10028	A28	0-10 VDC	100	0-10 VDC	No Charge
P-10063	A63	0.5-4.5 VDC	150	0.5-4.5 VDC	No Charge
P-10064	A64	5.5-10 VDC	150	5.5-10 VDC	No Charge
P-20002	W02	0.02-5.00 seconds PWM	150	2-10 VDC	No Charge
P-20003	W03	0.10-25.5 seconds PWM	150	2-10 VDC	No Charge
P-30001	F01	Floating Point	150	2-10 VDC	No Charge
P-40002	J02	On/Off	150	2-10 VDC	No Charge

Example: AFX24-MFT-X1 is the basic model. Add the P… pre-set MFT configuration number and list price to the actuator when ordering, as needed.
All other MFT actuators use P-codes. Most popular configurations available at no additional cost.

067001 - 04/13 - Subject to change. © Belimo Aircontrols (USA), Inc.

Valve Specifications

Service	chilled or hot water, 60% glycol
Flow characteristic	G3(D): linear
Action	G3: stem up - open B to AB G3D: stem up - open B to AB
Sizes	½", ¾", 1", 1¼"
End fitting	NPT female ends
Materials:	
Body	bronze
Seat	bronze
Stem	stainless steel
Packing	spring loaded TFE
Disc	none
Plug	brass
Media temp: Water	20°F to 250°F (-7°C to +120°C)
Ambient temp	32°F to 122°F (0°C to 50°C)
Body pressure rating	ANSI 250 (up to 400 psi below 150°F)
Maximum ΔP:	
Water	35 psi (241 kPa)
Rangeability	500:1
Leakage	ANSI III

Visit *www.belimo.us* to see additional Spring Return options.

Spring Return Actuators





ACTUATOR PART #		LF24 US	LF24-3 US	LF24-SR US	LF24-MFT US	NFBUP-X1	NFB24-SR-X1	NFX24-MFT-X1
Control type		On/Off	Floating Point	Proportional	Proportional/MFT	On/Off	Proportional	Proportional/MFT
Manual override						•	•	•
Running time	Motor	<40 to 75 seconds	150 seconds	150 seconds	150 seconds	<75 seconds	95 seconds	150 seconds
	Spring	<25 seconds	<25 seconds	<25 seconds	<25 seconds	<20 seconds	<20 seconds	<20 seconds
Noise level		<50 dB(A)	<30 dB(A)	<30 dB(A)	<30 dB(A)	<50 dB(A)	≤40 dB(A)	≤40 dB(A)
ELECTRICAL CONNECTION:								
3 ft cable, ½" conduit fitting		•	•	•	•	•	•	•

Globe Valve Model #	C_v Rating	Valve Nominal Size Inches	DN (mm)	Close-off psi						
G3... 3-WAY MIXING GLOBE VALVE WITH SPRING RETURN ACTUATORS										
G314	2.2	½	15	210	$1,024.00	$1,097.00	$1,120.00	$1,181.00		
G315	4.4	½	15	210	$1,026.00	$1,099.00	$1,122.00	$1,183.00		
G320	7.5	¾	20	140	$1,029.00	$1,102.00	$1,125.00	$1,186.00		
G325	14	1	25	220					$981.00	$1,188.00	$1,365.00
G332	20	1¼	32	140					$1,074.00	$1,280.00	$1,461.00
G3...D 3-WAY DIVERTING GLOBE VALVE WITH SPRING RETURN ACTUATORS										
G315D	4.4	½	15	250	$1,195.00	$1,268.00	$1,291.00	$1,354.00		
G320D	7.5	¾	20	250	$1,217.00	$1,289.00	$1,311.00	$1,375.00		
G325D	14	1	25	250					$1,251.00	$1,457.00	$1,638.00
G332D	20	1¼	32	250					$1,610.00	$1,819.00	$2,005.00

MULTI-FUNCTION TECHNOLOGY

LF, NF, AF DESCRIPTION	PROGRAMMING CODES		Control Input	Running Time	Built-in Feedback	List Price
	P-10001	A01	2-10 VDC	150	2-10 VDC	No Charge
	P-10002	A02	0-10 VDC	150	0-10 VDC	No Charge
	P-10028	A28	0-10 VDC	100	0-10 VDC	No Charge
	P-10063	A63	0.5-4.5 VDC	150	0.5-4.5 VDC	No Charge
	P-10064	A64	5.5-10 VDC	150	5.5-10 VDC	No Charge
	P-20002	W02	0.02-5.00 seconds PWM	150	2-10 VDC	No Charge
	P-20003	W03	0.10-25.5 seconds PWM	150	2-10 VDC	No Charge
	P-30001	F01	Floating Point	150	2-10 VDC	No Charge
	P-40002	J02	On/Off	150	2-10 VDC	No Charge

Example: NFX24-MFT-X1 is the basic model. Add the P... pre-set MFT configuration number and list price to the actuator when ordering, as needed.
All other MFT actuators use P-codes. Most popular configurations available at no additional cost.

067001 - 04/13 - Subject to change. © Belimo Aircontrols (USA), Inc.

G3...(D) Series Globe Valves, Spring Return Actuators

3-way Valve with Bronze Trim, Mixing and Diverting, NPT Female Ends

BELIMO

Valve Specifications

Service	chilled or hot water, 60% glycol
Flow characteristic	G3(D): linear
Action	G3: stem up - open B to AB G3D: stem up - open B to AB
Sizes	1½", 2"
End fitting	NPT female ends
Materials:	
Body	bronze
Seat	bronze
Stem	stainless steel
Packing	spring loaded TFE
Disc	none
Plug	brass
Media temp: Water	20°F to 250°F (-7°C to +120°C)
Ambient temp	32°F to 122°F (0°C to 50°C)
Body pressure rating	ANSI 250 (up to 400 psi below 150°F)
Maximum ΔP: Water	35 psi (241 kPa)
Rangeability	500:1
Leakage	ANSI III

5 YEAR WARRANTY

Visit *www.belimo.us* to see additional Spring Return options.

Spring Return Actuators



ACTUATOR PART #		AFBUP-X1	AFB24-SR-X1	AFX24-MFT-X1
Control type		On/Off	Proportional	Proportional/MFT
Manual override		•	•	•
Running time	Motor	<75 seconds	95 seconds	150 seconds
	Spring	<20 seconds	<20 seconds	<20 seconds
Noise level		≤45 dB(A)	≤45 dB(A)	≤40 dB(A)
ELECTRICAL CONNECTION:				
3 ft cable, ½" conduit fitting		•	•	•

Globe Valve Model #	C_v Rating	Valve Nominal Size Inches	DN (mm)	Close-off psi			
G3... 3-WAY MIXING GLOBE VALVE WITH SPRING RETURN ACTUATORS							
G340	28	1½	40	210	$1,728.00	$1,790.00	$1,852.00
G350	41	2	50	120	$1,856.00	$1,934.00	$1,981.00
G3...D 3-WAY DIVERTING GLOBE VALVE WITH SPRING RETURN ACTUATORS							
G340D	28	1½	40	250	$2,103.00	$2,169.00	$2,228.00
G350D	40	2	50	250	$2,968.00	$3,032.00	$3,091.00

MULTI-FUNCTION TECHNOLOGY

PROGRAMMING CODES			Control Input	Running Time	Built-in Feedback	List Price
AF DESCRIPTION	P-10001	A01	2-10 VDC	150	2-10 VDC	No Charge
	P-10002	A02	0-10 VDC	150	0-10 VDC	No Charge
	P-10028	A28	0-10 VDC	100	0-10 VDC	No Charge
	P-10063	A63	0.5-4.5 VDC	150	0.5-4.5 VDC	No Charge
	P-10064	A64	5.5-10 VDC	150	5.5-10 VDC	No Charge
	P-20002	W02	0.02-5.00 seconds PWM	150	2-10 VDC	No Charge
	P-20003	W03	0.10-25.5 seconds PWM	150	2-10 VDC	No Charge
	P-30001	F01	Floating Point	150	2-10 VDC	No Charge
	P-40002	J02	On/Off	150	2-10 VDC	No Charge

Example: AFX24-MFT-X1 is the basic model. Add the P... pre-set MFT configuration number and list price to the actuator when ordering, as needed.
All other MFT actuators use P-codes. Most popular configurations available at no additional cost.

067001 - 04/13 - Subject to change. © Belimo Aircontrols (USA), Inc.

Valve Specifications

Service		chilled or hot water, 60% glycol, steam
Flow characteristic		equal percentage
Action		stem up - open A to AB
Sizes		2½", 3", 4", 5", 6"
End fitting		125 lb flanged
Materials:		
Body		iron
Seat		bronze
Stem		stainless steel
Packing		NLP
Plug		bronze
Media temp:	Water	32°F to 300°F (0°C to 149°C)
	Steam	32°F to 280°F (0°C to 138°C)
Body pressure rating		ANSI 125
Maximum ΔP:		
Water		25 psi (172 kPa)
Steam		15 psi (103 kPa)
Rangeability		50:1
Leakage		Class III
Max Water Inlet		150 psi (1034 kPa) @ 250°F
Max Steam Inlet		35 psi (241 kPa)

5 YEAR WARRANTY

Non-Spring Return Actuators



ACTUATOR PART #					EVB24-3	EVB24-SR	EVX24-MFT
Control type					On/Off, Floating Point	Proportional	Proportional/MFT
Manual override					•	•	•
Running time					90 seconds	90 seconds	90 seconds
Noise level					65 db(A)	65 db(A)	65 db(A)
ELECTRICAL CONNECTION:							
3 ft, cable, ½" conduit fitting					•	•	•
Globe Valve Model #	**C_V Rating**	**Valve Nominal Size Inches**	**Flanged Type**	**Close-Off ANSI III**			
G6...C 2-WAY GLOBE VALVE WITH NON-SPRING RETURN ACTUATORS							
G665C	65	2½	ANSI 125	140	$2,449.00	$2,529.00	$2,579.00
G680C	90	3	ANSI 125	140	$2,719.00	$2,799.00	$2,849.00
G6100C	170	4	ANSI 125	140	$3,426.00	$3,506.00	$3,556.00
G6125C	263	5	ANSI 125	140	$5,089.00	$5,169.00	$5,219.00
G6150C	344	6	ANSI 125	140	$5,540.00	$5,620.00	$5,670.00

MULTI-FUNCTION TECHNOLOGY

	PROGRAMMING CODES	Control Input	Running Time	Built-in Feedback	List Price
LINEAR ACTUATOR	G43	2-10 VDC	90 seconds	2-10 VDC	No Charge
	G53	0.5-10 VDC	90 seconds	0.5-10 VDC	No Charge
	W3M	0.02-5.00 seconds PWM	90 seconds	2-10 VDC	No Charge
	G13	Floating Point	90 seconds	2-10 VDC	No Charge
	G03	On/Off	90 seconds	2-10 VDC	No Charge

067001 - 04/13 - Subject to change. © Belimo Aircontrols (USA), Inc.

G6...C Series Flanged Globe Valve, Spring Return Actuators

2-way Pressure Compensated Valve with Bronze Trim– ANSI 125 Flanged

Valve Specifications

Service		chilled or hot water, 60% glycol, steam
Flow characteristic		equal percentage
Action		stem up - open A to AB
Sizes		2½", 3", 4", 5", 6"
End fitting		125 lb flanged
Materials:		
Body		iron
Seat		bronze
Stem		stainless steel
Packing		NLP
Plug		bronze
Media Temp:	Water	32°F to 300°F (0°C to 149°C)
	Steam	32°F to 280°F (0°C to 138°C)
Body pressure rating		ANSI 125
Maximum ΔP:		
Water		25 psi (172 kPa)
Steam		15 psi (103 kPa)
Rangeability		85:1 (G665C) 91:1 (G680C) 98:1 (G6100C) 100:1 (G6125C) 98:1 (G6150C)
Leakage		Class III
Max water inlet		150 psi (1034 kPa) @ 250°F
Max steam inlet		35 psi (241 kPa)

Visit *www.belimo.us* to see additional Spring Return options.

5 YEAR WARRANTY

Spring Return Actuators





ACTUATOR PART #		AFBUP-X1	AFX24-MFT-X1	2*AFBUP-X1	2*AFX24-MFT-X1
Control type		On/Off	Proportional/MFT	On/Off	Proportional/MFT
Manual override		•	•	•	•
Running time	Motor	<75 seconds	150 seconds	<75 seconds	150 seconds
	Spring	<20 seconds	<20 seconds	<20 seconds	<20 seconds
Noise level		≤45 dB(A)	≤40 dB(A)	≤45 dB(A)	≤40 dB(A)
ELECTRICAL CONNECTION:					
3 ft, cable, ½" conduit fitting		•	•	•	•

Globe Valve Model #	C_V Rating	Valve Nominal Size IN	Flanged Type	Close-Off ANSI III				
G6...C 2-WAY GLOBE VALVE WITH SPRING RETURN ACTUATORS								
G665C	65	2½	ANSI 125	140	$2,762.00	$2,900.00		
G680C	90	3	ANSI 125	140	$3,027.00	$3,165.00		
G6100C	170	4	ANSI 125	140			$3,813.00	$3,905.00
G6125C	263	5	ANSI 125	140			$5,330.00	$5,473.00
G6150C	344	6	ANSI 125	140			$5,884.00	$5,926.00

MULTI-FUNCTION TECHNOLOGY

PROGRAMMING CODES		Control Input	Running Time	Built-in Feedback	List Price
P-10001	A01	2-10 VDC	150	2-10 VDC	No Charge
P-10002	A02	0-10 VDC	150	0-10 VDC	No Charge
P-10028	A28	0-10 VDC	100	0-10 VDC	No Charge
P-10063	A63	0.5-4.5 VDC	150	0.5-4.5 VDC	No Charge
P-10064	A64	5.5-10 VDC	150	5.5-10 VDC	No Charge
P-20002	W02	0.02-5.00 seconds PWM	150	2-10 VDC	No Charge
P-20003	W03	0.10-25.5 seconds PWM	150	2-10 VDC	No Charge
P-30001	F01	Floating Point	150	2-10 VDC	No Charge
P-40002	J02	On/Off	150	2-10 VDC	No Charge

AF DESCRIPTION

Example: AFX24-MFT-X1 is the basic model. Add the P… pre-set MFT configuration number and list price to the actuator when ordering, as needed.
All other MFT actuators use P-codes. Most popular configurations available at no additional cost.
2*designates tandem.

067001 - 04/13 - Subject to change. © Belimo Aircontrols (USA), Inc.

Valve Specifications

Service		chilled or hot water, 60% glycol, steam
Flow characteristic		equal percentage
Action		stem up - open A to AB
Sizes		2½", 3", 4", 5", 6"
End fitting		125 lb flanged
Materials:		
Body		iron
Seat		bronze
Stem		stainless steel
Packing		NLP
Plug		bronze
Media temp:	Water	32°F to 300°F (0°C to 149°C)
	Steam	32°F to 280°F (0°C to 138°C)
Body pressure rating		ANSI 125
Maximum ΔP:		
Water		25 psi (172 kPa)
Steam		15 psi (103 kPa)
Rangeability		98:1 (G6100C) 100:1 (G6125C) 98:1 (G6150C)
Leakage		Class III
Max water inlet		150 psi (1034 kPa) @ 250°F
Max steam inlet		35 psi (241 kPa)

5 YEAR WARRANTY

Electronic Fail-Safe Actuators



ACTUATOR PART #		AVKB24-3	AVKX24-MFT
Control type		On/Off, Floating Point	Proportional/MFT
Manual override		•	•
Running time	Motor	90 seconds	90 seconds
	Fail-Safe	30 seconds	30 seconds
Noise level	Motor	60 dB(A)	60 dB(A)
	Fail-Safe	60 dB(A)	60 dB(A)
ELECTRICAL CONNECTION:			
3 ft, cable, ½" conduit fitting		•	•

Globe Valve Model #	C_V Rating	Valve Nominal Size Inches	Flanged Type	Close-Off ANSI III		
G6...C 2-WAY GLOBE VALVE WITH ELECTRONIC FAIL-SAFE ACTUATORS						
G665C	65	2½	ANSI 125	140	$2,629.00	$2,759.00
G680C	90	3	ANSI 125	140	$2,908.00	$3,038.00
G6100C	170	4	ANSI 125	140	$3,711.00	$3,841.00
G6125C	263	5	ANSI 125	140	$4,976.00	$5,106.00
G6150C	344	6	ANSI 125	140	$5,763.00	$5,893.00

MULTI-FUNCTION TECHNOLOGY

	PROGRAMMING CODES	Control Input	Running Time	Built-in Feedback	List Price
LINEAR ACTUATOR	G43	2-10 VDC	90 seconds	2-10 VDC	No Charge
	G53	0.5-10 VDC	90 seconds	0.5-10 VDC	No Charge
	W3M	0.02-5.00 seconds PWM	90 seconds	2-10 VDC	No Charge
	G13	Floating Point	90 seconds	2-10 VDC	No Charge
	G03	On/Off	90 seconds	2-10 VDC	No Charge

067001 - 04/13 - Subject to change. © Belimo Aircontrols (USA), Inc.

G6...CS Series Flanged Globe Valve, Non-Spring Return Actuators

2-way Pressure Compensated Valve with Stainless Steel Trim– ANSI 125 Flanged

Valve Specifications

Service	chilled or hot water, 60% glycol, steam
Flow characteristic	equal percentage
Action	stem up - open A to AB
Sizes	2½", 3", 4", 5", 6"
End fitting	125 lb flanged
Materials:	
Body	iron
Seat	stainless steel
Stem	stainless steel
Packing	TFE V-ring
Plug	stainless steel
Media temp: Water	32°F to 400°F (0°C to 204°C)
Steam	32°F to 338°F (0°C to 170°C)
Body pressure rating	ANSI 125
Maximum ΔP:	
Water	50 psi (345 kPa)
Steam	50 psi (345 kPa)
Rangeability	85:1 (G665CS) 91:1 (G680CS) 98:1 (G6100CS) 100:1 (G6125CS) 98:1 (G6150CS)
Leakage	Class III
Max water inlet	150 psi (1034 kPa) @ 250°F
Max steam inlet	100 psi (680 kPa)

5 YEAR WARRANTY

Non-Spring Return Actuators



ACTUATOR PART #					EVB24-3	EVB24-SR	EVX24-MFT
Control type					On/Off, Floating Point	Proportional	Proportional/MFT
Manual override					•	•	•
Running time					90 seconds	90 seconds	90 seconds
Noise level					65 dB(A)	65 dB(A)	65 dB(A)
ELECTRICAL CONNECTION:							
3 ft, cable, ½" conduit fitting					•	•	•
Globe Valve Model #	**C_V Rating**	**Valve Nominal Size Inches**	**Flanged Type**	**Close-Off ANSI III**			
G6...CS 2-WAY GLOBE VALVE WITH NON-SPRING RETURN ACTUATORS							
G665CS	65	2½	ANSI 125	125	$3,497.00	$3,577.00	$3,627.00
G680CS	90	3	ANSI 125	125	$4,073.00	$4,153.00	$4,203.00
G6100CS	170	4	ANSI 125	125	$5,454.00	$5,534.00	$5,584.00
G6125CS	263	5	ANSI 125	125	$7,240.00	$7,320.00	$7,370.00
G6150CS	344	6	ANSI 125	125	$7,723.00	$7,803.00	$7,853.00

MULTI-FUNCTION TECHNOLOGY

	PROGRAMMING CODES	Control Input	Running Time	Built-in Feedback	List Price
LINEAR ACTUATOR	G43	2-10 VDC	90 seconds	2-10 VDC	No Charge
	G53	0.5-10 VDC	90 seconds	0.5-10 VDC	No Charge
	W3M	0.02-5.00 seconds PWM	90 seconds	2-10 VDC	No Charge
	G13	Floating Point	90 seconds	2-10 VDC	No Charge
	G03	On/Off	90 seconds	2-10 VDC	No Charge

067001 - 04/13 - Subject to change. © Belimo Aircontrols (USA), Inc.

Valve Specifications

Service		chilled or hot water, 60% glycol, steam
Flow characteristic		linear
Action		stem up - open A to AB
Sizes		2½", 3", 4", 5", 6"
End fitting		125 lb flanged
Materials:		
Body		iron
Seat		stainless steel
Stem		stainless steel
Packing		TFE V-ring
Plug		stainless steel
Media temp:	Water	32°F to 400°F (0°C to 204°C)
	Steam	32°F to 338°F (0°C to 170°C)
Body pressure rating		ANSI 125
Maximum ΔP:		
Water		50 psi (345 kPa)
Steam		50 psi (345 kPa)
Rangeability		85:1 (G665LCS) 91:1 (G680LCS) 98:1 (G6100LCS) 100:1 (G6125LCS) 98:1 (G6150LCS)
Leakage		Class III
Max water inlet		150 psi (1034 kPa) @ 250°F
Max steam inlet		100 psi (680 kPa)

5 YEAR WARRANTY

Non-Spring Return Actuators



ACTUATOR PART #					EVB24-3	EVB24-SR	EVX24-MFT
Control type					On/Off, Floating Point	Proportional	Proportional/MFT
Manual override					•	•	•
Running time					90 seconds	90 seconds	90 seconds
Noise level					65 dB(A)	65 dB(A)	65 dB(A)
ELECTRICAL CONNECTION:							
3 ft, cable, ½" conduit fitting					•	•	•
Globe Valve Model #	**C_V Rating**	**Valve Nominal Size Inches**	**Flanged Type**	**Close-Off ANSI III**			
G6...LCS 2-WAY GLOBE VALVE WITH NON-SPRING RETURN ACTUATORS							
G665LCS	65	2½	ANSI 125	125	$3,537.00	$3,617.00	$3,667.00
G680LCS	90	3	ANSI 125	125	$4,163.00	$4,243.00	$4,293.00
G6100LCS	170	4	ANSI 125	125	$5,544.00	$5,624.00	$5,674.00
G6125LCS	263	5	ANSI 125	125	$7,100.00	$7,180.00	$7,230.00
G6150LCS	344	6	ANSI 125	125	$7,673.00	$7,753.00	$7,803.00

MULTI-FUNCTION TECHNOLOGY

	PROGRAMMING CODES	Control Input	Running Time	Built-in Feedback	List Price
LINEAR ACTUATOR	G43	2-10 VDC	90 seconds	2-10 VDC	No Charge
	G53	0.5-10 VDC	90 seconds	0.5-10 VDC	No Charge
	W3M	0.02-5.00 seconds PWM	90 seconds	2-10 VDC	No Charge
	G13	Floating Point	90 seconds	2-10 VDC	No Charge
	G03	On/Off	90 seconds	2-10 VDC	No Charge

067001 - 04/13 - Subject to change. © Belimo Aircontrols (USA), Inc.

G6...CS Series Flanged Globe Valve, Spring Return Actuators

2-way Pressure Compensated Valve with Stainless Steel Trim – ANSI 125 Flanged

Valve Specifications

Service	chilled or hot water, 60% glycol, steam
Flow characteristic	equal percentage
Action	stem up - open A to AB
Sizes	2½", 3", 4", 5", 6"
End fitting	125 lb flanged
Materials:	
Body	iron
Seat	stainless steel
Stem	stainless steel
Packing	TFE V-ring
Plug	stainless steel
Media temp: Water	32°F to 400°F (0°C to 204°C)
Steam	32°F to 338°F (0°C to 170°C)
Body pressure rating	ANSI 125
Maximum ΔP:	
Water	50 psi (345 kPa)
Steam	50 psi (345 kPa)
Rangeability	85:1 (G665CS) 91:1 (G680CS) 98:1 (G6100CS) 100:1 (G6125CS) 98:1 (G6150CS)
Leakage	Class III
Max water inlet	150 psi (1034 kPa) @ 250°F
Max steam inlet	100 psi (680 kPa)

Visit *www.belimo.us* to see additional Spring Return options.

5 YEAR WARRANTY

Spring Return Actuators





ACTUATOR PART #		AFBUP-X1	AFX24-MFT-X1	2*AFBUP-X1	2*AFX24-MFT-X1
Control type		On/Off	Proportional/MFT	On/Off	Proportional/MFT
Manual override		•	•	•	•
Running time	Motor	<75 seconds	150 seconds	<75 seconds	150 seconds
	Spring	<20 seconds	<20 seconds	<20 seconds	<20 seconds
Noise level		≤45 dB(A)	≤40 dB(A)	≤45 dB(A)	≤40 dB(A)
ELECTRICAL CONNECTION:					
3 ft, cable, ½" conduit fitting		•	•	•	•

Globe Valve Model	C_V Rating	Valve Nominal Size Inches	Flanged Type	Close-Off ANSI III				
G6...CS 2-WAY GLOBE VALVE WITH SPRING RETURN ACTUATORS								
G665CS	65	2½	ANSI 125	125	$3,800.00	$3,919.00		
G680CS	90	3	ANSI 125	85	$4,372.00	$4,491.00		
G6100CS	170	4	ANSI 125	125			$5,843.00	$6,048.00
G6125CS	263	5	ANSI 125	120			$7,916.00	$7,999.00
G6150CS	344	6	ANSI 125	120			$8,166.00	$8,370.00

MULTI-FUNCTION TECHNOLOGY

PROGRAMMING CODES		Control Input	Running Time	Built-in Feedback	List Price
P-10001	A01	2-10 VDC	150	2-10 VDC	No Charge
P-10002	A02	0-10 VDC	150	0-10 VDC	No Charge
P-10028	A28	0-10 VDC	100	0-10 VDC	No Charge
P-10063	A63	0.5-4.5 VDC	150	0.5-4.5 VDC	No Charge
P-10064	A64	5.5-10 VDC	150	5.5-10 VDC	No Charge
P-20002	W02	0.02-5.00 seconds PWM	150	2-10 VDC	No Charge
P-20003	W03	0.10-25.5 seconds PWM	150	2-10 VDC	No Charge
P-30001	F01	Floating Point	150	2-10 VDC	No Charge
P-40002	J02	On/Off	150	2-10 VDC	No Charge

AF DESCRIPTION

Example: AFX24-MFT-X1 is the basic model. Add the P… pre-set MFT configuration number and list price to the actuator when ordering, as needed.
All other MFT actuators use P-codes. Most popular configurations available at no additional cost.
2* designates tandem.

067001 - 04/13 - Subject to change. © Belimo Aircontrols (USA), Inc.

Valve Specifications

Service		chilled or hot water, 60% glycol, steam
Flow characteristic		equal percentage
Action		stem up - open A to AB
Sizes		2½", 3", 4", 5", 6"
End fitting		125 lb flanged
Materials:		
Body		iron
Seat		stainless steel
Stem		stainless steel
Packing		TFE V-ring
Plug		stainless steel
Media temp:	Water	32°F to 400°F (0°C to 204°C)
	Steam	32°F to 338°F (0°C to 170°C)
Body pressure rating		ANSI 125
Maximum ΔP:		
Water		50 psi (345 kPa)
Steam		50 psi (345 kPa)
Rangeability		98:1 (G6100CS) 100:1 (G6125CS) 98:1 (G6150CS)
Leakage		Class III
Max water inlet		150 psi (1034 kPa) @ 250°F
Max steam inlet		100 psi (680 kPa)

5 YEAR WARRANTY

Electronic Fail-Safe Actuators



ACTUATOR PART #		AVKB24-3	AVKX24-MFT
Control type		On/Off, Floating Point	Proportional/MFT
Manual override		•	•
Running time	Motor	90 seconds	90 seconds
	Fail-Safe	35 seconds	35 seconds
Noise level	Motor	60 dB(A)	60 dB(A)
	Fail-Safe	60 dB(A)	60 dB(A)
ELECTRICAL CONNECTION:			
3 ft, cable, ½" conduit fitting		•	•

Globe Valve Model	C_V Rating	Valve Nominal Size Inches	Flanged Type	Close-Off ANSI III		
G6...CS 2-WAY GLOBE VALVE WITH ELECTRONIC FAIL-SAFE ACTUATORS						
G665CS	65	2½	ANSI 125	125	$3,633.00	$3,713.00
G680CS	90	3	ANSI 125	125	$4,280.00	$4,360.00
G6100CS	170	4	ANSI 125	125	$5,593.00	$5,673.00
G6125CS	263	5	ANSI 125	125	$7,836.00	$7,916.00
G6150CS	344	6	ANSI 125	125	$7,848.00	$7,928.00

MULTI-FUNCTION TECHNOLOGY

	PROGRAMMING CODES	Control Input	Running Time	Built-in Feedback	List Price
LINEAR ACTUATOR	G43	2-10 VDC	90 seconds	2-10 VDC	No Charge
	G53	0.5-10 VDC	90 seconds	0.5-10 VDC	No Charge
	W3M	0.02-5.00 seconds PWM	90 seconds	2-10 VDC	No Charge
	G13	Floating Point	90 seconds	2-10 VDC	No Charge
	G03	On/Off	90 seconds	2-10 VDC	No Charge

067001 - 04/13 - Subject to change. © Belimo Aircontrols (USA), Inc.

G6...LCS Series Flanged Globe Valve, Spring Return Actuators

2-way Pressure Compensated Valve with Stainless Steel Trim – ANSI 125 Flanged

Valve Specifications

Service	chilled or hot water, 60% glycol, steam
Flow characteristic	linear
Action	stem up - open A to AB
Sizes	2½", 3", 4", 5", 6"
End fitting	125 lb flanged
Materials:	
Body	iron
Seat	stainless steel
Stem	stainless steel
Packing	TFE V-ring
Plug	stainless steel
Media temp: Water	32°F to 400°F (0°C to 204°C)
Steam	32°F to 338°F (0°C to 170°C)
Body pressure rating	ANSI 125
Maximum ΔP:	
Water	50 psi (345 kPa)
Steam	50 psi (345 kPa)
Rangeability	85:1 (G665LCS) 91:1 (G680LCS) 98:1 (G6100LCS) 100:1 (G6125LCS) 98:1 (G6150LCS)
Leakage	Class III
Max water inlet	150 psi (1034 kPa) @ 250°F
Max steam inlet	100 psi (680 kPa)

Visit *www.belimo.us* to see additional Spring Return options.

5 YEAR WARRANTY

Spring Return Actuators





ACTUATOR PART #		AFBUP-X1	AFX24-MFT-X1	2*AFBUP-X1	2*AFX24-MFT-X1
Control type		On/Off	Proportional/MFT	On/Off	Proportional/MFT
Manual override		•	•	•	•
Running time	Motor	<75 seconds	150 seconds	<75 seconds	150 seconds
	Spring	<20 seconds	<20 seconds	<20 seconds	<20 seconds
Noise level		≤45 dB(A)	≤40 dB(A)	≤45 dB(A)	≤40 dB(A)
ELECTRICAL CONNECTION:					
3 ft, cable, ½" conduit fitting		•	•	•	•

Globe Valve Model	C_V Rating	Valve Nominal Size Inches	Flanged Type	Close-Off ANSI III				
G6...LCS 2-WAY GLOBE VALVE WITH SPRING RETURN ACTUATORS								
G665LCS	65	2½	ANSI 125	125	$3,890.00	$3,990.00		
G680LCS	90	3	ANSI 125	125	$4,462.00	$4,552.00		
G6100LCS	170	4	ANSI 125	125			$5,933.00	$6,138.00
G6125LCS	263	5	ANSI 125	125			$8,006.00	$8,089.00
G6150LCS	344	6	ANSI 125	125			$8,256.00	$8,460.00

MULTI-FUNCTION TECHNOLOGY

PROGRAMMING CODES		Control Input	Running Time	Built-in Feedback	List Price
AF DESCRIPTION	P-10001 A01	2-10 VDC	150	2-10 VDC	No Charge
	P-10002 A02	0-10 VDC	150	0-10 VDC	No Charge
	P-10028 A28	0-10 VDC	100	0-10 VDC	No Charge
	P-10063 A63	0.5-4.5 VDC	150	0.5-4.5 VDC	No Charge
	P-10064 A64	5.5-10 VDC	150	5.5-10 VDC	No Charge
	P-20002 W02	0.02-5.00 seconds PWM	150	2-10 VDC	No Charge
	P-20003 W03	0.10-25.5 seconds PWM	150	2-10 VDC	No Charge
	P-30001 F01	Floating Point	150	2-10 VDC	No Charge
	P-40002 J02	On/Off	150	2-10 VDC	No Charge

Example: AFX24-MFT-X1 is the basic model. Add the P… pre-set MFT configuration number and list price to the actuator when ordering, as needed.
All other MFT actuators use P-codes. Most popular configurations available at no additional cost.
2* designates tandem.

067001 - 04/13 - Subject to change. © Belimo Aircontrols (USA), Inc.

Valve Specifications

Service		chilled or hot water, 60% glycol, steam
Flow characteristic		linear
Action		stem up - open A to AB
Sizes		2½", 3", 4", 5", 6"
End fitting		125 lb flanged
Materials:		
Body		iron
Seat		stainless steel
Stem		stainless steel
Packing		TFE V-ring
Plug		stainless steel
Media temp:	Water	32°F to 400°F (0°C to 204°C)
	Steam	32°F to 338°F (0°C to 170°C)
Body pressure rating		ANSI 125
Maximum ΔP:		
Water		50 psi (345 kPa)
Steam		50 psi (345 kPa)
Rangeability		98:1 (G6100LCS) 100:1 (G6125LCS) 98:1 (G6150LCS)
Leakage		Class III
Max water inlet		150 psi (1034 kPa) @ 250°F
Max steam inlet		100 psi (680 kPa)

5 YEAR WARRANTY

Electronic Fail-Safe Actuators



ACTUATOR PART #		AVKB24-3	AVKX24-MFT
Control type		On/Off, Floating Point	Proportional/MFT
Manual override		•	•
Running time	Motor	90 seconds	90 seconds
	Fail-Safe	35 seconds	35 seconds
Noise level	Motor	60 dB(A)	60 dB(A)
	Fail-Safe	60 dB(A)	60 dB(A)
ELECTRICAL CONNECTION:			
3 ft, cable, ½" conduit fitting		•	•

Globe Valve Model	Cv Rating	Valve Nominal Size Inches	Flanged Type	Close-Off ANSI III		
G6...LCS 2-WAY GLOBE VALVE WITH ELECTRONIC FAIL-SAFE ACTUATORS						
G665LCS	65	2½	ANSI 125	125	$3,633.00	$3,713.00
G680LCS	90	3	ANSI 125	125	$4,169.00	$4,249.00
G6100LCS	170	4	ANSI 125	125	$5,593.00	$5,673.00
G6125LCS	263	5	ANSI 125	125	$7,836.00	$7,916.00
G6150LCS	344	6	ANSI 125	125	$7,848.00	$7,928.00

MULTI-FUNCTION TECHNOLOGY

	PROGRAMMING CODES	Control Input	Running Time	Built-in Feedback	List Price
LINEAR ACTUATOR	G43	2-10 VDC	90 seconds	2-10 VDC	No Charge
	G53	0.5-10 VDC	90 seconds	0.5-10 VDC	No Charge
	W3M	0.02-5.00 seconds PWM	90 seconds	2-10 VDC	No Charge
	G13	Floating Point	90 seconds	2-10 VDC	No Charge
	G03	On/Off	90 seconds	2-10 VDC	No Charge

067001 - 04/13 - Subject to change. © Belimo Aircontrols (USA), Inc.

G6...-250 Series Flanged Globe Valve, Non-Spring Return Actuators

2-way Valve with Bronze Trim – ANSI 250 Flanged

BELIMO

Valve Specifications

Service	chilled or hot water, 60% glycol, steam
Flow characteristic	equal percentage
Action	stem up - open A to AB
Sizes	2½", 3", 4", 5", 6"
End fitting	250 lb flanged
Materials:	
Body	iron
Seat	bronze
Stem	stainless steel
Packing	NLP
Plug	bronze
Media Temp: Water	32°F to 350°F (0°C to 176°C)
Steam	32°F to 280°F (0°C to 138°C)
Body pressure rating	ANSI 250
Maximum ΔP:	
Water	25 psi (172 kPa)
Steam	15 psi (103 kPa)
Rangeability	50:1
Leakage	Class III
Max water inlet	250 psi (1724 kPa) @ 350°F
Max steam inlet	35 psi (241 kPa)

5 YEAR WARRANTY

Non-Spring Return Actuators



ACTUATOR PART #					EVB24-3	EVB24-SR	EVX24-MFT
Control type					On/Off, Floating Point	Proportional	Proportional/MFT
Manual override					•	•	•
Running time					90 seconds	90 seconds	90 seconds
Noise level					65 dB(A)	65 dB(A)	65 dB(A)
ELECTRICAL CONNECTION:							
3 ft, cable, ½" conduit fitting					•	•	•
Globe Valve Model #	**C_V Rating**	**Valve Nominal Size Inches**	**Flanged Type**	**Close-Off ANSI III**			
G6...-250 2-WAY GLOBE VALVE WITH NON-SPRING RETURN ACTUATORS							
G665C-250	65	2½	ANSI 250	310	$2,452.00	$2,532.00	$2,582.00
G680C-250	90	3	ANSI 250	310	$2,867.00	$2,947.00	$2,997.00
G6100C-250	170	4	ANSI 250	310	$3,776.00	$3,856.00	$3,906.00
G6125C-250	263	5	ANSI 250	310	$5,356.00	$5,436.00	$5,486.00
G6150C-250	344	6	ANSI 250	244	$5,597.00	$5,677.00	$5,727.00

MULTI-FUNCTION TECHNOLOGY

	PROGRAMMING CODES	Control Input	Running Time	Built-in Feedback	List Price
LINEAR ACTUATOR	G43	2-10 VDC	90 seconds	2-10 VDC	No Charge
	G53	0.5-10 VDC	90 seconds	0.5-10 VDC	No Charge
	W3M	0.02-5.00 seconds PWM	90 seconds	2-10 VDC	No Charge
	G13	Floating Point	90 seconds	2-10 VDC	No Charge
	G03	On/Off	90 seconds	2-10 VDC	No Charge

067001 - 04/13 - Subject to change. © Belimo Aircontrols (USA), Inc.

Valve Specifications

Service	chilled or hot water, 60% glycol, steam
Flow characteristic	equal percentage
Action	stem up - open A to AB
Sizes	2½", 3"
End fitting	250 lb flanged
Materials:	
Body	iron
Seat	bronze
Stem	stainless steel
Packing	NLP
Plug	bronze
Media Temp: Water	32°F to 350°F (0°C to 176°C)
Steam	32°F to 280°F (0°C to 138°C)
Body pressure rating	ANSI 250
Maximum ΔP:	
Water	25 psi (172 kPa)
Steam	15 psi (103 kPa)
Rangeability	50:1
Leakage	Class III
Max water inlet	250 psi (1724 kPa) @ 350°F
Max steam inlet	35 psi (241 kPa)

Visit *www.belimo.us* to see additional Spring Return options.

5 YEAR WARRANTY

Spring Return Actuators





ACTUATOR PART #		AFBUP-X1	AFX24-MFT-X1	2*AFBUP-X1	2*AFX24-MFT
Control type		On/Off	Proportional/MFT	On/Off	Proportional/MFT
Manual override		•	•	•	•
Running time	Motor	<75 seconds	150 seconds	<75 seconds	150 seconds
	Spring	<20 seconds	<20 seconds	<20 seconds	<20 seconds
Noise level		≤45 dB(A)	≤40 dB(A)	≤45 dB(A)	≤45 dB(A)
ELECTRICAL CONNECTION:					
3 ft, cable, ½" conduit fitting		•	•	•	•

Globe Valve Model #	C_V Rating	Valve Nominal Size Inches	Flanged Type	Close-Off ANSI III				
G6...-250 2-WAY GLOBE VALVE WITH SPRING RETURN ACTUATORS								
G665C-250	65	2½	ANSI 250	65	$2,820.00	$2,944.00		
G665C-250	65	2½	ANSI 250	100			$4,155.00	$4,335.00
G680C-250	90	3	ANSI 250	26	$3,152.00	$3,250.00		
G680C-250	90	3	ANSI 250	68			$6,916.00	$7,096.00

MULTI-FUNCTION TECHNOLOGY

AF DESCRIPTION	PROGRAMMING CODES		Control Input	Running Time	Built-in Feedback	List Price
	P-10001	A01	2-10 VDC	150	2-10 VDC	No Charge
	P-10002	A02	0-10 VDC	150	0-10 VDC	No Charge
	P-10028	A28	0-10 VDC	100	0-10 VDC	No Charge
	P-10063	A63	0.5-4.5 VDC	150	0.5-4.5 VDC	No Charge
	P-10064	A64	5.5-10 VDC	150	5.5-10 VDC	No Charge
	P-20002	W02	0.02-5.00 seconds PWM	150	2-10 VDC	No Charge
	P-20003	W03	0.10-25.5 seconds PWM	150	2-10 VDC	No Charge
	P-30001	F01	Floating Point	150	2-10 VDC	No Charge
	P-40002	J02	On/Off	150	2-10 VDC	No Charge

Example: AFX24-MFT-X1 is the basic model. Add the P… pre-set MFT configuration number and list price to the actuator when ordering, as needed.
Most popular configurations available at no additional cost.
2* designates tandem.

067001 - 04/13 - Subject to change. © Belimo Aircontrols (USA), Inc.

G6...-250 Series Flanged Globe Valve, Electronic Fail-Safe Actuators

2-way Valve with Bronze Trim – ANSI 250 Flanged

BELIMO

Valve Specifications

Service	chilled or hot water, 60% glycol, steam
Flow characteristic	equal percentage
Action	stem up - Open A to AB
Sizes	2½", 3", 4", 5", 6"
End fitting	250 lb flanged
Materials:	
Body	iron
Seat	bronze
Stem	stainless steel
Packing	NLP
Plug	bronze
Media Temp: Water	32°F to 350°F (0°C to 176°C)
Steam	32°F to 280°F (0°C to 138°C)
Body pressure rating	ANSI 250
Maximum ΔP:	
Water	25 psi (172 kPa)
Steam	15 psi (103 kPa)
Rangeability	50:1
Leakage	Class III
Max water inlet	250 psi (1724 kPa) @ 350°F
Max steam inlet	35 psi (241 kPa)

5 YEAR WARRANTY

Electronic Fail-Safe Actuators



ACTUATOR PART #		AVKB24-3	AVKX24-MFT
Control type		On/Off, Floating Point	Proportional/MFT
Manual override		•	•
Running time	Motor	90 seconds	90 seconds
	Fail-Safe	35 seconds	35 seconds
Noise level	Motor	60 dB(A)	60 dB(A)
	Fail-Safe	60 dB(A)	60 dB(A)
ELECTRICAL CONNECTION:			
3 ft, cable, ½" conduit fitting		•	•

Globe Valve Model #	C_V Rating	Valve Nominal Size Inches	Flanged Type	Close-Off ANSI III		
G6...-250 2-WAY GLOBE VALVE WITH ELECTRONIC FAIL-SAFE ACTUATORS						
G665C-250	65	2½	ANSI 250	310	$2,627.00	$2,757.00
G680C-250	90	3	ANSI 250	310	$2,970.00	$3,100.00
G6100C-250	170	4	ANSI 250	310	$4,345.00	$4,475.00
G6125C-250	263	5	ANSI 250	232	$5,459.00	$5,589.00
G6150C-250	344	6	ANSI 250	150	$7,159.00	$7,289.00

MULTI-FUNCTION TECHNOLOGY

	PROGRAMMING CODES	Control Input	Running Time	Built-in Feedback	List Price
LINEAR ACTUATOR	G43	2-10 VDC	90 seconds	2-10 VDC	No Charge
	G53	0.5-10 VDC	90 seconds	0.5-10 VDC	No Charge
	W3M	0.02-5.00 seconds PWM	90 seconds	2-10 VDC	No Charge
	G13	Floating Point	90 seconds	2-10 VDC	No Charge
	G03	On/Off	90 seconds	2-10 VDC	No Charge

067001 - 04/13 - Subject to change. © Belimo Aircontrols (USA), Inc.

Valve Specifications

Service	chilled or hot water, 60% glycol, steam
Flow characteristic	equal percentage
Action	stem up - open A to AB
Sizes	2½", 3", 4", 5", 6"
End fitting	250 lb flanged
Materials:	
Body	iron
Seat	stainless steel
Stem	stainless steel
Packing	TFE V-ring
Plug	stainless steel
Media Temp: Water	32°F to 400°F (0°C to 204°C)
Steam	32°F to 338°F (0°C to 170°C)
Body pressure rating	ANSI 250
Maximum ΔP	
Water	50 psi (345 kPa)
Steam	50 psi (345 kPa)
Rangeability	50:1
Leakage	Class III
Max water inlet	250 psi (1724 kPa) @ 350°F
Rangeability	50:1

5 YEAR WARRANTY

Non-Spring Return Actuators



ACTUATOR PART #					EVB24-3	EVB24-SR	EVX24-MFT
Control type					On/Off, Floating Point	Proportional	Proportional/MFT
Manual override					•	•	•
Running time					90 seconds	90 seconds	90 seconds
Noise level					65 dB(A)	65 dB(A)	65 dB(A)
ELECTRICAL CONNECTION:							
3 ft, cable, ½" conduit fitting					•	•	•
Globe Valve Model #	**C_V Rating**	**Valve Nominal Size Inches**	**Flanged Type**	**Close-Off ANSI III**			
G6...S-250 2-WAY GLOBE VALVE WITH NON-SPRING RETURN ACTUATORS							
G665CS-250	65	2½	ANSI 250	250	$3,921.00	$4,001.00	$4,051.00
G680CS-250	90	3	ANSI 250	250	$4,198.00	$4,278.00	$4,328.00
G6100CS-250	170	4	ANSI 250	250	$5,721.00	$5,801.00	$5,851.00
G6125CS-250	263	5	ANSI 250	250	$8,021.00	$8,101.00	$8,151.00
G6150CS-250	344	6	ANSI 250	244	$10,121.00	$10,201.00	$10,251.00

MULTI-FUNCTION TECHNOLOGY

	PROGRAMMING CODES	Control Input	Running Time	Built-in Feedback	List Price
LINEAR ACTUATOR	G43	2-10 VDC	90 seconds	2-10 VDC	No Charge
	G53	0.5-10 VDC	90 seconds	0.5-10 VDC	No Charge
	W3M	0.02-5.00 seconds PWM	90 seconds	2-10 VDC	No Charge
	G13	Floating Point	90 seconds	2-10 VDC	No Charge
	G03	On/Off	90 seconds	2-10 VDC	No Charge

067001 - 04/13 - Subject to change. © Belimo Aircontrols (USA), Inc.

G6...CS-250 Series Flanged Globe Valve, Spring Return Actuators

2-way Valve with Stainless Steel Trim – ANSI 250 Flanged

BELIMO

Valve Specifications	
Service	chilled or hot water, 60% glycol, steam
Flow characteristic	equal percentage
Action	stem up - open A to AB
Sizes	2½", 3"
End fitting	250 lb flanged
Materials:	
Body	iron
Seat	stainless steel
Stem	stainless steel
Packing	TFE V-ring
Plug	stainless steel
Media Temp: Water	32°F to 400°F (0°C to 204°C)
Steam	32°F to 338°F (0°C to 170°C)
Body pressure rating	ANSI 250
Maximum ΔP:	
Water	50 psi (345 kPa)
Steam	50 psi (345 kPa)
Rangeability	50:1
Leakage	Class III
Max water inlet	250 psi (1724 kPa) @ 350°F
Max steam inlet	100 psi (680 kPa)
Rangeability	50:1

5 YEAR WARRANTY

Visit *www.belimo.us* to see additional Spring Return options.

Spring Return Actuators





ACTUATOR PART #		AFBUP-X1	AFX24-MFT-X1	2*AFBUP-X1	2*AFX24-MFT-X1
Control type		On/Off	Proportional/MFT	On/Off	Proportional/MFT
Manual override		•	•	•	•
Running time	Motor	<75 seconds	150 seconds	<75 seconds	150 seconds
	Spring	<20 seconds	<20 seconds	<20 seconds	<20 seconds
Noise level		≤45 dB(A)	≤40 dB(A)	≤45 dB(A)	≤40 dB(A)
ELECTRICAL CONNECTION:					
3 ft, cable, ½" conduit fitting		•	•	•	•

Globe Valve Model #	Cv Rating	Valve Nominal Size IN	Flanged Type	Close-Off ANSI III				
G6...CS-250 2-WAY GLOBE VALVE WITH SPRING RETURN ACTUATORS								
G665CS-250	65	2½	ANSI 250	40	$3,161.00	$3,762.00		
G665CS-250	65	2½	ANSI 250	65			$4,292.00	$4,627.00
G680CS-250	90	3	ANSI 250	26	$3,656.00	$4,256.00		
G680CS-250	90	3	ANSI 250	68			$4,786.00	$5,121.00

MULTI-FUNCTION TECHNOLOGY

PROGRAMMING CODES		Control Input	Running Time	Built-in Feedback	List Price
AF DESCRIPTION P-10001	A01	2-10 VDC	150	2-10 VDC	No Charge
P-10002	A02	0-10 VDC	150	0-10 VDC	No Charge
P-10028	A28	0-10 VDC	100	0-10 VDC	No Charge
P-10063	A63	0.5-4.5 VDC	150	0.5-4.5 VDC	No Charge
P-10064	A64	5.5-10 VDC	150	5.5-10 VDC	No Charge
P-20002	W02	0.02-5.00 seconds PWM	150	2-10 VDC	No Charge
P-20003	W03	0.10-25.5 seconds PWM	150	2-10 VDC	No Charge
P-30001	F01	Floating Point	150	2-10 VDC	No Charge
P-40002	J02	On/Off	150	2-10 VDC	No Charge

Example: AFX24-MFT-X1 is the basic model. Add the P… pre-set MFT configuration number and list price to the actuator when ordering, as needed.
Most popular configurations available at no additional cost.
2* designates tandem.

067001 - 04/13 - Subject to change. © Belimo Aircontrols (USA), Inc.

Valve Specifications

Service	chilled or hot water, 60% glycol, steam
Flow characteristic	equal percentage
Action	stem up - open A to AB
Sizes	2½", 3", 4", 5", 6"
End fitting	250 lb flanged
Materials:	
Body	iron
Seat	stainless steel
Stem	stainless steel
Packing	TFE V-ring
Plug	stainless steel
Media Temp: Water	32°F to 300°F (0°C to 204°C)
Steam	32°F to 338°F (0°C to 170°C)
Body pressure rating	ANSI 250
Maximum ΔP:	
Water	50 psi (345 kPa)
Steam	50 psi (345 kPa)
Rangeability	50:1
Leakage	Class III
Max water inlet	250 psi (1724 kPa) @ 350°F
Max steam inlet	100 psi (680 kPa)
Rangeability	50:1

5 YEAR WARRANTY

Electronic Fail-Safe Actuators





ACTUATOR PART #		AVKB24-3	AVKX24-MFT	2*GKX24-MFT-X1
Control type		On/Off, Floating Point	Proportional/MFT	Proportional/MFT
Manual override		•	•	•
Running time	Motor	90 seconds	90 seconds	150 seconds
	Fail-Safe	35 seconds	35 seconds	35 seconds
Noise level	Motor	60 dB(A)	60 dB(A)	<45 dB(A)
	Fail-Safe	60 dB(A)	60 dB(A)	
ELECTRICAL CONNECTION:				
3 ft, cable, ½" conduit fitting		•	•	•

Globe Valve Model #	C_V Rating	Valve Nominal Size Inches	Flanged Type	Close-Off ANSI III			
G6...S-250 2-WAY GLOBE VALVE WITH ELECTRONIC FAIL-SAFE ACTUATORS							
G665CS-250	65	2½	ANSI 250	250	$4,273.00	$4,403.00	
G680CS-250	90	3	ANSI 250	250	$4,837.00	$4,967.00	
G6100CS-250	170	4	ANSI 250	250	$6,226.00	$6,356.00	
G6125CS-250	263	5	ANSI 250	232	$8,566.00	$8,696.00	
G6150CS-250	344	6	ANSI 250	150 (GK 250)	$11,357.00	$11,487.00	$12,187.00

MULTI-FUNCTION TECHNOLOGY

	PROGRAMMING CODES		Control Input	Running Time	Built-in Feedback	List Price
GK DESCRIPTION	P-10001	A01	2-10 VDC	150	2-10 VDC	No Charge
	P-10002	A02	0-10 VDC	150	0-10 VDC	No Charge
	P-10028	A28	0-10 VDC	100	0-10 VDC	No Charge
	P-10063	A63	0.5-4.5 VDC	150	0.5-4.5 VDC	No Charge
	P-10064	A64	5.5-10 VDC	150	5.5-10 VDC	No Charge
	P-20002	W02	0.02-5.00 seconds PWM	150	2-10 VDC	No Charge
	P-20003	W03	0.10-25.5 seconds PWM	150	2-10 VDC	No Charge
	P-30001	F01	Floating Point	150	2-10 VDC	No Charge
	P-40002	J02	On/Off	150	2-10 VDC	No Charge

Most popular configurations available at no additional cost.
2* designates tandem.

MULTI-FUNCTION TECHNOLOGY

	PROGRAMMING CODES	Control Input	Running Time	Built-in Feedback	List Price
LINEAR ACTUATOR	G43	2-10 VDC	90 seconds	2-10 VDC	No Charge
	G53	0.5-10 VDC	90 seconds	0.5-10 VDC	No Charge
	W3M	0.02-5.00 seconds PWM	90 seconds	2-10 VDC	No Charge
	G13	Floating Point	90 seconds	2-10 VDC	No Charge
	G03	On/Off	90 seconds	2-10 VDC	No Charge

067001 - 04/13 - Subject to change. © Belimo Aircontrols (USA), Inc.

G7...(D) Series Flanged Globe Valve, Non-Spring Return Actuators

3-way Valve with Bronze Trim - ANSI 125 Flanged, Mixing and Diverting

BELIMO

Valve Specifications	
Service	chilled or hot water, 60% glycol
Flow characteristic	linear
Action	mixing: stem up - open B to AB diverting: stem up - open AB to B
Sizes	2½", 3", 4", 5", 6"
End fitting	125 lb. flanged
Materials:	
Body	iron
Seat	bronze
Stem	stainless steel
Packing	NLP
Plug	bronze
Media temp:	
Water	
G7	32°F to 300°F (0°C to 149°C)
G7D (2½-5")	32°F to 300°F (0°C to 149°C)
G7D (6"-8")	32°F to 150°F (0°C to 65°C)
Body pressure rating	ANSI 125
Maximum ΔP:	
Water	25 psi (172 kPa)
Rangeability	50:1
Leakage	Class III
Max Water Inlet	150 psi (1034 kPa) @ 250°F

5 YEAR WARRANTY

Non-Spring Return Actuators





ACTUATOR PART #					EVB24-3	EVB24-SR	EVX24-MFT	RVB24-3	RVX24-MFT
Control type					On/Off, Floating Point	Proportional	Proportional/MFT	On/Off, Floating Point	Proportional/MFT
Manual override					•	•	•	•	•
Running time					90 seconds	90 seconds	90 seconds	90 seconds	90 seconds
Noise level					65 dB(A)	65 dB(A)	65 dB(A)	65 dB(A)	65 dB(A)
ELECTRICAL CONNECTION:									
3 ft cable, ½" conduit fitting					•	•	•	•	•
Globe Valve Model #	C_v Rating	Valve Nominal Size Inches	Flanged Type	Close-off ANSI III					
G7...3-WAY MIXING FLANGED GLOBE VALVE WITH NON-SPRING RETURN ACTUATORS									
G765	68	2½	ANSI 125	94	$2,472.00	$2,552.00	$3,002.00		
G780	91	3	ANSI 125	63	$2,697.00	$2,777.00	$3,017.00		
G7100	190	4	ANSI 125	33	$3,347.00	$3,427.00	$3,477.00		
G765	68	2½	ANSI 125	125				$3,200.00	$3,330.00
G780	91	3	ANSI 125	125				$3,417.00	$3,547.00
G7100	190	4	ANSI 125	68				$3,937.00	$4,067.00
G7125	280	5	ANSI 125	42				$5,728.00	$5,858.00
G7150	340	6	ANSI 125	28				$6,386.00	$6,516.00
G7...D 3-WAY DIVERTING FLANGED GLOBE VALVE WITH NON-SPRING RETURN ACTUATORS									
G765D	68	2½	ANSI 125	140	$4,749.00	$4,829.00	$4,879.00		
G780D	85	3	ANSI 125	140	$5,348.00	$5,428.00	$5,478.00		
G7100D	154	4	ANSI 125	140	$6,205.00	$6,285.00	$6,335.00		
G7125D	195	5	ANSI 125	140	$8,298.00	$8,378.00	$8,328.00		
G7150D	248	6	ANSI 125	175	$10,433.00	$10,513.00	$10,563.00		

MULTI-FUNCTION TECHNOLOGY

	PROGRAMMING CODES	Control Input	Running Time	Built-in Feedback	List Price
LINEAR ACTUATOR	G43	2-10 VDC	90 seconds	2-10 VDC	No Charge
	G53	0.5-10 VDC	90 seconds	0.5-10 VDC	No Charge
	W3M	0.02-5.00 seconds PWM	90 seconds	2-10 VDC	No Charge
	G13	Floating Point	90 seconds	2-10 VDC	No Charge
	G03	On/Off	90 seconds	2-10 VDC	No Charge

067001 - 04/13 - Subject to change. © Belimo Aircontrols (USA), Inc.

Valve Specifications

Service	chilled or hot water, 60% glycol
Flow characteristic	linear
Action	mixing: stem up - open B to AB diverting: stem up - open AB to B
Sizes	2½", 3", 4", 5", 6"
End fitting	125 lb. flanged
Materials:	
Body	iron
Seat	bronze
Stem	stainless steel
Packing	NLP
Plug	bronze
Media temp:	
Water	
G7	32°F to 300°F (0°C to 149°C)
G7D (2½-5")	32°F to 300°F (0°C to 149°C)
G7D (6"-8")	32°F to 150°F (0°C to 65°C)
Body pressure rating	ANSI 125
Maximum ΔP:	
Water	25 psi (172 kPa)
Rangeability	50:1
Leakage	Class III
Max water inlet	150 psi (1034 kPa) @ 250°F

Visit *www.belimo.us* to see additional Spring Return options.

5 YEAR WARRANTY

Spring Return Actuators





ACTUATOR PART #		AFBUP-X1	AFX24-MFT-X1	2*AFBUP-X1	2*AFX24-MFT-X1
Control type		On/Off	Proportional/MFT	On/Off	Proportional/MFT
Manual override		•	•	•	•
Running time	Motor	<75 seconds	150 seconds	<75 seconds	150 seconds
	Spring	<20 seconds	<20 seconds	<20 seconds	<20 seconds
Noise level		≤45 dB(A)	≤40 dB(A)	≤45 dB(A)	≤40 dB(A)
ELECTRICAL CONNECTION:					
3 ft cable, ½" conduit fitting		•	•	•	•

Globe Valve Model #	C_v Rating	Valve Nominal Size Inches	Flanged Type	Close-off ANSI III				
G7... 3-WAY MIXING FLANGED GLOBE VALVE WITH SPRING RETURN ACTUATORS								
G765	68	2½	ANSI 125	65	$2,335.00	$2,456.00		
G765	68	2½	ANSI 125	100			$3,000.00	$3,227.00
G780	91	3	ANSI 125	25	$2,550.00	$2,676.00		
G780	91	3	ANSI 125	45			$3,217.00	$3,468.00
G7100	190	4	ANSI 125	15			$3,959.00	$4,006.00
G7...D 3-WAY DIVERTING FLANGED GLOBE VALVE WITH SPRING RETURN ACTUATORS								
G765D	68	2½	ANSI 125	140	$4,695.00	$4,833.00		
G780D	85	3	ANSI 125	140	$5,281.00	$5,405.00		
G7100D	154	4	ANSI 125	140	$6,078.00	$6,223.00		
G7125D	195	5	ANSI 125	140			$8,449.00	$8,725.00
G7150D	248	6	ANSI 125	140			$10,879.00	$11,201.00

MULTI-FUNCTION TECHNOLOGY

PROGRAMMING CODES			Control Input	Running Time	Built-in Feedback	List Price
AF DESCRIPTION	P-10001	A01	2-10 VDC	150	2-10 VDC	No Charge
	P-10002	A02	0-10 VDC	150	0-10 VDC	No Charge
	P-10028	A28	0-10 VDC	100	0-10 VDC	No Charge
	P-10063	A63	0.5-4.5 VDC	150	0.5-4.5 VDC	No Charge
	P-10064	A64	5.5-10 VDC	150	5.5-10 VDC	No Charge
	P-20002	W02	0.02-5.00 seconds PWM	150	2-10 VDC	No Charge
	P-20003	W03	0.10-25.5 seconds PWM	150	2-10 VDC	No Charge
	P-30001	F01	Floating Point	150	2-10 VDC	No Charge
	P-40002	J02	On/Off	150	2-10 VDC	No Charge

Example: AFX24-MFT-X1 is the basic model. Add the P... pre-set MFT configuration number and list price to the actuator when ordering, as needed.
All other MFT actuators use P-codes. Most popular configurations available at no additional cost.
2* designates tandem.

067001 - 04/13 - Subject to change. © Belimo Aircontrols (USA), Inc.

G7...(D) Series Flanged Globe Valve, Electronic Fail-Safe Actuators

3-way Valve with Bronze Trim - ANSI 125 Flanged, Mixing and Diverting

BELIMO

Valve Specifications

Service	chilled or hot water, 60% glycol
Flow characteristic	linear
Action	mixing: stem up - open B to AB diverting: stem up - open AB to B
Sizes	2½", 3", 4", 5", 6"
End fitting	125 lb. flanged
Materials:	
Body	iron
Seat	bronze
Stem	stainless steel
Packing	NLP
Plug	bronze
Media temp:	
Water	
G7	32°F to 300°F (0°C to 149°C)
G7D (2½-5")	32°F to 300°F (0°C to 149°C)
G7D (6"-8")	32°F to 150°F (0°C to 65°C)
Body pressure rating	ANSI 125
Maximum ΔP:	
Water	25 psi (172 kPa)
Rangeability	50:1
Leakage	Class III
Max water inlet	150 psi (1034 kPa) @ 250°F

5 YEAR WARRANTY

Electronic Fail-Safe Actuators





ACTUATOR PART #		AVKB24-3	AVKX24-MFT	2*GKX24-MFT-X1
Control type		On/Off, Floating Point	Proportional/MFT	Proportional/MFT
Manual override		•	•	•
Running time	Motor	90 seconds	90 seconds	150 seconds
	Fail-Safe	35 seconds	35 seconds	35 seconds
Noise level	Motor	60 dB(A)	60 dB(A)	<45 dB(A)
	Fail-Safe	60 dB(A)	60 dB(A)	
ELECTRICAL CONNECTION:				
3 ft cable, ½" conduit fitting		•	•	•

Globe Valve Model #	C_v Rating	Valve Nominal Size Inches	Flanged Type	Close-off ANSI III			
G7...3-WAY MIXING FLANGED GLOBE VALVE WITH ELECTRONIC FAIL-SAFE ACTUATORS							
G765	68	2½	ANSI 125	71	$2,492.00	$2,622.00	
G780	91	3	ANSI 125	47	$2,546.00	$2,676.00	
G765	68	2½	ANSI 125	125			$5,077.00
G780	91	3	ANSI 125	125			$5,317.00
G7100	190	4	ANSI 125	37			$5,871.00
G7125	280	5	ANSI 125	22			$7,660.00
G7150	340	6	ANSI 125	14			$8,320.00
G7...D 3-WAY DIVERTING FLANGED GLOBE VALVE WITH ELECTRONIC FAIL-SAFE ACTUATORS							
G765D	68	2½	ANSI 125	140	$4,703.00	$4,833.00	
G780D	85	3	ANSI 125	140	$5,275.00	$5,405.00	
G7100D	154	4	ANSI 125	140	$5,912.00	$6,042.00	
G7125D	195	5	ANSI 125	140	$8,341.00	$8,471.00	
G7150D	248	6	ANSI 125	175	$10,745.00	$10,875.00	

MULTI-FUNCTION TECHNOLOGY

	PROGRAMMING CODES		Control Input	Running Time	Built-in Feedback	List Price
GK DESCRIPTION	P-10001	A01	2-10 VDC	150	2-10 VDC	No Charge
	P-10002	A02	0-10 VDC	150	0-10 VDC	No Charge
	P-10028	A28	0-10 VDC	100	0-10 VDC	No Charge
	P-10063	A63	0.5-4.5 VDC	150	0.5-4.5 VDC	No Charge
	P-10064	A64	5.5-10 VDC	150	5.5-10 VDC	No Charge
	P-20002	W02	0.02-5.00 seconds PWM	150	2-10 VDC	No Charge
	P-20003	W03	0.10-25.5 seconds PWM	150	2-10 VDC	No Charge
	P-30001	F01	Floating Point	150	2-10 VDC	No Charge
	P-40002	J02	On/Off	150	2-10 VDC	No Charge

Most popular configurations available at no additional cost.
2* designates tandem.

MULTI-FUNCTION TECHNOLOGY

	PROGRAMMING CODES	Control Input	Running Time	Built-in Feedback	List Price
LINEAR ACTUATOR	G43	2-10 VDC	90 seconds	2-10 VDC	No Charge
	G53	0.5-10 VDC	90 seconds	0.5-10 VDC	No Charge
	W3M	0.02-5.00 seconds PWM	90 seconds	2-10 VDC	No Charge
	G13	Floating Point	90 seconds	2-10 VDC	No Charge
	G03	On/Off	90 seconds	2-10 VDC	No Charge

067001 - 04/13 - Subject to change. © Belimo Aircontrols (USA), Inc.

Valve Specifications

Service	chilled or hot water, 60% glycol
Flow characteristic	linear
Action	mixing: stem up - open B to AB diverting: stem up - open AB to B
Sizes	2½", 3", 4", 5", 6"
End fitting	125 lb. flanged
Materials:	
Body	iron
Seat	stainless steel
Stem	stainless steel
Packing	TFE V-ring
Plug	stainless steel
Media temp:	
Water	
G7	32°F to 300°F (0°C to 149°C)
G7D (2½-5")	32°F to 300°F (0°C to 149°C)
G7D (6"-8")	32°F to 150°F (0°C to 65°C)
Body pressure rating	ANSI 125
Maximum ΔP:	
Water	50 psi (340 kPa)
Rangeability	50:1
Leakage	Class III
Max water inlet	150 psi (1034 kPa) @ 250°F

5 YEAR WARRANTY

Non-Spring Return Actuators





ACTUATOR PART #					EVB24-3	EVB24-SR	EVX24-MFT	RVB24-3	RVX24-MFT
Control type					On/Off, Floating Point	Proportional	Proportional/MFT	On/Off, Floating Point	Proportional/MFT
Manual override					•	•	•	•	•
Running time					90 seconds	90 seconds	90 seconds	90 seconds	90 seconds
Noise level					65 dB(A)	65 dB(A)	65 dB(A)	65 dB(A)	65 dB(A)
ELECTRICAL CONNECTION:									
3 ft cable, ½" conduit fitting					•	•	•	•	•
Globe Valve Model #	**C_v Rating**	**Valve Nominal Size Inches**	**Flanged Type**	**Close-off ANSI III**					
G7...S 3-WAY MIXING FLANGED GLOBE VALVE WITH NON-SPRING RETURN ACTUATORS									
G765S	68	2½	ANSI 125	94	$3,150.00	$3,230.00	$3,280.00		
G780S	91	3	ANSI 125	63	$3,726.00	$3,806.00	$3,856.00		
G7100S	190	4	ANSI 125	33	$4,654.00	$4,734.00	$4,784.00		
G765S	68	2½	ANSI 125	125				$3,572.00	$4,138.00
G780S	91	3	ANSI 125	125				$4,146.00	$4,708.00
G7100S	190	4	ANSI 125	68				$4,872.00	$5,434.00
G7125S	280	5	ANSI 125	42				$7,303.00	$7,883.00
G7150S	340	6	ANSI 125	28				$8,994.00	$9,516.00
G7...DS 3-WAY DIVERTING FLANGED GLOBE VALVE WITH NON-SPRING RETURN ACTUATORS									
G765DS	68	2½	ANSI 125	140	$6,874.00	$6,954.00	$7,004.00		
G780DS	85	3	ANSI 125	140	$7,810.00	$7,890.00	$7,940.00		
G7100DS	154	4	ANSI 125	140	$8,906.00	$8,986.00	$9,036.00		
G7125DS	195	5	ANSI 125	140	$12,865.00	$12,945.00	$12,995.00		
G7150DS	248	6	ANSI 125	175	$14,746.00	$14,826.00	$14,876.00		

MULTI-FUNCTION TECHNOLOGY

	PROGRAMMING CODES	Control Input	Running Time	Built-in Feedback	List Price
LINEAR ACTUATOR	G43	2-10 VDC	90 seconds	2-10 VDC	No Charge
	G53	0.5-10 VDC	90 seconds	0.5-10 VDC	No Charge
	W3M	0.02-5.00 seconds PWM	90 seconds	2-10 VDC	No Charge
	G13	Floating Point	90 seconds	2-10 VDC	No Charge
	G03	On/Off	90 seconds	2-10 VDC	No Charge

067001 - 04/13 - Subject to change. © Belimo Aircontrols (USA), Inc.

G7...S(DS) Series Flanged Globe Valve, Spring Return Actuators

3-way Valve with Stainless Steel Trim – ANSI 125 Flanged, Mixing and Diverting

BELIMO

Valve Specifications	
Service	chilled or hot water, 60% glycol
Flow characteristic	linear
Action	mixing: stem up - open B to AB diverting: stem up - open AB to B
Sizes	2½", 3", 4", 5", 6"
End fitting	125 lb flanged
Materials:	
Body	iron
Seat	stainless steel
Stem	stainless steel
Packing	TFE V-ring
Plug	stainless steel
Media temp:	
Water	
G7	32°F to 300°F (0°C to 149°C)
G7DS (2½-5")	32°F to 300°F (0°C to 149°C)
G7DS (6"-8")	32°F to 150°F (0°C to 65°C)
Body pressure rating	ANSI 125
Maximum ΔP	
Water	50 psi (340 kPa)
Rangeability	50:1
Leakage	Class III
Max water inlet	150 psi (1034 kPa) @ 250°F

Visit *www.belimo.us* to see additional Spring Return options.

5 YEAR WARRANTY

Spring Return Actuators





ACTUATOR PART #		AFBUP-X1	AFX24-MFT-X1	2*AFBUP-X1	2*AFX24-MFT-X1
Control type		On/Off	Proportional/MFT	On/Off	Proportional/MFT
Manual override		•	•	•	•
Running time	Motor	<75 seconds	150 seconds	<75 seconds	150 seconds
	Spring	<20 seconds	<20 seconds	<20 seconds	<20 seconds
Noise level		≤45 dB(A)	≤40 dB(A)	≤45 dB(A)	≤40 dB(A)
ELECTRICAL CONNECTION:					
3 ft, cable, ½" conduit fitting		•	•	•	•

Globe Valve Model #	Cv Rating	Valve Nominal Size Inches	Flanged Type	Close-Off ANSI III				
G7...S 3-WAY MIXING FLANGED GLOBE VALVE WITH SPRING RETURN ACTUATORS								
G765S	68	2½"	ANSI 125	40	$3,095.00	$3,262.00		
G765S	68	2½"	ANSI 125	65			$3,724.00	$4,154.00
G780S	91	3"	ANSI 125	26	$3,646.00	$3,824.00		
G780S	91	3"	ANSI 125	43			$4,297.00	$4,627.00
G7100S	190	4"	ANSI 125	12			$5,413.00	$5,390.00
G7...DS 3-WAY DIVERTING FLANGED GLOBE VALVE WITH SPRING RETURN ACTUATORS								
G765DS	68	2½	ANSI 125	140	$6,797.00	$6,964.00		
G780DS	85	3	ANSI 125	140	$7,734.00	$7,901.00		
G7100DS	154	4	ANSI 125	140	$8,988.00	$9,155.00		
G7125DS	195	5	ANSI 125	140			$13,177.00	$13,506.00
G7150DS	248	6	ANSI 125	125			$15,291.00	$15,621.00

MULTI-FUNCTION TECHNOLOGY

AF DESCRIPTION	PROGRAMMING CODES		Control Input	Running Time	Built-in Feedback	List Price
	P-10001	A01	2-10 VDC	150	2-10 VDC	No Charge
	P-10002	A02	0-10 VDC	150	0-10 VDC	No Charge
	P-10028	A28	0-10 VDC	100	0-10 VDC	No Charge
	P-10063	A63	0.5-4.5 VDC	150	0.5-4.5 VDC	No Charge
	P-10064	A64	5.5-10 VDC	150	5.5-10 VDC	No Charge
	P-20002	W02	0.02-5.00 sec. PWM	150	2-10 VDC	No Charge
	P-20003	W03	0.10-25.5 sec. PWM	150	2-10 VDC	No Charge
	P-30001	F01	Floating Point	150	2-10 VDC	No Charge

Example: AFX24-MFT-X1 is the basic model. Add the P... pre-set MFT configuration number and list price to the actuator when ordering, as needed.
Note: Most popular configurations available at no additional cost.
2* designates tandem.

067001 - 04/13 - Subject to change. © Belimo Aircontrols (USA), Inc.

Valve Specifications

Service	chilled or hot water, 60% glycol
Flow characteristic	linear
Action	mixing: stem up - open B to AB diverting: stem up - open AB to B
Sizes	2½", 3", 4", 5", 6"
End fitting	125 lb. flanged
Materials:	
Body	iron
Seat	stainless steel
Stem	stainless steel
Packing	TFE V-ring
Packing	stainless steel
Media temp:	
Water	
G7	32°F to 300°F (0°C to 149°C)
G7DS (2½-5")	32°F to 300°F (0°C to 149°C)
G7DS (6"-8")	32°F to 150°F (0°C to 65°C)
Body pressure rating	ANSI 125
Maximum ΔP:	
Water	50 psi (340 kPa)
Rangeability	50:1
Leakage	Class III
Max water inlet	150 psi (1034 kPa) @ 250°F

5 YEAR WARRANTY

Electronic Fail-Safe Actuators





ACTUATOR PART #		AVKB24-3	AVKX24-MFT	2*GKX24-MFT-X1
Control type		On/Off, Floating Point	Proportional/MFT	Proportional/MFT
Manual override		•	•	•
Running time	Motor	90 seconds	90 seconds	150 seconds
	Fail-Safe	35 seconds	35 seconds	35 seconds
Noise level	Motor	60 dB(A)	60 dB(A)	<45 dB(A)
	Fail-Safe	60 dB(A)	60 dB(A)	
ELECTRICAL CONNECTION:				
3 ft cable, ½" conduit fitting		•	•	•

Globe Valve Model #	C_v Rating	Valve Nominal Size Inches	Flanged Type	Close-off ANSI III			
G7...S 3-WAY MIXING FLANGED GLOBE VALVE WITH ELECTRONIC FAIL-SAFE ACTUATORS							
G765S	68	2½	ANSI 125	71	$3,132.00	$3,262.00	
G780S	91	3	ANSI 125	47	$3,694.00	$3,824.00	
G765S	68	2½	ANSI 125	125			$6,003.00
G780S	91	3	ANSI 125	125			$6,475.00
G7100S	190	4	ANSI 125	37			$7,239.00
G7125S	280	5	ANSI 125	22			$9,687.00
G7150S	340	6	ANSI 125	14			$11,319.00
G7...DS 3-WAY DIVERTING FLANGED GLOBE VALVE WITH ELECTRONIC FAIL-SAFE ACTUATORS							
G765DS	68	2½	ANSI 125	140	$6,834.00	$6,964.00	
G780DS	85	3	ANSI 125	140	$7,771.00	$7,901.00	
G7100DS	154	4	ANSI 125	140	$8,758.00	$8,888.00	
G7125DS	195	5	ANSI 125	140	$12,983.00	$13,113.00	
G7150DS	248	6	ANSI 125	175	$15,036.00	$15,166.00	

MULTI-FUNCTION TECHNOLOGY

	PROGRAMMING CODES		Control Input	Running Time	Built-in Feedback	List Price
GK DESCRIPTION	P-10001	A01	2-10 VDC	150	2-10 VDC	No Charge
	P-10002	A02	0-10 VDC	150	0-10 VDC	No Charge
	P-10028	A28	0-10 VDC	100	0-10 VDC	No Charge
	P-10063	A63	0.5-4.5 VDC	150	0.5-4.5 VDC	No Charge
	P-10064	A64	5.5-10 VDC	150	5.5-10 VDC	No Charge
	P-20002	W02	0.02-5.00 seconds PWM	150	2-10 VDC	No Charge
	P-20003	W03	0.10-25.5 seconds PWM	150	2-10 VDC	No Charge
	P-30001	F01	Floating Point	150	2-10 VDC	No Charge
	P-40002	J02	On/Off	150	2-10 VDC	No Charge

Most popular configurations available at no additional cost.
2* designates tandem.

MULTI-FUNCTION TECHNOLOGY

	PROGRAMMING CODES	Control Input	Running Time	Built-in Feedback	List Price
LINEAR ACTUATOR	G43	2-10 VDC	90 seconds	2-10 VDC	No Charge
	G53	0.5-10 VDC	90 seconds	0.5-10 VDC	No Charge
	W3M	0.02-5.00 seconds PWM	90 seconds	2-10 VDC	No Charge
	G13	Floating Point	90 seconds	2-10 VDC	No Charge
	G03	On/Off	90 seconds	2-10 VDC	No Charge

067001 - 04/13 - Subject to change. © Belimo Aircontrols (USA), Inc.

G7...-250 Series Flanged Globe Valve, Non-Spring Return Actuators

3-way Valve with Bronze Trim – ANSI 250 Flanged, Mixing

BELIMO

Valve Specifications

Service	chilled or hot water, 60% glycol
Flow characteristic	linear
Action	mixing: stem up - open B to AB
Sizes	2½", 3", 4", 5", 6"
End fitting	250 lb flanged
Materials:	
Body	iron
Seat	bronze
Stem	stainless steel
Packing	NLP
Plug	bronze
Media temp: Water	32°F to 350°F (0°C to 176°C)
Ambient temp	32°F to 122°F (0°C to 50°C)
Body pressure rating	ANSI 250
Maximum ΔP:	
Water	25 psi (172 kPa)
Rangeability	50:1
Leakage	Class III
Max water inlet	250 psi (1724 kPa) @ 350°F

5 YEAR WARRANTY

Non-Spring Return Actuators





ACTUATOR PART #					EVB24-3	EVB24-SR	EVX24-MFT	RVB24-3	RVX24-MFT
Control type					On/Off, Floating Point	Proportional	Proportional/MFT	On/Off, Floating Point	Proportional/MFT
Manual override					•	•	•	•	•
Running time					90 seconds	90 seconds	90 seconds	90 seconds	90 seconds
Noise level					65 dB(A)	65 dB(A)	65 dB(A)	65 dB(A)	65 dB(A)
ELECTRICAL CONNECTION:									
3 ft, cable, ½" conduit fitting					•	•	•	•	•
Globe Valve Model #	**Cv Rating**	**Valve Nominal Size Inches**	**Flanged Type**	**Close-Off ANSI III**					
G7...-250 3-WAY MIXING FLANGED GLOBE VALVE WITH NON-SPRING RETURN ACTUATORS									
G765-250	68	2½	ANSI 250	94	$3,251.00	$3,331.00	$3,381.00		
G780-250	91	3	ANSI 250	63	$3,706.00	$3,786.00	$3,836.00		
G7100-250	190	4	ANSI 250	33	$5,484.00	$5,564.00	$5,614.00		
G765-250	68	2½	ANSI 250	125				$4,435.00	$4,565.00
G780-250	91	3	ANSI 250	125				$4,510.00	$4,640.00
G7100-250	190	4	ANSI 250	68				$6,027.00	$6,157.00
G7125-250	280	5	ANSI 250	42				$8,921.00	$9,051.00
G7150-250	340	6	ANSI 250	28				$10,297.00	$10,427.00

MULTI-FUNCTION TECHNOLOGY

	PROGRAMMING CODES	Control Input	Running Time	Built-in Feedback	List Price
LINEAR ACTUATOR	G43	2-10 VDC	90 seconds	2-10 VDC	No Charge
	G53	0.5-10 VDC	90 seconds	0.5-10 VDC	No Charge
	W3M	0.02-5.00 seconds PWM	90 seconds	2-10 VDC	No Charge
	G13	Floating Point	90 seconds	2-10 VDC	No Charge
	G03	On/Off	90 seconds	2-10 VDC	No Charge

067001 - 04/13 - Subject to change. © Belimo Aircontrols (USA), Inc.

Valve Specifications

Service	chilled or hot water, 60% glycol
Flow characteristic	linear
Action	mixing: stem up - open B to AB
Sizes	2½", 3", 4"
End fitting	250 lb flanged
Materials:	
Body	iron
Seat	bronze
Stem	stainless steel
Packing	NLP
Plug	bronze
Media temp: Water	32°F to 350°F (0°C to 176°C)
Ambient temp	32°F to 122°F (0°C to 50°C)
Body pressure rating	ANSI 250
Maximum ΔP:	
Water	25 psi (172 kPa)
Rangeability	50:1
Leakage	Class III
Max water inlet	250 psi (1724 kPa) @ 350°

Visit *www.belimo.us* to see additional Spring Return options.

Spring Return Actuators





ACTUATOR PART #		AFBUP-X1	AFX24-MFT-X1	2*AFBUP-X1	2*AFX24-MFT-X1
Control type		On/Off	Proportional/MFT	On/Off	Proportional/MFT
Manual override		•	•	•	•
Running time	Motor	<75 seconds	150 seconds	<75 seconds	150 seconds
	Spring	<20 seconds	<20 seconds	<20 seconds	<20 seconds
Noise level		≤45 dB(A)	≤40 dB(A)	≤45 dB(A)	≤40 dB(A)
ELECTRICAL CONNECTION:					
3 ft, cable, ½" conduit fitting		•	•	•	•

Globe Valve Model #	C_V Rating	Valve Nominal Size Inches	Flanged Type	Close-Off ANSI III				
G7...-250 3-WAY MIXING FLANGED GLOBE VALVE WITH SPRING RETURN ACTUATORS								
G765-250	68	2½	ANSI 250	40	$3,161.00	$3,237.00		
G765-250	68	2½	ANSI 250	65			$3,845.00	$4,049.00
G780-250	91	3	ANSI 250	26	$3,634.00	$3,795.00		
G780-250	91	3	ANSI 250	43			$4,292.00	$4,627.00
G7100-250	190	4	ANSI 250	12				$5,109.00

MULTI-FUNCTION TECHNOLOGY

AF DESCRIPTION	PROGRAMMING CODES		Control Input	Running Time	Built-in Feedback	List Price
	P-10001	A01	2-10 VDC	150	2-10 VDC	No Charge
	P-10002	A02	0-10 VDC	150	0-10 VDC	No Charge
	P-10028	A28	0-10 VDC	100	0-10 VDC	No Charge
	P-10063	A63	0.5-4.5 VDC	150	0.5-4.5 VDC	No Charge
	P-10064	A64	5.5-10 VDC	150	5.5-10 VDC	No Charge
	P-20002	W02	0.02-5.00 seconds PWM	150	2-10 VDC	No Charge
	P-20003	W03	0.10-25.5 seconds PWM	150	2-10 VDC	No Charge
	P-30001	F01	Floating Point	150	2-10 VDC	No Charge
	P-40002	J02	On/Off	150	2-10 VDC	No Charge

Example: AFX24-MFT-X1 is the basic model. Add the P… pre-set MFT configuration number and list price to the actuator when ordering, as needed.
Most popular configurations available at no additional cost.
2* designates tandem.

067001 - 04/13 - Subject to change. © Belimo Aircontrols (USA), Inc.

G7...-250 Series Flanged Globe Valve, Electronic Fail-Safe Actuators

3-way Valve with Bronze Trim – ANSI 250 Flanged, Mixing

BELIMO

Valve Specifications

Service	chilled or hot water, 60% glycol
Flow characteristic	linear
Action	mixing: stem up - open B to AB
Sizes	2½", 3", 4", 5", 6"
End fitting	250 lb flanged
Materials:	
Body	iron
Seat	bronze
Stem	stainless steel
Packing	NLP
Plug	bronze
Media temp: Water	32°F to 350°F (0°C to 176°C)
Ambient temp	32°F to 122°F (0°C to 50°C)
Body pressure rating	ANSI 250
Maximum ΔP:	
Water	25 psi (172 kPa)
Rangeability	50:1
Leakage	Class III
Max water inlet	250 psi (1724 kPa) @ 350°F

5 YEAR WARRANTY

Electronic Fail-Safe Actuators





ACTUATOR PART #		AVKB24-3	AVKX24-MFT	2*GKX24-MFT-X1
Control type		On/Off, Floating Point	Proportional/MFT	Proportional/MFT
Manual override		•	•	•
Running time		90 seconds	90 seconds	150 seconds
Noise level	Motor	60 dB(A)	60 dB(A)	<45 dB(A)
	Spring	60 dB(A)	60 dB(A)	
ELECTRICAL CONNECTION:				
3 ft, cable, ½" conduit fitting		•	•	•

Globe Valve Model #	C_V Rating	Valve Nominal Size Inches	Flanged Type	Close-Off ANSI III			
G7...-250 3-WAY MIXING FLANGED GLOBE VALVE WITH ELECTRONIC FAIL-SAFE ACTUATORS							
G765-250	68	2½	ANSI 250	71	$3,327.00	$3,457.00	
G780-250	91	3	ANSI 250	47	$3,665.00	$3,795.00	
G765-250	68	2½	ANSI 250	222			$5,899.00
G780-250	91	3	ANSI 250	152			$6,475.00
G7100-250	190	4	ANSI 250	37			$7,961.00
G7125-250	280	5	ANSI 250	22			$10,854.00
G7150-250	340	6	ANSI 250	14			$12,230.00

MULTI-FUNCTION TECHNOLOGY

	PROGRAMMING CODES		Control Input	Running Time	Built-in Feedback	List Price
GK DESCRIPTION	P-10001	A01	2-10 VDC	150	2-10 VDC	No Charge
	P-10002	A02	0-10 VDC	150	0-10 VDC	No Charge
	P-10028	A28	0-10 VDC	100	0-10 VDC	No Charge
	P-10063	A63	0.5-4.5 VDC	150	0.5-4.5 VDC	No Charge
	P-10064	A64	5.5-10 VDC	150	5.5-10 VDC	No Charge
	P-20002	W02	0.02-5.00 seconds PWM	150	2-10 VDC	No Charge
	P-20003	W03	0.10-25.5 seconds PWM	150	2-10 VDC	No Charge
	P-30001	F01	Floating Point	150	2-10 VDC	No Charge
	P-40002	J02	On/Off	150	2-10 VDC	No Charge

Most popular configurations available at no additional cost.
2* designates tandem.

MULTI-FUNCTION TECHNOLOGY

	PROGRAMMING CODES	Control Input	Running Time	Built-in Feedback	List Price
LINEAR ACTUATOR	G43	2-10 VDC	90 seconds	2-10 VDC	No Charge
	G53	0.5-10 VDC	90 seconds	0.5-10 VDC	No Charge
	W3M	0.02-5.00 seconds PWM	90 seconds	2-10 VDC	No Charge
	G13	Floating Point	90 seconds	2-10 VDC	No Charge
	G03	On/Off	90 seconds	2-10 VDC	No Charge

067001 - 04/13 - Subject to change. © Belimo Aircontrols (USA), Inc.

Valve Specifications

Service	chilled or hot water, 60% glycol
Flow characteristic	linear
Action	mixing: stem up - open B to AB diverting: stem up - open AB to B
Sizes	2½", 3", 4", 5", 6"
End fitting	250 lb flanged
Materials:	
Body	iron
Seat	stainless steel
Stem	stainless steel
Packing	TFE V-ring
Plug	stainless steel
Media temp: Water	32°F to 350°F (0°C to 176°C)
Body pressure rating	ANSI 250
Maximum ΔP:	
Water	50 psi (340 kPa)
Rangeability	50:1
Leakage	Class III
Max water inlet	250 psi (1734 kPa) @ 350°F

5 YEAR WARRANTY

Non-Spring Return Actuators





ACTUATOR PART #					EVB24-3	EVB24-SR	EVX24-MFT	RVB24-3	RVX24-MFT
Control type					On/Off, Floating Point	Proportional	Proportional/MFT	On/Off, Floating Point	Proportional/MFT
Manual override					•	•	•	•	•
Running time					90 seconds	90 seconds	90 seconds	90 seconds	90 seconds
Noise level					65 dB(A)	65 dB(A)	65 dB(A)	65 dB(A)	65 dB(A)
ELECTRICAL CONNECTION:									
3 ft, cable, ½" conduit fitting					•	•	•	•	•
Globe Valve Model #	**C_V Rating**	**Valve Nominal Size Inches**	**Flanged Type**	**Close-Off ANSI III**					
G7...S-250 3-WAY MIXING FLANGED GLOBE VALVE WITH NON-SPRING RETURN ACTUATORS									
G765S-250	68	2½	ANSI 250	94	$3,470.00	$3,550.00	$3,600.00		
G780S-250	91	3	ANSI 250	63	$3,979.00	$4,059.00	$4,109.00		
G7100S-250	190	4	ANSI 250	33	$6,433.00	$6,513.00	$6,563.00		
G765S-250	68	2½	ANSI 250	185				$4,301.00	$4,431.00
G780S-250	91	3	ANSI 250	125				$4,801.00	$4,931.00
G7100S-250	190	4	ANSI 250	68				$6,963.00	$7,093.00
G7125S-250	280	5	ANSI 250	42				$10,106.00	$10,236.00
G7150S-250	340	6	ANSI 250	28				$10,499.00	$10,629.00
G7...DS-250 3-WAY DIVERTING FLANGED GLOBE VALVE WITH NON-SPRING RETURN ACTUATORS									
G765DS-250	68	2½	ANSI 250	140	$8,085.00	$8,165.00	$8,215.00		
G780DS-250	85	3	ANSI 250	140	$9,188.00	$9,268.00	$9,318.00		
G7100DS-250	154	4	ANSI 250	140	$10,402.00	$10,482.00	$10,532.00		
G7125DS-250	195	5	ANSI 250	140	$14,991.00	$15,071.00	$15,121.00		
G7150DS-250	248	6	ANSI 250	175	$18,355.00	$18,435.00	$18,485.00		

MULTI-FUNCTION TECHNOLOGY

	PROGRAMMING CODES	Control Input	Running Time	Built-in Feedback	List Price
LINEAR ACTUATOR	G43	2-10 VDC	90 seconds	2-10 VDC	No Charge
	G53	0.5-10 VDC	90 seconds	0.5-10 VDC	No Charge
	W3M	0.02-5.00 seconds PWM	90 seconds	2-10 VDC	No Charge
	G13	Floating Point	90 seconds	2-10 VDC	No Charge
	G03	On/Off	90 seconds	2-10 VDC	No Charge

067001 - 04/13 - Subject to change. © Belimo Aircontrols (USA), Inc.

G7...S(DS) -250 Series Flanged Globe Valve, Spring Return Actuators

3-way Valve with Stainless Steel Trim – ANSI 250 Flanged, Mixing and Diverting

BELIMO

Valve Specifications	
Service	chilled or hot water, 60% glycol
Flow characteristic	linear
Action	mixing: stem up - open B to AB diverting: stem up - open AB to B
Sizes	2½", 3", 4", 5", 6"
End fitting	250 lb flanged
Materials:	
Body	iron
Seat	stainless steel
Stem	stainless steel
Packing	TFE V-ring
Plug	stainless steel
Media temp:	
Water	
G7	32°F to 300°F (0°C to 149°C)
G7D (2½-5")	32°F to 300°F (0°C to 149°C)
G7D (6"-8")	32°F to 150°F (0°C to 65°C)
Body pressure rating	ANSI 250
Maximum ΔP: Water	50 psi (340 kPa)
Rangeability	50:1
Leakage	Class III
Max water inlet	250 psi (1724 kPa) @ 350°F

Visit *www.belimo.us* to see additional Spring Return options.

5 YEAR WARRANTY

Spring Return Actuators





ACTUATOR PART #		AFBUP-X1	AFX24-MFT-X1	2*AFBUP-X1	2*AFX24-MFT-X1
Control type		On/Off	Proportional/MFT	On/Off	Proportional/MFT
Manual override		•	•	•	•
Running time	Motor	<75 seconds	150 seconds	<75 seconds	150 seconds
	Spring	<20 seconds	<20 seconds	<20 seconds	<20 seconds
Noise level		≤45 dB(A)	≤40 dB(A)	≤45 dB(A)	≤40 dB(A)
ELECTRICAL CONNECTION:					
3 ft, cable, ½" conduit fitting		•	•	•	•

Globe Valve Model #	Cv Rating	Valve Nominal Size Inches	Flanged Type	Close-Off ANSI III				
G7...S-250 3-WAY MIXING FLANGED GLOBE VALVE WITH SPRING RETURN ACTUATORS								
G765S-250	68	2½	ANSI 250	40	$3,381.00	$3,547.00		
G765S-250	68	2½	ANSI 250	65			$4,016.00	$4,342.00
G780S-250	91	3	ANSI 250	26	$3,890.00	$3,824.00		
G780S-250	91	3	ANSI 250	43			$4,526.00	$4,627.00
G7100S-250	190	4	ANSI 250	12				$5,390.00
G7...DS-250 3-WAY DIVERTING FLANGED GLOBE VALVE WITH SPRING RETURN ACTUATORS								
G765DS-250	68	2½	ANSI 250	140	$8,006.00	$8,172.00		
G780DS-250	85	3	ANSI 250	140	$9,148.00	$9,298.00		
G7100DS-250	154	4	ANSI 250	140	$10,638.00	$10,813.00		
G7125DS-250	195	5	ANSI 250	140			$14,597.00	$14,928.00
G7150DS-250	248	6	ANSI 250	175			$18,901.00	$19,230.00

MULTI-FUNCTION TECHNOLOGY

AF DESCRIPTION	PROGRAMMING CODES		Control Input	Running Time	Built-in Feedback	List Price
	P-10001	A01	2-10 VDC	150	2-10 VDC	No Charge
	P-10002	A02	0-10 VDC	150	0-10 VDC	No Charge
	P-10028	A28	0-10 VDC	100	0-10 VDC	No Charge
	P-10063	A63	0.5-4.5 VDC	150	0.5-4.5 VDC	No Charge
	P-10064	A64	5.5-10 VDC	150	5.5-10 VDC	No Charge
	P-20002	W02	0.02-5.00 seconds PWM	150	2-10 VDC	No Charge
	P-20003	W03	0.10-25.5 seconds PWM	150	2-10 VDC	No Charge
	P-30001	F01	Floating Point	150	2-10 VDC	No Charge
	P-40002	J02	On/Off	150	2-10 VDC	No Charge

Example: AFX24-MFT-X1 is the basic model. Add the P... pre-set MFT configuration number and list price to the actuator when ordering, as needed.
Most popular configurations available at no additional cost.
2* designates tandem.

067001 - 04/13 - Subject to change. © Belimo Aircontrols (USA), Inc.

Valve Specifications

Service	chilled or hot water, 60% glycol
Flow characteristic	linear
Action	mixing: stem up - open B to AB diverting: stem up - open AB to B
Sizes	2½", 3", 4", 5", 6"
End fitting	250 lb flanged
Materials:	
Body	iron
Seat	stainless steel
Stem	stainless steel
Packing	TFE V-ring
Plug	stainless steel
Media temp:	
Water	
G7	32°F to 300°F (0°C to 149°C)
G7DS (2½-5")	32°F to 300°F (0°C to 149°C)
G7DS (6"-8")	32°F to 150°F (0°C to 65°C)
Body pressure rating	ANSI 250
Maximum ΔP:	
Water	50 psi (340 kPa)
Rangeability	50:1
Leakage	Class III
Max water inlet	250 psi (1734 kPa) @ 350°F

5 YEAR WARRANTY

Electronic Fail-Safe Actuators





ACTUATOR PART #		AVKB24-3	AVKX24-MFT	2*GKX24-MFT-X1
Control type		On/Off, Floating Point	Proportional/MFT	Proportional/MFT
Manual override		•	•	•
Running time	Motor	90 seconds	90 seconds	150 seconds
	Fail-Safe	35 seconds	35 seconds	35 seconds
Noise level	Motor	60 dB(A)	60 dB(A)	<45 dB(A)
	Fail-Safe	60 dB(A)	60 dB(A)	
ELECTRICAL CONNECTION:				
3 ft, cable, ½" conduit fitting		•	•	•

Globe Valve Model #	C_V Rating	Valve Nominal Size Inches	Flanged Type	Close-Off ANSI III			
G7...S-250 3-WAY MIXING FLANGED GLOBE VALVE WITH ELECTRONIC FAIL-SAFE ACTUATORS							
G765S-250	68	2½	ANSI 250	71	$3,417.00	$3,547.00	
G780S-250	91	3	ANSI 250	47	$3,694.00	$3,824.00	
G765S-250	68	2½	ANSI 250	222			$5,895.00
G780S-250	91	3	ANSI 250	152			$6,365.00
G7100S-250	190	4	ANSI 250	37			$8,510.00
G7...DS-250 3-WAY DIVERTING FLANGED GLOBE VALVE WITH ELECTRONIC FAIL-SAFE ACTUATORS							
G765DS-250	68	2½	ANSI 250	140	$8,042.00	$8,172.00	
G780DS-250	85	3	ANSI 250	140	$9,168.00	$9,298.00	
G7100DS-250	154	4	ANSI 250	140	$10,368.00	$10,498.00	
G7125DS-250	195	5	ANSI 250	140	$14,363.00	$14,493.00	
G7150DS-250	248	6	ANSI 250	175	$18,540.00	$18,670.00	

MULTI-FUNCTION TECHNOLOGY

	PROGRAMMING CODES		Control Input	Running Time	Built-in Feedback	List Price
GK DESCRIPTION	P-10001	A01	2-10 VDC	150	2-10 VDC	No Charge
	P-10002	A02	0-10 VDC	150	0-10 VDC	No Charge
	P-10028	A28	0-10 VDC	100	0-10 VDC	No Charge
	P-10063	A63	0.5-4.5 VDC	150	0.5-4.5 VDC	No Charge
	P-10064	A64	5.5-10 VDC	150	5.5-10 VDC	No Charge
	P-20002	W02	0.02-5.00 seconds PWM	150	2-10 VDC	No Charge
	P-20003	W03	0.10-25.5 seconds PWM	150	2-10 VDC	No Charge
	P-30001	F01	Floating Point	150	2-10 VDC	No Charge
	P-40002	J02	On/Off	150	2-10 VDC	No Charge

Most popular configurations available at no additional cost.
2* designates tandem.

MULTI-FUNCTION TECHNOLOGY

	PROGRAMMING CODES	Control Input	Running Time	Built-in Feedback	List Price
LINEAR ACTUATOR	G43	2-10 VDC	90 seconds	2-10 VDC	No Charge
	G53	0.5-10 VDC	90 seconds	0.5-10 VDC	No Charge
	W3M	0.02-5.00 seconds PWM	90 seconds	2-10 VDC	No Charge
	G13	Floating Point	90 seconds	2-10 VDC	No Charge
	G03	On/Off	90 seconds	2-10 VDC	No Charge

067001 - 04/13 - Subject to change. © Belimo Aircontrols (USA), Inc.

Valve Accessories

Globe Valves

BELIMO

5 YEAR WARRANTY

		Non-Spring Return				Spring Return			Electronic Fail-Safe	
WEATHERSHIELDS		**LV**	**SV**	**EV**	**RV**	**LF**	**NF**	**AF**	**GK**	**List Price**
	**ZS-SPGV-60** LF series on G2/G3 globe valve					•				$368.00
	ZS-SPGV-10 Dual AF series on flanged globe valve							•		$384.00
	ZS-SPGV-20 Single NF/AF series on G2/G3 (NF/AF) and flanged globe valve (AF)						•	•		$384.00
	ZS-SPGV-40 GK series on flanged globe valve								•	$384.00
	ZS-SPGV-50 GK series on flanged globe valve								•	$384.00
AUXILIARY SWITCHES & POTENTIOMETERS										
	**S1A** Auxiliary switch - 1x SPDT, 3A (0.5A inductive) @ 250 VAC								•	$84.00
	S2A Auxiliary switch - 2x SPDT, 3A (0.5A inductive) @ 250 VAC								•	$125.00
	P140A GR Feedback potentiometer 140 Ω								•	$138.00
	P500A GR Feedback potentiometer 500 Ω								•	$138.00
	P1000A GR Feedback potentiometer 1000 Ω								•	$138.00
	P2800A GR Feedback potentiometer 2800 Ω								•	$138.00
	P5000A GR Feedback potentiometer 5000 Ω								•	$138.00
	P10000A GR Feedback potentiometer 10000 Ω								•	$138.00
BATTERY BACKUPS										
	NSV24 US Battery backup module	•	•	•	•					$783.00
	**NSV-BAT** 12VDC 1.2 AH battery (2 required)	•	•	•	•					$119.00

Note: Each NSV-24 US requires 2 NSV-BAT.

067001 - 04/13 - Subject to change. © Belimo Aircontrols (USA), Inc.

15 BUTTERFLY VALVES

STANDARD- HD AND HDU SERIES
GROOVED- VIC SERIES
HIGH PERFORMANCE- SHP SERIES

- Standard, grooved end, and high performance butterfly valves to meet the wide range of commercial and industrial HVAC applications.
- Advanced seat and disc design(s) provide a bubble tight shutoff capability at each valve's rated temperature/pressure while maintaining a low seating torque.
- Belimo standard and industrial NEMA 4X actuators to ensure control in a variety of environments.
- Standard performance HD/HDU series incorporates a five bushing design to isolate the valve shaft from the body that results in better control.
- Stainless steel disc and shaft are standard for superior strength, durability and long lasting operation.

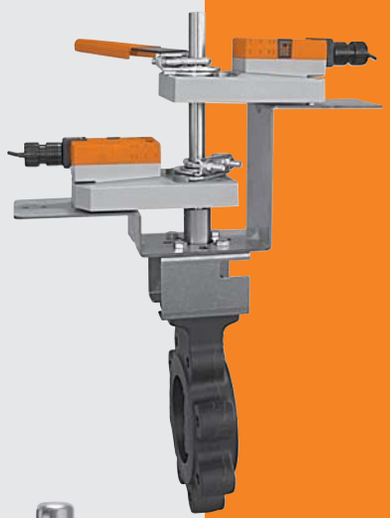

Applications

The comprehensive line of butterfly valves is available in sizes 2" to 30" and fullfills the requirement of commercial and industrial HVAC applications requiring positive shut-off for liquids. Applications include chiller isolation, cooling tower isolation, change-over systems, large air handler coil control and bypass including related process control.





Butterfly Valve Nomenclature

F6	50	HD	SY2	24	-MFT	
Valve F6 = 2-way F7 = 3-way	**Valve Size** 50 = 2” 65 = 2½” 80 = 3” 100 = 4” 125 = 5” 150 = 6” 200 = 8” 250 = 10” 300 = 12” 350 = 14” 400 = 16” 450 = 18” 500 = 20” 600 = 24” 750 = 30”	**Trim Material** **HDU** = Stainless Disc, Cast Ductile Iron Full Lug Body, EPDM Liner, Bubble Tight Close-Off to 50 psi **HD** = Stainless Disc, Cast Ductile Iron Full Lug Body, EPDM Liner, Bubble Tight Close-Off to 200 psi (2” to 12”), 150 psi (14”+) **-150SHP** = ANSI Class 150, Stainless Disc, Cast Steel Full Lug Body, RPTFE Seat, Bubble Tight Close-off up to 285 psi **-300SHP** = ANSI Class 150, Stainless Disc, Cast Steel Full Lug Body, RPTFE Seat, Bubble Tight Close-off up to 600 psi **-VIC** = Ductile Iron Grooved End Body, Nickel Coated Ductile Iron Disc, Bubble Tight Close-Off up to 300 psi	**Actuator Type** Non-Spring Return ARB(X)... GRB(X)... DR... N4 GR/GM... N4 GMB(X) SY… Electronic Fail-Safe GK... DKR...N4 Spring Return AF…	**Power Supply** -24 = 24 VAC/DC -110 = 110/120 VAC -120 = 120 VAC -230 = 230 VAC UP = 24-240 VAC or 24-125 VDC	**Control** Blank = On/Off -3-X1 =On/Off, Floating Point MFT or MFT-X1 = Multi-Function Technology	-S = Built-in Auxiliary Switch

Ordering Example

1. Choose the valve actuator combination.
   F650HD+SY2-24MFT
2. Specify preference or configuration.
3. **For MFT orders only - select programming code (consult factory)**
   +NO **+Tagging (if needed)**
4. Does order require tagging?
5. Complete Ordering Example:
   F650HD+SY2-24MFT+NO +ACE
   Consult factory

2-way Preference

Non-Spring Return	2 Pos.		Set Up Required Field Logic Determines Normal Position
	Modulating	NC	(Normally Closed) 1 VDC/2 VDC/4mA = Closed
		NO	(Normally Open) 1 VDC/2 VDC/4mA = Open
Spring Return		NO/FO	(Normally Open/Fail Open) Field Logic Determines Normal Position Spring Fails Valve OPEN
		NC/FC	(Normally Closed/Fail Closed) Field Logic Determines Normal Position Spring Fails Valve CLOSED
		NO/FO	(Normally Open/Fail Open) 1 VDC/2 VDC/4mA = Open Spring Fails Valve OPEN
		NO/FC	(Normally Open/Fail Closed) 1 VDC/2 VDC/4mA = Open Spring Fails Valve CLOSED
		NC/FO	(Normally Closed/Fail Open) 1 VDC/2 VDC/4mA = Closed Spring Fails Valve OPEN
		NC/FC	(Normally Closed/Fail Closed) 1 VDC/2 VDC/4mA = Closed Spring Fails Valve CLOSED

Set-Up **3-way Configuration**

Non-Spring Return	2 Pos.	Specify Flow Pattern [see pg.15-4, 15-5]	No Set Up Required Field Logic Determines Normal Position
	Modulating		Master (Actuated) Valve NC (Normally Closed) 1 VDC/2 VDC/4mA = Closed
			Master (Actuated) Valve NO (Normally Open) 1 VDC/2 VDC/4mA = Open
Spring Return	Modulating 2 Pos.	Specify Flow Pattern [see pg. 15-4, 15-5]	NO/FO (Normally Open/Fail Open) Field Logic Determines Normal Position Spring Fails Master Valve OPEN
			NC/FC (Normally Closed/Fail Closed) Field Logic Determines Normal Position Spring Fails Master Valve CLOSED
			NO/FO (Normally Open/Fail Open) 1 VDC/2 VDC/4mA = Master Valve Open Spring Fails Master Valve OPEN
			NO/FC (Normally Open/Fail Closed) 1 VDC/2 VDC/4mA = Maser Valve Open Spring Fails Master Valve CLOSED
			NC/FO (Normally Closed/Fail Open) 1 VDC/2 VDC/4mA = Master Valve Closed Spring Fails Master Valve OPEN
			NC/FC (Normally Closed/Fail Closed) 1 VDC/2 VDC/4mA = Master Valve Closed Spring Fails Master Valve CLOSED

Tagging:
Valves may be tagged per customer specification. ($10.00 per tag)

Example:
Chiller 1
3rd Floor East

Part number for tagging: 99981-00101

Control Valve Product Range

Butterfly Valve Product Range
F6.., F7..

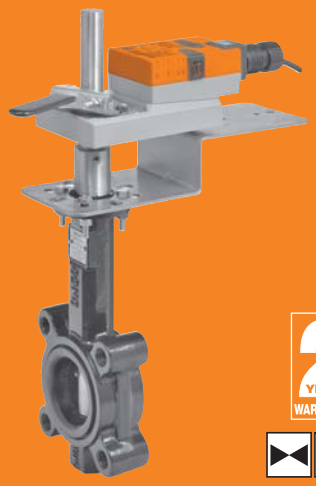

2-way					Suitable Actuators											
		Valve Nominal Size		Type	Non-Spring Return						Spring Return		Electronic Fail-Safe			
C_V 90°	C_V 60°	IN	DN [mm]	2-way	HDU	HD	HDU	HD	HDU	HD	HDU	HD	HDU	HD	HDU	HD
115	44	2”	50	F650HD(U)	AM / AR	AM / AR										
196	75	2½”	65	F665HD(U)												
302	116	3”	80	F680HD(U)				GM /GR								GK
600	230	4”	100	F6100HD(U)		DR	GM /GR				AF Series	AF Series		DKR	GK Series	
1022	392	5”	125	F6125HD(U)												
1579	605	6”	150	F6150HD(U)	DR								DKR			
3136	1202	8”	200	F6200HD(U)					SY Series	SY Series						
5340	2047	10”	250	F6250HD(U)												
8250	3162	12”	300	F6300HD(U)												
11917	4568	14”	350	F6350HD												
16388	6282	16”	400	F6400HD												
21705	8320	18”	450	F6450HD												
27908	10698	20”	500	F6500HD												
43116	16528	24”	600	F6600HD												
73426	28146	30”	750	F6750HD												

3-way					Suitable Actuators									
		Valve Nominal Size		Type	Non-Spring Return						Spring Return		Electronic Fail-Safe	
C_V 90°	C_V 60°	IN	DN [mm]	3-way	HDU	HD	HDU	HD	HDU	HD	HDU	HD	HDU	HD
115	44	2”	50	F750HD(U)	AM	AM								
196	75	2½”	65	F765HD(U)				GM Series						GK
302	116	3”	80	F780HD(U)					GM Series					
600	230	4”	100	F7100HD(U)							AF Series	AF Series		
1022	392	5”	125	F7125HD(U)										
1579	605	6”	150	F7150HD(U)					SY Series				GK Series	
3136	1202	8”	200	F7200HD(U)						SY Series				
5340	2047	10”	250	F7250HD(U)										
8250	3162	12”	300	F7300HD(U)										
11917	4568	14”	350	F7350HD										
16388	6282	16”	400	F7400HD										
21705	8320	18”	450	F7450HD										
27908	10698	20”	500	F7500HD										
43116	16528	24”	600	F7600HD										

Mode of Operation
Butterfly valves allow higher flows with relatively low pressure loss from the valves, and are typically used for isolation or flow control for valve openings between 30 to 70 degrees of full open. At valve openings greater than 70 degrees, the pressure loss of a butterfly valve is too low to produce any significant effect on flow or the energy loss of a flow system. Butterfly valves can be controlled with a maintenance-free electronic actuator or manually with an ergonomic, handle or gear operator.

Product Features
The unique disc and seat design ensures positive valve seating while maintaining low seating torque.

Actuator Specifications

Control type	on/off, floating point, proportional, 2-10 VDC multi-function technology (MFT)
Manual override	all models
Electrical connection	3 ft [1m] cable with two ½” conduit fittings with internal terminal block (SY)

Valve Specifications

Service	chilled, hot water, 60% glycol
Flow characteristic	F6 modified equal percentage F7 modified linear
Controllable flow range	82°
Sizes	2” to 30”
End fitting	ANSI Class 125/150 flanged
Materials	
Body	ductile iron ASTM A536
Body finish	epoxy powder coat
Disc	304 stainless steel
Shaft	416 stainless steel
Seat	EPDM standard
O-rings	EPDM
Bushings	RPTFE
Media temp range	-22°F to 248°F (-30°C to 120°C)
Body pressure rating	ASME/ANSI Class 125
Close-off pressure	HDU: 50 psi HD: 200 psi, 2” to 12” 150 psi, 14” to 30”
Rangeability	10:1 (for 30° to 70° range)
Maximum velocity	12 FPS
Leakage	bubble tight shut-off

067001 - 04/13 - Subject to change. © Belimo Aircontrols (USA), Inc.

Control Valve Product Range

Butterfly Valve Product Range
F6.., F7..

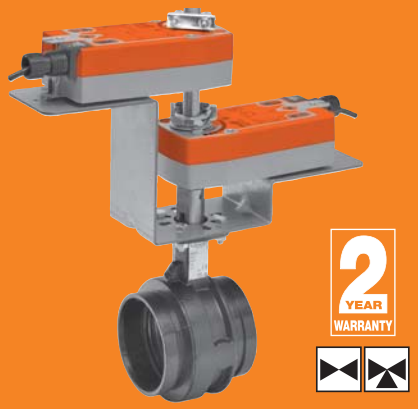

		2-way			Suitable Actuators			
		Valve Nominal Size		Type	Non-Spring Return			Spring Return	Electronic Fail-Safe
C_V 90°	C_V 60°	IN	DN [mm]	2-way					
115	36	2”	50	F650VIC	AM Series	GM Series	SY Series	AF Series	GK
260	80	2½”	65	F665VIC					
440	140	3”	80	F680VIC					
820	250	4”	100	F6100VIC					
1200	370	5”	125	F6125VIC					
1800	560	6”	150	F6150VIC					
3400	1050	8”	200	F6200VIC					
5800	1800	10”	250	F6250VIC					
9000	2790	12”	300	F6300VIC					

		3-way			Suitable Actuators			
		Valve Nominal Size		Type	Non-Spring Return			Spring Return
C_V 90°	C_V 60°	IN	DN [mm]	3-way				
115	36	2”	50	F750VIC	AM	GM Series	SY Series	AF Series
260	80	2½”	65	F765VIC				
440	140	3”	80	F780VIC				
820	250	4”	100	F7100VIC				
1200	370	5”	125	F7125VIC				
1800	560	6”	150	F7150VIC				
3400	1050	8”	200	F7200VIC				
5800	1800	10”	250	F7250VIC				
9000	2790	12”	300	F7300VIC				

Mode of Operation
Butterfly valves allow higher flows with relatively low pressure loss from the valves, and are typically used for isolation or flow control for valve openings between 30 to 70 degrees of full open. At valve openings greater than 70 degrees, the pressure loss of a butterfly valve is too low to produce any significant effect on flow or the energy loss of a flow system. Butterfly valves can be controlled with a maintenance-free electronic actuator or manually with an ergonomic, handle or gear operator.

Product Features
The unique single offset disc and seat design ensures positive valve seating while maintaining low seating torque.

Actuator Specifications

Control type	on/off, floating point, proportional, 2-10 VDC multi-function technology (MFT)
Manual override	all models
Electrical connection	3 ft [1m] cable with two ½” conduit fittings with internal terminal block (SY)

Valve Specifications

Service	chilled, hot water, 60% glycol
Flow characteristic	F6 modified equal percentage F7 modified linear
Sizes	2” to 12”
End fitting	grooved ANSI/AWWA (C606)
Materials*	
Body	ductile iron ASTM A536, grade 65-45-12
Body finish	black alkyd enamel
Disc	electrolysis nickel coated ductile iron
Shaft	416 stainless steel
Seat	EPDM
Bearings	fiberglass with TFE lining
Media temp range	-20°F to 250°F (-30°C to 121°C)
Body pressure rating	300 psi
Close-off pressure	200 psi
Rangeability	100:1 (for 30° to 70° range)
Maximum velocity	20 FPS
Leakage	bubble tight shut-off

*VIC® 300 Masterseal™ as manufactured by Victaulic Company

067001 - 04/13 - Subject to change. © Belimo Aircontrols (USA), Inc.

Control Valve Product Range

Butterfly Valve Product Range
F6.., F7..



		2-way Valves			Suitable Actuators							
		Valve Nominal Size	Type		Non-Spring Return				Spring Return		Electronic Fail-Safe	
C_V 90°	C_V 60°	Inches	ANSI 150 2-way	ANSI 300 2-way	150	300	150	300	150	300	150	300
102	56	2”	F650-150SHP	F650-300SHP	GM Series	GM Series	SY Series	SY Series	AF Series	AF Series	GK Series	GK Series
146	80	2½”	F665-150SHP	F665-300SHP								
228	125	3”	F680-150SHP	F680-300SHP								
451	248	4”	F6100-150SHP	F6100-300SHP								
714	392	5”	F6125-150SHP	F6125-300SHP								
1103	607	6”	F6150-150SHP	F6150-300SHP								
2064	1135	8”	F6200-150SHP	F6200-300SHP								
3517	1934	10”	F6250-150SHP	F6250-300SHP								
4837	2660	12”	F6300-150SHP	F6300-300SHP								
6857	3592	14”	F6350-150SHP	F6350-300SHP								
9287	4865	16”	F6400-150SHP	F6400-300SHP								
11400	6270	18”	F6450-150SHP	F6450-300SHP								
14420	7590	20”	F6500-150SHP	F6500-300SHP								
22050	11550	24”	F6600-150SHP	F6600-300SHP								
34388	18012	30”	F6750-150SHP	n/a								

Note: C_V values listed for ANSI Class 150 Butterfly Valves. Please consult the technical documentation for ANSI Class 300 C_V values and configurations.

		3-way Valves			Suitable Actuators					
		Valve Nominal Size	Type		Non-Spring Return				Electronic Fail-Safe	
C_V 90°	C_V 60°	Inches	ANSI 150 3-way	ANSI 300 3-way	150	300	150	300	150	300
102	56	2”	F750-150SHP	F750-300SHP	GM Series	GM Series	SY Series	SY Series	GK Series	GK Series
146	80	2½”	F765-150SHP	F765-300SHP						
228	125	3”	F780-150SHP	F780-300SHP						
451	248	4”	F7100-150SHP	F7100-300SHP						
714	392	5”	F7125-150SHP	F7125-300SHP						
1103	607	6”	F7150-150SHP	F7150-300SHP						
2064	1135	8”	F7200-150SHP	F7200-300SHP						
3517	1934	10”	F7250-150SHP	F7250-300SHP						
4837	2660	12”	F7300-150SHP	F7300-300SHP						
6857	3592	14”	F7350-150SHP	F7350-300SHP						
9287	4865	16”	F7400-150SHP	F7400-300SHP						
11500	3270	18”	F7450-150SHP	F7450-300SHP						
14420	7590	20”	F7500-150SHP	F7500-300SHP						
22050	11550	24”	F7600-150SHP	F7600-300SHP						

Note: C_V values listed for ANSI Class 150 Butterfly Valves. Please consult the technical documentation for ANSI Class 300 C_V values and configurations.

Mode of Operation
Butterfly valves allow higher flows with relatively low pressure loss from the valves, and are typically used for isolation or flow control for valve openings between 30 to 70 degrees of full open. At valve openings greater than 70 degrees, the pressure loss of a butterfly valve is too low to produce any significant effect on flow or the energy loss of a flow system. Butterfly valves can be controlled with a maintenance-free electronic actuator or manually with an ergonomic, handle or gear operator.

Product Features
Unique body seat and double offset disc design ensures positive valve sealing to help assure leak free performance in water applications while maintaining low seating torque.

Actuator Specifications

Control type	on/off, floating point, proportional, 2-10 VDC multi-function technology (MFT)
Manual override	all models
Electrical connection	3 ft [1m] cable with two ½” conduit fittings with internal terminal block (SY)

Valve Specifications

Service	chilled or hot water, 60% glycol, steam to 50 psi
Flow characteristic	F6 modified equal percentage, unidirectional F7 modified linear, unidirectional
Sizes	2” to 30”
End fitting	ANSI Class 150 or 300 according to the valve
Materials	
Body	carbon steel full lug
Disc	316 stainless steel
Shaft	17-4 PH stainless
Seat	RTFE
Gland seal	TFE
Bearings	glass backed PTFE
Media temp range	-20°F to +400°F (-30°C to +204°C)
Body pressure rating	150 SHP: ASME/ANSI Class 150 300 SHP: ASME/ANSI Class 300
Close-off pressure	150: 285 psi, 300: 740 psi
Rangeability	100:1 (for 30° to 70° range)
Maximum velocity	32 FPS
Leakage	bubble tight shut-off

067001 - 04/13 - Subject to change. © Belimo Aircontrols (USA), Inc.

D163_12

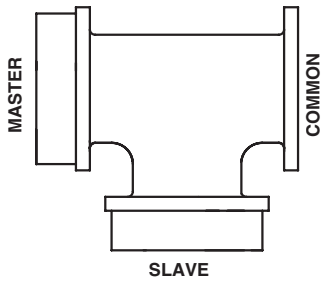

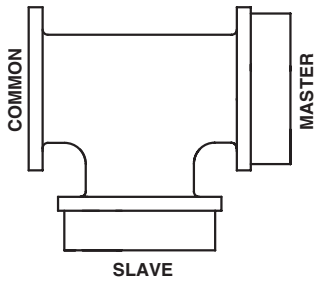

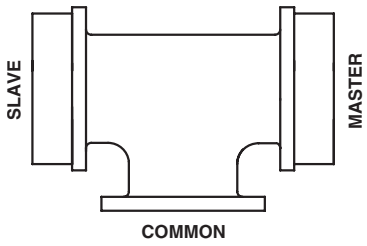

CONFIG CODE	ON/OFF OR MOD@2VDC MASTER VALVE IS	MASTER VALVE @ FAIL
X10	OPEN	FAIL IN PLACE
X11	OPEN	OPEN
X12	OPEN	CLOSED
X13	CLOSED	FAIL IN PLACE
X14	CLOSED	OPEN
X15	CLOSED	CLOSED

CONFIG CODE	ON/OFF OR MOD@2VDC MASTER VALVE IS	MASTER VALVE @ FAIL
X20	OPEN	FAIL IN PLACE
X21	OPEN	OPEN
X22	OPEN	CLOSED
X23	CLOSED	FAIL IN PLACE
X24	CLOSED	OPEN
X25	CLOSED	CLOSED

CONFIG CODE	ON/OFF OR MOD@2VDC MASTER VALVE IS	MASTER VALVE @ FAIL
X30	OPEN	FAIL IN PLACE
X31	OPEN	OPEN
X32	OPEN	CLOSED
X33	CLOSED	FAIL IN PLACE
X34	CLOSED	OPEN
X35	CLOSED	CLOSED

X Specifies Bi-Directional Flow Capability

Notes:

1. Slave Valve operates inversely of the Master Valve.
2. The Master Valve is always located on the run.
3. The Slave Valve may also have an actuator if required (Direct Coupled).
4. On/Off actuator normal position is a function of field logic.
5. Proportional actuator normal position is a function of the CCW/CW switch.
6. All 3-way assemblies are designed for 90 degree actuator rotation.

067001 - 04/13 - Subject to change. © Belimo Aircontrols (USA), Inc.

SHP Series Valves are Flow Direction Specific.

D145

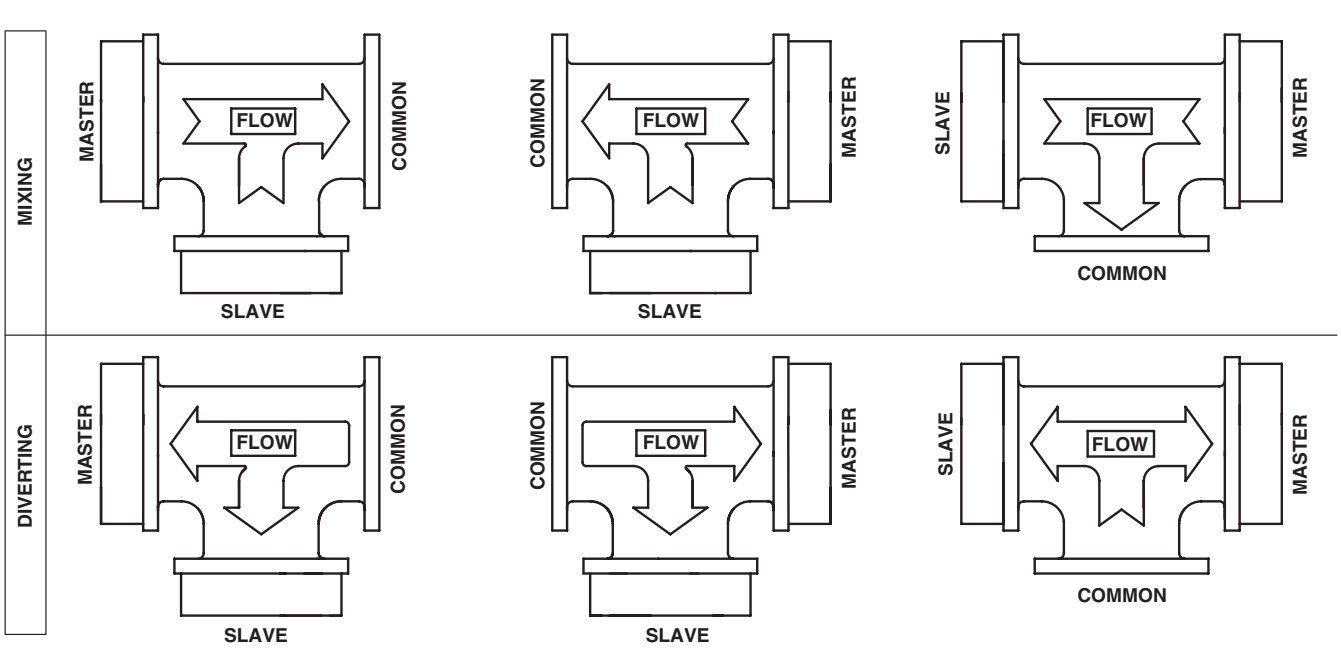

CONFIG CODE	ON/OFF OR MOD@2VDC MASTER VALVE IS	MASTER VALVE @ FAIL
M(D)10	OPEN	FAIL IN PLACE
M(D)11	OPEN	OPEN
M(D)12	OPEN	CLOSED
M(D)13	CLOSED	FAIL IN PLACE
M(D)14	CLOSED	OPEN
M(D)15	CLOSED	CLOSED

CONFIG CODE	ON/OFF OR MOD@2VDC MASTER VALVE IS	MASTER VALVE @ FAIL
M(D)20	OPEN	FAIL IN PLACE
M(D)21	OPEN	OPEN
M(D)22	OPEN	CLOSED
M(D)23	CLOSED	FAIL IN PLACE
M(D)24	CLOSED	OPEN
M(D)25	CLOSED	CLOSED

CONFIG CODE	ON/OFF OR MOD@2VDC MASTER VALVE IS	MASTER VALVE @ FAIL
M(D)30	OPEN	FAIL IN PLACE
M(D)31	OPEN	OPEN
M(D)32	OPEN	CLOSED
M(D)33	CLOSED	FAIL IN PLACE
M(D)34	CLOSED	OPEN
M(D)35	CLOSED	CLOSED

M Specifies MIXING, D Specifies DIVERTING

Notes:

1. Slave Valve operates inversely of the Master Valve.
2. The Master Valve is always located on the run.
3. The Slave Valve may also have an actuator if required (Direct Coupled).
4. On/Off actuator normal position is a function of field logic.
5. Proportional actuator normal position is a function of the CCW/CW switch.
6. All 3-way assemblies are designed for 90 degree actuator rotation.

067001 - 04/13 - Subject to change. © Belimo Aircontrols (USA), Inc.

BELIMO

This Page
Intentionally Left Blank

O67001- 04/13 - Subject to change. © Belimo Aircontrols (USA), Inc.

HD/HDU Flow in Std Weight Pipe (Fluid Velocity in GPM). Use with HD/HDU Series Butterfly Valves.

SIZE	2 FPS	4 FPS	6 FPS	8 FPS	10 FPS	12 FPS	14 FPS ✕	16 FPS ✕
2”	19	39	59	78	98	117	137	157
2½”	30	61	92	122	153	184	214	245
3”	44	88	132	176	220	264	308	353
4”	78	157	235	313	392	470	548	627
5”	122	245	367	490	612	734	857	979
6”	176	352	529	705	881	1058	1234	1410
8”	313	627	940	1253	1567	1880	2193	2507
10”	490	979	1469	1958	2448	2738	3427	3917
12”	705	1410	2115	2820	3525	4230	4935	5640
14”	959	1919	2879	3838	4798	5758	6717	7677
16”	1253	2507	3760	5013	6267	7520	8774	10027
18”	1586	3173	4759	6345	7931	9518	11104	12690
20”	1958	3917	5875	7834	9792	11750	13709	15668
24”	2820	5640	8460	11280	14100	16921	19741	22561
30”	4406	8813	13220	17625	22032	26438	30845	35251

It is not recommended to exceed 12 feet per second through resilient seat butterfly valves.
Velocities greater than 12 fps may damage the valve liner and disc.
The torque may increase, potentially exceeding the actuators capacity. Applies to on/off and modulating service.

VIC Flow in Std Weight Pipe (Fluid Velocity in GPM). Use with Grooved Series Butterfly Valves.

SIZE	1 FPS	3 FPS	5 FPS	8 FPS	10 FPS	12 FPS	15 FPS	16 FPS	20 FPS
2”	10	31	52	84	105	126	157	167	209
2½”	15	45	75	119	149	179	224	239	298
3”	23	69	115	184	230	277	346	369	461
4”	40	119	198	317	397	476	595	635	794
5”	62	187	312	499	624	748	935	998	1247
6”	90	270	450	720	900	1081	1351	1441	1801
8”	156	468	780	1247	1559	1871	2339	2495	3119
10”	246	737	1229	1966	2458	2949	3687	3932	4916
12”	353	1058	1763	2820	3525	4230	5288	5640	7050

SHP Flow in Std Weight Pipe (Fluid Velocity in GPM). Use with SHP Series Butterfly Valves.

SIZE	4 FPS	8 FPS	12 FPS	16 FPS	20 FPS	24 FPS	28 FPS	32 FPS	36 FPS ✕
2”	39	78	118	157	196	235	274	313	353
2½”	61	122	184	245	306	367	428	490	551
3”	88	176	264	353	441	529	617	705	793
4”	157	313	470	627	783	940	1097	1253	1410
5”	245	490	734	979	1224	1469	1714	1958	2203
6”	352	705	1058	1410	1763	2115	2468	2820	3173
8”	627	1253	1880	2507	3133	3760	4387	5013	5640
10”	979	1958	2938	3917	4896	5875	6854	7834	8813
12”	1410	2820	4230	5640	7050	8460	9870	11280	12690
14”	1919	3838	5738	7677	9596	11515	13435	15354	17273
16”	2507	5013	7520	10027	12534	15040	17547	20054	22561
18”	3173	6345	9518	12690	15863	19036	22208	25381	28553
20”	3917	7834	11750	15667	19584	23501	27418	31334	35251
24”	5640	11280	16921	22561	28201	33841	39481	45121	50762
30”	8813	17625	26438	35251	44064	52877	61689	70502	79315

It is not recommended to exceed 32 feet per second through high performance butterfly valves. Velocities greater than 32 fps may damage the valve.

067001 - 04/13 - Subject to change. © Belimo Aircontrols (USA), Inc.

BELIMO

2 YEAR WARRANTY

SY Series Actuators

					CONTROL TYPE				
SERIES	MODEL	Run Time(s) 90°@60Hz	Power Supply	Duty Cycle	Proportional	3 Point	On/Off	Feedback	List Price
SY1	SY1-110	12 seconds	120 VAC ±10%, 50/60 Hz	30%		•	•	none, opt 1k	$1,316.00
	SY1-24	15 seconds	24 VAC ±10%, 50/60 Hz	30%		•	•	none, opt 1k	$1,316.00
	SY1-220	12 seconds	230 VAC ±10%, 50/60 Hz	30%		•	•	none, opt 1k	$1,316.00
	SY1-110P	13 seconds	120 VAC ±10%, 50/60 Hz	75%	•			2-10 VDC/4-20 mA	$3,099.00
	SY1-24P	15 seconds	24 VAC ±10%, 50/60 Hz	75%	•			2-10 VDC/4-20 mA	$3,099.00
	SY1-220P	13 seconds	230 VAC ±10%, 50/60 Hz	75%	•			2-10 VDC/4-20 mA	$3,099.00
SY2	SY2-110	15 seconds	120 VAC ±10%, 50/60 Hz	30%		•	•	none, opt 1k	$2,161.00
	SY2-24	15 seconds	24 VAC ±10%, 50/60 Hz	30%		•	•	none, opt 1k	$2,161.00
	SY2-220	15 seconds	230 VAC ±10%, 50/60 Hz	30%		•	•	none, opt 1k	$2,161.00
	SY2-120MFT	17 seconds	120 VAC ±10%, 50/60 Hz	75%	•			2-10 VDC/4-20 mA	$4,405.00
	SY2-24MFT	15 seconds	24 VAC ±10%, 50/60 Hz	75%	•			2-10 VDC/4-20 mA	$4,405.00
	SY2-230MFT	17 seconds	230 VAC ±10%, 50/60 Hz	75%	•			2-10 VDC/4-20 mA	$4,405.00
SY3	SY3-110	22 seconds	120 VAC ±10%, 50/60 Hz	30%		•	•	none, opt 1k	$2,463.00
	SY3-24	22 seconds	24 VAC ±10%, 50/60 Hz	30%		•	•	none, opt 1k	$2,463.00
	SY3-220	22 seconds	230 VAC ±10%, 50/60 Hz	30%		•	•	none, opt 1k	$2,463.00
	SY3-24MFT	22 seconds	24 VAC ±10%, 50/60 Hz	75%	•			2-10 VDC/4-20 mA	$4,718.00
	SY3-120MFT	26 seconds	120 VAC ±10%, 50/60 Hz	75%	•			2-10 VDC/4-20 mA	$4,718.00
	SY3-230MFT	26 seconds	230 VAC ±10%, 50/60 Hz	75%	•			2-10 VDC/4-20 mA	$4,718.00
SY4	SY4-110	16 seconds	120 VAC ±10%, 50/60 Hz	30%		•	•	none, opt 1k	$3,113.00
	SY4-24	16 seconds	24 VAC ±10%, 50/60 Hz	30%		•	•	none, opt 1k	$3,113.00
	SY4-220	16 seconds	230 VAC ±10%, 50/60 Hz	30%		•	•	none, opt 1k	$3,113.00
	SY4-24MFT	16 seconds	24 VAC ±10%, 50/60 Hz	75%	•			2-10 VDC/4-20 mA	$5,718.00
	SY4-120MFT	18 seconds	120 VAC ±10%, 50/60 Hz	75%	•			2-10 VDC/4-20 mA	$5,718.00
	SY4-230MFT	18 seconds	230 VAC ±10%, 50/60 Hz	75%	•			2-10 VDC/4-20 mA	$5,718.00
SY5	SY5-110	22 seconds	120 VAC ±10%, 50/60 Hz	30%		•	•	none, opt 1k	$3,568.00
	SY5-24	22 seconds	24 VAC ±10%, 50/60 Hz	30%		•	•	none, opt 1k	$3,568.00
	SY5-220	22 seconds	230 VAC ±10%, 50/60 Hz	30%		•	•	none, opt 1k	$3,568.00
	SY5-24MFT	22 seconds	24 VAC ±10%, 50/60 Hz	75%	•			2-10 VDC/4-20 mA	$6,171.00
	SY5-120MFT	25 seconds	120 VAC ±10%, 50/60 Hz	75%	•			2-10 VDC/4-20 mA	$6,171.00
	SY5-230MFT	25 seconds	230 VAC ±10%, 50/60 Hz	75%	•			2-10 VDC/4-20 mA	$6,171.00
SY6	SY6-110	28 seconds	120 VAC ±10%, 50/60 Hz	30%		•	•	none, opt 1k	$4,253.00
	SY6-220	28 seconds	230 VAC ±10%, 50/60 Hz	30%		•	•	none, opt 1k	$4,253.00
	SY6-120MFT	31 seconds	120 VAC ±10%, 50/60 Hz	75%	•			2-10 VDC/4-20 mA	$6,856.00
	SY6-230MFT	31 seconds	230 VAC ±10%, 50/60 Hz	75%	•			2-10 VDC/4-20 mA	$6,856.00
SY7	SY7-110	46 seconds	120 VAC ±10%, 50/60 Hz	30%		•	•	none, opt 1k	$5,090.00
	SY7-220	46 seconds	230 VAC ±10%, 50/60 Hz	30%		•	•	none, opt 1k	$5,090.00
	SY7-120MFT	55 seconds	120 VAC ±10%, 50/60 Hz	75%	•			2-10 VDC/4-20 mA	$7,625.00
	SY7-230MFT	55 seconds	230 VAC ±10%, 50/60 Hz	75%	•			2-10 VDC/4-20 mA	$7,625.00
SY8	SY8-110	46 seconds	120 VAC ±10%, 50/60 Hz	30%		•	•	none, opt 1k	$6,826.00
	SY8-220	46 seconds	230 VAC ±10%, 50/60 Hz	30%		•	•	none, opt 1k	$6,826.00
	SY8-120MFT	55 seconds	120 VAC ±10%, 50/60 Hz	75%	•			2-10 VDC/4-20 mA	$9,335.00
	SY8-230MFT	55 seconds	230 VAC ±10%, 50/60 Hz	75%	•			2-10 VDC/4-20 mA	$9,335.00
SY9	SY9-110	58 seconds	120 VAC ±10%, 50/60 Hz	30%		•	•	none, opt 1k	$8,447.00
	SY9-220	58 seconds	230 VAC ±10%, 50/60 Hz	30%		•	•	none, opt 1k	$8,447.00
	SY9-120MFT	70 seconds	120 VAC ±10%, 50/60 Hz	50%	•			2-10 VDC/4-20 mA	$10,977.00
	SY9-230MFT	70 seconds	230 VAC ±10%, 50/60 Hz	50%	•			2-10 VDC/4-20 mA	$10,977.00
SY10	SY10-110	58 seconds	120 VAC ±10%, 50/60 Hz	30%		•	•	none, opt 1k	$8,856.00
	SY10-220	58 seconds	230 VAC ±10%, 50/60 Hz	30%		•	•	none, opt 1k	$8,856.00
	SY10-120MFT	70 seconds	120 VAC ±10%, 50/60 Hz	50%	•			2-10 VDC/4-20 mA	$11,387.00
	SY10-230MFT	70 seconds	230 VAC ±10%, 50/60 Hz	50%	•			2-10 VDC/4-20 mA	$11,387.00
SY11	SY11-110	58 seconds	120 VAC ±10%, 50/60 Hz	30%		•	•	none, opt 1k	$11,738.00
	SY11-220	58 seconds	230 VAC ±10%, 50/60 Hz	30%		•	•	none, opt 1k	$11,738.00
	SY11-120MFT	70 seconds	120 VAC ±10%, 50/60 Hz	50%	•			2-10 VDC/4-20 mA	$14,273.00
	SY11-230MFT	70 seconds	230 VAC ±10%, 50/60 Hz	50%	•			2-10 VDC/4-20 mA	$14,273.00
SY12	SY12-110	58 seconds	120 VAC ±10%, 50/60 Hz	30%		•	•	none, opt 1k	$12,565.00
	SY12-220	58 seconds	230 VAC ±10%, 50/60 Hz	30%		•	•	none, opt 1k	$12,565.00
	SY12-120MFT	70 seconds	120 VAC ±10%, 50/60 Hz	50%	•			2-10 VDC/4-20 mA	$14,934.00
	SY12-230MFT	70 seconds	230 VAC ±10%, 50/60 Hz	50%	•			2-10 VDC/4-20 mA	$14,934.00

Proportional actuators will accept 0-10 VDC, 2-10 VDC, or 4-20 mA control signals as standard.
All SY actuators are non-spring return, but can be used with NSV-SY back up systems for fail-safe applications.
These products carry a two year warranty when sold as part of an assembly or with a UFLK retrofit kit.

067001 - 04/13 - Subject to change. © Belimo Aircontrols (USA), Inc.

2 YEAR WARRANTY

SY MULTI-FUNCTION TECHNOLOGY

Description	P-CODE	Control Input Range	Built-in Feedback	Loss of Signal	Running Time	List Price
MFT	ACE	2-10 VDC	2-10 VDC	stop	actuator(s) constant	No Charge
MFT	ACF	0.5-10 VDC	0.5-10 VDC	stop	actuator(s) constant	No Charge
MFT	ACG	4-20mA	4-20mA	stop	actuator(s) constant	No Charge
MFT	ACH	4-20mA	2-10 VDC	stop	actuator(s) constant	No Charge
MFT	W3E	0.02-5.00 seconds PWM*	2-10 VDC	stop	actuator(s) constant	No Charge
MFT	ACJ	2-10 VDC	2-10 VDC	open	actuator(s) constant	No Charge
MFT	ACK	0.5-10 VDC	0.5-10 VDC	open	actuator(s) constant	No Charge
MFT	ACL	4-20mA	4-20mA	open	actuator(s) constant	No Charge
MFT	ACM	4-20mA	2-10 VDC	open	actuator(s) constant	No Charge
MFT	ACN	2-10 VDC	2-10 VDC	close	actuator(s) constant	No Charge
MFT	ACP	0.5-10 VDC	0.5-10 VDC	close	actuator(s) constant	No Charge
MFT	ACR	4-20mA	4-20mA	close	actuator(s) constant	No Charge
MFT	ACS	4-20mA	2-10 VDC	close	actuator(s) constant	No Charge

Other configurations carry a $34.00 list price.

*Available only on -24MFT actuators.

Power Supply **24 VAC/VDC 50/60Hz, single phase**

Model	Torque	Speed	Power Consumption	Override	Weight
SY1-24(P)	35Nm/310 in-lbs	15 seconds	1.8A	8mm Wrench	2.0kg/4.9 lb.
SY2-24(MFT)	90Nm/801 in-lbs	15 seconds	3.0A	Hand Wheel	11kg/24.5 lb.
SY3-24(MFT)	150Nm/1335 in-lbs	22 seconds	3.0A	Hand Wheel	11kg/24.5 lb.
SY4-24(MFT)	400Nm/3560 in-lbs	16 seconds	6.0A	Hand Wheel	22kg/48.5 lb.
SY5-24(MFT)	500Nm/4450 in-lbs	22 seconds	6.5A	Hand Wheel	22kg/48.5 lb.

Power Supply **120 VAC 50/60Hz, single phase**

Model	Torque	Speed 60Hz	Speed 50Hz	Power Consumption	Override	Weight
SY1-110(P)	35Nm/310 in-lbs	12 seconds	13 seconds	0.5A	8mm Wrench	2.0kg/4.9 lb.
SY2-110(MFT)	90Nm/801 in-lbs	15 seconds	17 seconds	1.0A	Hand Wheel	11kg/24.5 lb.
SY3-110(MFT)	150Nm/1335 in-lbs	22 seconds	26 seconds	1.0A	Hand Wheel	11kg/24.5 lb.
SY4-110(MFT)	400Nm/3560 in-lbs	16 seconds	18 seconds	1.3A	Hand Wheel	22kg/48.5 lb.
SY5-110(MFT)	500Nm/4450 in-lbs	22 seconds	25 seconds	1.8A	Hand Wheel	22kg/48.5 lb.
SY6-110(MFT)	650Nm/5785 in-lbs	28 seconds	31 seconds	1.8A	Hand Wheel	22kg/48.5 lb.
SY7-110(MFT)	1000Nm/8900 in-lbs	46 seconds	55 seconds	3.2A	Hand Wheel	36kg/79.5 lb.
SY8-110(MFT)	1500Nm/13350 in-lbs	46 seconds	55 seconds	4.0A	Hand Wheel	36kg/79.5 lb.
SY9-110(MFT)	2000Nm/17800 in-lbs	58 seconds	70 seconds	3.2A	Hand Wheel	72kg/176.4 lb.
SY10-110(MFT)	2500Nm/22250 in-lbs	58 seconds	70 seconds	4.0A	Hand Wheel	72kg/176.4 lb.
SY11-110(MFT)	3000Nm/26700 in-lbs	58 seconds	70 seconds	3.0A	Hand Wheel	72kg/176.4 lb.
SY12-110(MFT)	3500Nm/31150 in-lbs	58 seconds	70 seconds	4.0A	Hand Wheel	72kg/176.4 lb.

Power Supply **230 VAC 50/60Hz, single phase**

Model	Torque	Speed 60Hz	Speed 50Hz	Power Consumption	Override	Weight
SY1-220(P)	35Nm/310 in-lbs	12 seconds	13 seconds	0.3A	8mm Wrench	2.0kg/4.9 lb.
SY2-220(MFT)	90Nm/801 in-lbs	15 seconds	17 seconds	0.5A	Hand Wheel	11kg/24.5 lb.
SY3-220(MFT)	150Nm/1335 in-lbs	22 seconds	26 seconds	0.5A	Hand Wheel	11kg/24.5 lb.
SY4-220(MFT)	400Nm/3560 in-lbs	16 seconds	18 seconds	0.6A	Hand Wheel	22kg/48.5 lb.
SY5-220(MFT)	500Nm/4450 in-lbs	22 seconds	25 seconds	0.7A	Hand Wheel	22kg/48.5 lb.
SY6-220(MFT)	650Nm/5785 in-lbs	28 seconds	31 seconds	0.8A	Hand Wheel	22kg/48.5 lb.
SY7-220(MFT)	1000Nm/8900 in-lbs	46 seconds	55 seconds	1.6A	Hand Wheel	36kg/79.5 lb.
SY8-220(MFT)	1500Nm/13350 in-lbs	46 seconds	55 seconds	2.0A	Hand Wheel	36kg/79.5 lb.
SY9-220(MFT)	2000Nm/17800 in-lbs	58 seconds	70 seconds	1.6A	Hand Wheel	72kg/176.4 lb.
SY10-220(MFT)	2500Nm/22250 in-lbs	58 seconds	70 seconds	2.0A	Hand Wheel	72kg/176.4 lb.
SY11-220(MFT)	3000Nm/26700 in-lbs	58 seconds	70 seconds	1.6A	Hand Wheel	72kg/176.4 lb.
SY12-220(MFT)	3500Nm/31150 in-lbs	58 seconds	70 seconds	2.2A	Hand Wheel	72kg/176.4 lb.

067001 - 04/13 - Subject to change. © Belimo Aircontrols (USA), Inc.

F6/F7 HDU Series Butterfly Valve, Non-Spring Return Actuators

2-Way, 3-Way, Undercut Disc

BELIMO

Valve Specifications	
Service	chilled, hot water, 60% glycol
Flow characteristic	modified equal percentage (F6...HDU) modified linear (F7...HDU)
Controllable flow range	82°
Sizes	2", 2½", 3", 4", 5", 6"
End fitting	for use with ANSI 125/150 flanges
Materials:	
Body	ductile iron, ASTM A536
Body finish	epoxy powder coat
Disc	304 stainless steel
Shaft	416 stainless steel
Seat	EPDM standard
O-ring	EPDM
Bushing	RPTFE
Media temperature range	-22°F to +248°F [-30°C to +120°C]
Body pressure rating	ASME/ANSI Class 125
Close-off pressure	50 psi
Rangeability	10:1 (for 30° to 70° range)
Maximum velocity	12 FPS



GM...



2*GM...

2 YEAR WARRANTY

F6HDU 2-way Butterfly Valve with Non-Spring Return Actuators

ACTUATOR PART #						ARB24-3-5	ARB24-MFT-5	GRB24-3-7	GRX24-MFT-7	2*GMB24-3-X1	2*GMX24-MFT-X1
Control type						On/Off, Floating Point	Proportional/MFT	On/Off, Floating Point	Proportional/MFT	On/Off, Floating Point	Proportional/MFT
Manual override						•	•	•	•	•	•
Running time						90 seconds	150 seconds	150 seconds	150 seconds	150 seconds	150 seconds
Noise level						<45 dB(A)	<45 dB(A)	<45 dB(A)	<45 dB(A)	<45 dB(A)	<45 dB(A)
ELECTRICAL CONNECTION:											
3 ft cable, ½" conduit fitting						•	•	•	•	•	•
Butterfly Valve Model #	**Cv 90°**	**Cv 60°**	**Valve Nominal Size Inches**	**DN/mm**	**Close-off psi**						
F650HDU	115	44	2"	50	50	$631.00	$775.00				
F665HDU	196	75	2½"	65	50	$666.00	$808.00				
F680HDU	302	116	3"	80	50	$678.00	$823.00				
F6100HDU	600	230	4"	100	50			$883.00	$965.00		
F6125HDU	1022	392	5"	125	50			$982.00	$1,068.00		
F6150HDU	1579	605	6"	150	50					$1,578.00	$1,750.00

F7HDU 3-way Butterfly Valve with Non-Spring Return Actuators

ACTUATOR PART #						AMB24-3-X1	AMX24-MFT-X1	GMB24-3-X1	GMX24-MFT-X1	2*GMB24-3-X1	2*GMX24-MFT-X1
Control type						On/Off, Floating Point	Proportional/MFT	On/Off, Floating Point	Proportional/MFT	On/Off, Floating Point	Proportional/MFT
Manual override						•	•	•	•	•	•
Running time						90 seconds	150 seconds	150 seconds	150 seconds	150 seconds	150 seconds
Noise level						<45 dB(A)	<45 dB(A)	<45 dB(A)	<45 dB(A)	<45 dB(A)	<45 dB(A)
ELECTRICAL CONNECTION:											
3 ft cable, ½" conduit fitting						•	•	•	•	•	•
Butterfly Valve Model #	**Cv 90°**	**Cv 60°**	**Valve Nominal Size Inches**	**DN/mm**	**Close-off psi**						
F750HDU	115	44	2"	50	50	$1,279.00	$1,443.00				
F765HDU	196	75	2½"	65	50	$1,435.00	$1,655.00				
F780HDU	302	116	3"	80	50			$1,595.00	$1,793.00		
F7100HDU	600	230	4"	100	50					$2,448.00	$2,656.00
F7125HDU	1022	392	5"	125	50					$2,722.00	$2,900.00
F7150HDU	1579	605	6"	150	50					$2,815.00	$3,059.00

MULTI-FUNCTION TECHNOLOGY

Description	P-CODE	Control Input Range	Running Time	Built-in Feedback	List Price
P-10001	A01	2-10 VDC	150 seconds	2-10 VDC	No Charge
P-10002	A02	0-10 VDC	150 seconds	0-10 VDC	No Charge
P-10028	A28	0-10 VDC	100 seconds	0-10 VDC	No Charge
P-10063	A63	0.5-4.5 VDC	150 seconds	0.5-4.5 VDC	No Charge
P-10064	A64	5.5-10 VDC	150 seconds	5.5-10 VDC	No Charge
P-20002	W02	0.02-5.00 seconds PWM	150 seconds	2-10 VDC	No Charge
P-20003	W03	0.10-25.5 seconds PWM	150 seconds	2-10 VDC	No Charge
P-30001	F01	Floating Point	150 seconds	2-10 VDC	No Charge
P-40002	J02	On/Off	150 seconds	2-10 VDC	No Charge

Other configurations carry a $34.00 list price.

067001 - 04/13 - Subject to change. © Belimo Aircontrols (USA), Inc.

Valve Specifications	
Service	chilled, hot water, 60% glycol
Flow characteristic	modified equal percentage (F6...HDU) modified linear (F7...HDU)
Controllable flow range	82°
Sizes	2", 2½", 3", 4", 5", 6"
End fitting	for use with ANSI 125/150 flanges
Materials:	
Body	ductile iron, ASTM A536
Body finish	epoxy powder coat
Disc	304 stainless steel
Shaft	416 stainless steel
Seat	EPDM standard
O-ring	EPDM
Bushing	RPTFE
Media temperature range	-22°F to +248°F [-30°C to +120°C]
Body pressure rating	ASME/ANSI Class 125
Close-off pressure	50 psi
Rangeability	10:1 (for 30° to 70° range)
Maximum velocity	12 FPS



GK...



2*AF...

2 YEAR WARRANTY

Visit *www.belimo.us* to see additional Spring Return and Electronic Fail-Safe options.

F6HDU 2-way Butterfly Valve with Spring Return and Electronic Fail-Safe Actuators

ACTUATOR PART #						AFBUP-X1	AFX24-MFT-X1	2*AFBUP-X1	2*AFX24-MFT-X1	GKRX24-3-7	GKRX24-MFT-7	2*GKX24-MFT-X1
Control type						On/Off	Proportional/MFT	On/Off	Proportional/MFT	On/Off, Floating Point	Proportional/MFT	Proportional/MFT
Manual override						•	•	•	•	•	•	•
Running time	Motor					75 seconds	150 seconds	75 seconds	150 seconds	150 seconds	150 seconds	150 seconds
	Spring					<20 seconds	<20 seconds	<20 seconds	<20 seconds			
	Fail-Safe									35 seconds	35 seconds	35 seconds
Noise level						<45 dB(A)	<45 dB(A)	<45 dB(A)	<45 dB(A)	<45 dB(A)	<45 dB(A)	<45 dB(A)
ELECTRICAL CONNECTION:												
3 ft cable, ½" conduit fitting						•	•	•	•	•	•	•
Butterfly Valve Model #	**C_V 90°**	**C_V 60°**	**Valve Nominal Size Inches**	**DN/mm**	**Close-off psi**							
F650HDU	115	44	2 "	50	50	$811.00	$954.00					
F665HDU	196	75	2½"	65	50	$844.00	$976.00					
F680HDU	302	116	3"	80	50	$858.00	$990.00					
F6100HDU	600	230	4"	100	50			$1,441.00	$1,750.00	$2,209.00	$2,618.00	
F6125HDU	1022	392	5"	125	50			$1,520.00	$1,827.00	$2,314.00	$2,791.00	
F6150HDU	1579	605	6"	150	50							$3,468.00

F7HDU 3-way Butterfly Valve with Spring and Electronic Fail-Safe Return Actuators

ACTUATOR PART #						AFBUP-X1	AFX24-MFT-X1	2*AFBUP-X1	2*AFX24-MFT-X1	2*GKX24-MFT-X1
Butterfly Valve Model #	**C_V 90°**	**C_V 60°**	**Valve Nominal Size Inches**	**DN/mm**	**Close-off psi**					
F750HDU	115	44	2"	50	50	$1,512.00	$1,785.00			
F765HDU	196	75	2½"	65	50			$2,224.00	$2,342.00	
F780HDU	302	116	3"	80	50			$2,280.00	$2,843.00	
F7100HDU	600	230	4"	100	50					$4,372.00
F7125HDU	1022	392	5"	125	50					$4,617.00
F7150HDU	1579	605	6"	150	50					$4,778.00

067001 - 04/13 - Subject to change. © Belimo Aircontrols (USA), Inc.

F6/F7 HDU Series Butterfly Valve, Non-Spring Return Actuators

With NEMA 4 Actuator - 2-Way, 3-Way, Undercut Disc

BELIMO

Valve Specifications	
Service	chilled, hot water, 60% glycol
Flow characteristic	modified equal percentage (F6...HDU) modified linear (F7...HDU)
Controllable flow range	82°
Sizes	GR: 2", 2½", 3", 4", 5" F6 GM: 2", 2½", 3", 4", 5", 6" F7
End fitting	for use with ANSI 125/150 flanges
Materials:	
Body	ductile iron, ASTM A536
Body finish	epoxy powder coat
Disc	304 stainless steel
Shaft	416 stainless steel
Seat	EPDM standard
O-ring	EPDM
Bushing	RPTFE
Media temperature range	-22°F to +248°F [-30°C to +120°C]
Body pressure rating	ASME/ANSI Class 125
Close-off pressure	50 psi
Rangeability	10:1 (for 30° to 70° range)
Maximum velocity	12 FPS



F650HDU+GRCX24-3-T N4

2 YEAR WARRANTY

F6HDU 2-way Butterfly Valve with Non-Spring Return Actuators

ACTUATOR PART #						GRCX24-3-T N4	GRX24-MFT-T N4	GRCX24-3-T N4	GRX24-MFT-T N4	GRCB24-3-T N4H	GRB24-MFT-T N4H	GRCB24-3-T N4H	GRB24-MFT-T N4H
Control type						On/Off, Floating Point	Proportional/ MFT	On/Off, Floating Point	Proportional/ MFT	On/Off, Floating Point	Proportional/ MFT	On/Off, Floating Point	Proportional/ MFT
Manual override						•	•	•	•	•	•	•	•
Running time						35 seconds	150 seconds	35 seconds	150 seconds	35 seconds	150 seconds	35 seconds	150 seconds
Noise level						<45 dB(A)	<45 dB(A)	<45 dB(A)	<45 dB(A)	<45 dB(A)	<45 dB(A)	<45 dB(A)	<45 dB(A)
ELECTRICAL CONNECTION:													
One (1) ½" conduit fitting						•	•	•	•	•	•	•	•
Covered terminal strip						•	•	•	•	•	•	•	•
Butterfly Valve Model #	**C_V 90°**	**C_V 60°**	**Valve Nominal Size Inches**	**DN/mm**	**Close-off psi**								
F650HDU	115	44	2"	50	50	$1,350.00	$1,451.00			$1,720.00	$1,822.00		
F665HDU	196	75	2½"	65	50	$1,415.00	$1,447.00			$1,785.00	$1,817.00		
F680HDU	302	116	3"	80	50	$1,498.00	$1,601.00			$1,868.00	$1,972.00		
F6100HDU	600	230	4"	100	50			$1,582.00	$1,720.00			$1,953.00	$2,091.00
F6125HDU	1022	392	5"	125	50			$1,645.00	$1,762.00			$2,015.00	$2,132.00

F7HDU 3-way Butterfly Valve with Non-Spring Return Actuators

ACTUATOR PART #						GMCX24-3-T-X1 N4	GMX24-MFT-T-X1 N4	2*GMCX24-3-T-X1 N4	2*GMX24-MFT-T-X1 N4	GMCB24-3-T-X1 N4H	GMB24-MFT-T-X1 N4H	2*GMCB24-3-T-X1 N4H	2*GMB24-MFT-T-X1 N4H
Control type						On/Off, Floating Point	Proportional/ MFT	On/Off, Floating Point	Proportional/ MFT	On/Off, Floating Point	Proportional/ MFT	On/Off, Floating Point	Proportional/ MFT
Manual override						•	•	•	•	•	•	•	•
Running time						35 seconds	150 seconds	35 seconds	150 seconds	35 seconds	150 seconds	35 seconds	150 seconds
Noise level						<45 dB(A)	<45 dB(A)	<45 dB(A)	<45 dB(A)	<45 dB(A)	<45 dB(A)	<45 dB(A)	<45 dB(A)
ELECTRICAL CONNECTION:													
One (1) ½" conduit fitting						•	•	•	•	•	•	•	•
Covered terminal strip						•	•	•	•	•	•	•	•
Butterfly Valve Model #	**C_V 90°**	**C_V 60°**	**Valve Nominal Size Inches**	**DN/mm**	**Close-off psi**								
F750HDU	115	44	2"	50	50	$2,107.00	$2,348.00			$2,478.00	$2,719.00		
F765HDU	196	75	2½"	65	50	$2,227.00	$2,461.00			$2,598.00	$2,791.00		
F780HDU	302	116	3"	80	50	$2,397.00	$2,450.00			$2,668.00	$2,848.00		
F7100HDU	600	230	4"	100	50			$4,014.00	$4,464.00			$4,384.00	$4,834.00
F7125HDU	1022	392	5"	125	50			$4,309.00	$4,709.00			$4,679.00	$5,080.00
F7150HDU	1579	605	6"	150	50			$4,659.00	$4,962.00			$5,029.00	$5,332.00

Specify when ordering Proportional (P-10001) 2-10 VDC, Floating Point (P-30001), On/Off (P-40002) for MFT actuators.

MULTI-FUNCTION TECHNOLOGY

Description	P-CODE	Control Input Range	Running Time	Built-in Feedback	List Price
P-10001	A01	2-10 VDC	150 seconds	2-10 VDC	No Charge
P-10002	A02	0-10 VDC	150 seconds	0-10 VDC	No Charge
P-10028	A28	0-10 VDC	100 seconds	0-10 VDC	No Charge
P-10063	A63	0.5-4.5 VDC	150 seconds	0.5-4.5 VDC	No Charge
P-10064	A64	5.5-10 VDC	150 seconds	5.5-10 VDC	No Charge
P-20002	W02	0.02-5.00 seconds PWM	150 seconds	2-10 VDC	No Charge
P-20003	W03	0.10-25.5 seconds PWM	150 seconds	2-10 VDC	No Charge
P-30001	F01	Floating Point	150 seconds	2-10 VDC	No Charge
P-40002	J02	On/Off	150 seconds	2-10 VDC	No Charge

Other configurations carry a $34.00 list price.

067001 - 04/13 - Subject to change. © Belimo Aircontrols (USA), Inc.

Valve Specifications

Service	chilled, hot water, 60% glycol
Flow characteristic	modified equal percentage (F6...HDU)
Controllable flow range	82°
Sizes	6"
End fitting	for use with ANSI 125/150 flanges
Materials:	
Body	ductile iron, ASTM A536
Body finish	epoxy powder coat
Disc	304 stainless steel
Shaft	416 stainless steel
Seat	EPDM standard
O-ring	EPDM
Bushing	RPTFE
Media temperature range	-22°F to +248°F [-30°C to +120°C]
Body pressure rating	ASME/ANSI Class 125
Close-off pressure	50 psi
Rangeability	10:1 (for 30° to 70° range)
Maximum velocity	12 FPS



F6150HDU+DRX24-MFT-T N4

2 YEAR WARRANTY

F6HDU 2-way Butterfly Valve with Non-Spring Return Actuators

ACTUATOR PART #						DRCX24-3-T N4	DRX24-MFT-T N4	DRCX24-3-T	DRX24-MFT-T	DRCB24-3-T N4H	DRB24-MFT-T N4H
Control type						On/Off, Floating Point	Proportional/MFT	On/Off, Floating Point	Proportional/MFT	On/Off, Floating Point	Proportional/MFT
Manual override						•	•	•	•	•	•
Running time						35 seconds	150 seconds	35 seconds	150 seconds	35 seconds	150 seconds
Noise level						<45 dB(A)	<45 dB(A)	<45 dB(A)	<45 dB(A)	<45 dB(A)	<45 dB(A)
ELECTRICAL CONNECTION:											
One (1) ½" conduit fitting						•	•	•	•	•	•
Covered terminal strip						•	•	•	•	•	•
Butterfly Valve Model #	**Cv 90°**	**Cv 60°**	**Valve Nominal Size Inches**	**DN/mm**	**Close-off psi**						
F6150HDU	1579	605	6"	150	50	$2,413.00	$2,603.00	$1,444.00	$1,631.00	$2,783.00	$2,974.00

Specify when ordering Proportional (P-10001) 2-10 VDC, Floating Point (P-30001), On/Off (P-40002) for MFT actuators.

MULTI-FUNCTION TECHNOLOGY

Description	P-CODE	Control Input Range	Running Time	Built-in Feedback	List Price
P-10001	A01	2-10 VDC	150 seconds	2-10 VDC	No Charge
P-10002	A02	0-10 VDC	150 seconds	0-10 VDC	No Charge
P-10028	A28	0-10 VDC	100 seconds	0-10 VDC	No Charge
P-10063	A63	0.5-4.5 VDC	150 seconds	0.5-4.5 VDC	No Charge
P-10064	A64	5.5-10 VDC	150 seconds	5.5-10 VDC	No Charge
P-20002	W02	0.02-5.00 seconds PWM	150 seconds	2-10 VDC	No Charge
P-20003	W03	0.10-25.5 seconds PWM	150 seconds	2-10 VDC	No Charge
P-30001	F01	Floating Point	150 seconds	2-10 VDC	No Charge
P-40002	J02	On/Off	150 seconds	2-10 VDC	No Charge

Other configurations carry a $34.00 list price.

067001 - 04/13 - Subject to change. © Belimo Aircontrols (USA), Inc.

F6 HDU Series Butterfly Valve, Electronic Fail-Safe Actuators

DKR With NEMA 2 & NEMA 4 Actuator - 2-Way, Undercut Disc

BELIMO

Valve Specifications	
Service	chilled, hot water, 60% glycol
Flow characteristic	modified equal percentage (F6...HDU)
Controllable flow range	82°
Sizes	6"
End fitting	for use with ANSI 125/150 flanges
Materials:	
Body	ductile iron, ASTM A536
Body finish	epoxy powder coat
Disc	304 stainless steel
Shaft	416 stainless steel
Seat	EPDM standard
O-ring	EPDM
Bushing	RPTFE
Media temperature range	-22°F to +248°F [-30°C to +120°C]
Body pressure rating	ASME/ANSI Class 125
Close-off pressure	50 psi
Rangeability	10:1 (for 30° to 70° range)
Maximum velocity	12 FPS



F6150HDU+DKRX24-MFT-T N4H

2 YEAR WARRANTY

F6HDU 2-way Butterfly Valve with Electronic Fail-Safe Actuators

ACTUATOR PART #						DKRX24-3-T N4	DKRX24-MFT-T N4	DKRX24-3-T	DKRX24-MFT-T	DKRB24-3-T N4H	DKRB24-MFT-T N4H
Control type						On/Off, Floating Point	Proportional/MFT	On/Off, Floating Point	Proportional/MFT	On/Off, Floating Point	Proportional/MFT
Manual override						•	•	•	•	•	•
Running time					Motor	90 seconds	150 seconds	90 seconds	150 seconds	90 seconds	150 seconds
					Fail-Safe	35 seconds	35 seconds	35 seconds	35 seconds	35 seconds	35 seconds
Noise level						<45 dB(A)	<45 dB(A)	<45 dB(A)	<45 dB(A)	<45 dB(A)	<45 dB(A)
ELECTRICAL CONNECTION:											
One (1) ½" conduit fitting						•	•	•	•	•	•
Covered terminal strip						•	•	•	•	•	•
Butterfly Valve Model #	**C_V 90°**	**C_V 60°**	**Valve Nominal Size Inches**	**DN/mm**	**Close-off psi**						
F6150HDU	1579	605	6"	150	50	$2,952.00	$3,325.00	$2,353.00	$2,725.00	$3,323.00	$3,696.00

MULTI-FUNCTION TECHNOLOGY

Description	P-CODE	Control Input Range	Running Time	Built-in Feedback	List Price
P-10001	A01	2-10 VDC	150 seconds	2-10 VDC	No Charge
P-10002	A02	0-10 VDC	150 seconds	0-10 VDC	No Charge
P-10028	A28	0-10 VDC	100 seconds	0-10 VDC	No Charge
P-10063	A63	0.5-4.5 VDC	150 seconds	0.5-4.5 VDC	No Charge
P-10064	A64	5.5-10 VDC	150 seconds	5.5-10 VDC	No Charge
P-20002	W02	0.02-5.00 seconds PWM	150 seconds	2-10 VDC	No Charge
P-20003	W03	0.10-25.5 seconds PWM	150 seconds	2-10 VDC	No Charge
P-30001	F01	Floating Point	150 seconds	2-10 VDC	No Charge
P-40002	J02	On/Off	150 seconds	2-10 VDC	No Charge

Other configurations carry a $34.00 list price.

067001 - 04/13 - Subject to change. © Belimo Aircontrols (USA), Inc.

Valve Specifications	
Service	chilled, hot water, 60% glycol
Flow characteristic	modified equal percentage (F6...HDU) modified linear (F7...HDU)
Controllable flow range	82°
Sizes	2", 2½", 3", 4", 5", 6"
End fitting	for use with ANSI 125/150 flanges
Materials:	
Body	ductile iron, ASTM A536
Body finish	epoxy powder coat
Disc	304 stainless steel
Shaft	416 stainless steel
Seat	EPDM standard
O-ring	EPDM
Bushing	RPTFE
Media temperature range	-22°F to +248°F [-30°C to +120°C]
Body pressure rating	ASME/ANSI Class 125
Close-off pressure	50 psi
Rangeability	10:1 (for 30° to 70° range)
Maximum velocity	12 FPS



F6 SY...



F7 SY...

2 YEAR WARRANTY

F6HDU 2-way Butterfly Valve with NEMA 4X Industrial Actuators

ACTUATOR PART #						SY1-24, SY1-110, SY1-220	SY1-24P, SY1-110P, SY1-220P	SY2-24, SY2-110, SY2-220	SY2-24MFT, SY2-120MFT, SY2-230MFT
Control type						On/Off, Floating Point	Proportional	On/Off, Floating Point	Proportional/MFT
Manual override						•	•	•	•
Running time						15, 12, 12 seconds	15, 13, 13 seconds	15 seconds	15, 17, 17 seconds
ELECTRICAL CONNECTION:									
Two (2) ½" conduit fittings						•	•	•	•
Covered terminal strip						•	•	•	•
Butterfly Valve Model #	**C_V 90°**	**C_V 60°**	**Valve Nominal Size Inches**	**DN/mm**	**Close-off psi**				
F650HDU	115	44	2"	50	50	$2,172.00	$3,436.00		
F665HDU	196	75	2½"	65	50	$2,192.00	$3,450.00		
F680HDU	302	116	3"	80	50	$2,231.00	$3,468.00		
F6100HDU	600	230	4"	100	50			$2,547.00	$3,815.00
F6125HDU	1022	392	5"	125	50			$2,649.00	$3,914.00
F6150HDU	1579	605	6"	150	50			$3,339.00	$4,468.00

F7HDU 3-way Butterfly Valve with NEMA 4X Industrial Style Actuators

ACTUATOR PART #						SY1-24, SY1-110, SY1-220	SY1-24P, SY1-110P, SY1-220P	SY2-24, SY2-110, SY2-220	SY2-24MFT, SY2-120MFT, SY2-230MFT
Butterfly Valve Model #	**C_V 90°**	**C_V 60°**	**Valve Nominal Size Inches**	**DN/mm**	**Close-off psi**				
F750HDU	115	44	2"	50	50	$3,589.00	$4,828.00		
F765HDU	196	75	2½"	65	50	$3,621.00	$4,907.00		
F780HDU	302	116	3"	80	50			$3,969.00	$5,093.00
F7100HDU	600	230	4"	100	50			$4,226.00	$5,602.00
F7125HDU	1022	392	5"	125	50			$4,700.00	$5,940.00
F7150HDU	1579	605	6"	150	50			$5,317.00	$6,742.00

SY MULTI-FUNCTION TECHNOLOGY

Description	P-CODE	Control Input Range	Built-in Feedback	Loss of Signal	Running Time	List Price
MFT	ACE	2-10 VDC	2-10 VDC	stop	actuator(s) constant	No Charge
MFT	ACF	0.5-10 VDC	0.5-10 VDC	stop	actuator(s) constant	No Charge
MFT	ACG	4-20mA	4-20mA	stop	actuator(s) constant	No Charge
MFT	ACH	4-20mA	2-10 VDC	stop	actuator(s) constant	No Charge
MFT	W3E	0.02-5.00 seconds PWM*	2-10 VDC	stop	actuator(s) constant	No Charge
MFT	ACJ	2-10 VDC	2-10 VDC	open	actuator(s) constant	No Charge
MFT	ACK	0.5-10 VDC	0.5-10 VDC	open	actuator(s) constant	No Charge
MFT	ACL	4-20mA	4-20mA	open	actuator(s) constant	No Charge
MFT	ACM	4-20mA	2-10 VDC	open	actuator(s) constant	No Charge
MFT	ACN	2-10 VDC	2-10 VDC	close	actuator(s) constant	No Charge
MFT	ACP	0.5-10 VDC	0.5-10 VDC	close	actuator(s) constant	No Charge
MFT	ACR	4-20mA	4-20mA	close	actuator(s) constant	No Charge
MFT	ACS	4-20mA	2-10 VDC	close	actuator(s) constant	No Charge

Other configurations carry a $34.00 list price.
*Available only on -24MFT actuators.

067001 - 04/13 - Subject to change. © Belimo Aircontrols (USA), Inc.

F6/F7 HDU Series Butterfly Valve, Non-Spring Return Actuators

With NEMA 4X Industrial Actuator - 2-Way, 3-Way, Undercut Disc

BELIMO

Valve Specifications

Service	chilled, hot water, 60% glycol
Flow characteristic	modified equal percentage (F6...HDU) modified linear (F7...HDU)
Controllable flow range	82°
Sizes	8", 10", 12"
End fitting	for use with ANSI 125/150 flanges
Materials:	
Body	ductile iron, ASTM A536
Body finish	epoxy powder coat
Disc	304 stainless steel
Shaft	416 stainless steel
Seat	EPDM standard
O-ring	EPDM
Bushing	RPTFE
Media temperature range	-22°F to +248°F [-30°C to +120°C]
Body pressure rating	ASME/ANSI Class 125
Close-off pressure	50 psi
Rangeability	10:1 (for 30° to 70° range)
Maximum velocity	12 FPS



F6 SY...



F7 SY...

2 YEAR WARRANTY

F6HDU 2-way Butterfly Valve with NEMA 4X Industrial Actuators

ACTUATOR PART #						SY3-24, SY3-110, SY3-220	SY3-24MFT, SY3-120MFT, SY3-230MFT	SY4-24, SY4-110, SY4-220	SY4-24MFT, SY4-120MFT, SY4-230MFT
Control type						On/Off, Floating Point	Proportional/MFT	On/Off, Floating Point	Proportional/MFT
Manual override						•	•	•	•
Running time						22 seconds	22, 26, 26 seconds	16 seconds	16, 18, 18 seconds
ELECTRICAL CONNECTION:									
Two (2) ½" conduit fittings						•	•	•	•
Covered terminal strip						•	•	•	•
Butterfly Valve Model #	**C_V 90°**	**C_V 60°**	**Valve Nominal Size Inches**	**DN/mm**	**Close-off psi**				
F6200HDU	3136	1202	8"	200	50	$3,525.00	$4,806.00		
F6250HDU	5340	2047	10"	250	50	$4,493.00	$6,455.00		
F6300HDU	8250	3062	12"	300	50			$6,440.00	$7,704.00

F7HDU 3-way Butterfly Valve with NEMA 4X Industrial Style Actuators

ACTUATOR PART #						SY3-24, SY3-110, SY3-220	SY3-24MFT, SY3-120MFT, SY3-230MFT	SY4-24, SY4-110, SY4-220	SY4-24MFT, SY4-120MFT, SY4-230MFT
Control type						On/Off, Floating Point	Proportional/MFT	On/Off, Floating Point	Proportional/MFT
Manual override						•	•	•	•
Running time						22 seconds	22, 26, 26 seconds	16 seconds	16, 18, 18 seconds
Butterfly Valve Model #	**C_V 90°**	**C_V 60°**	**Valve Nominal Size Inches**	**DN/mm**	**Close-off psi**				
F7200HDU	3136	1202	8"	200	50	$6,710.00	$8,049.00		
F7250HDU	5340	2047	10"	250	50			$8,076.00	$9,809.00
F7300HDU	8250	3062	12"	300	50			$11,152.00	$12,652.00

SY MULTI-FUNCTION TECHNOLOGY

Description	P-CODE	Control Input Range	Built-in Feedback	Loss of Signal	Running Time	List Price
MFT	ACE	2-10 VDC	2-10 VDC	stop	actuator(s) constant	No Charge
MFT	ACF	0.5-10 VDC	0.5-10 VDC	stop	actuator(s) constant	No Charge
MFT	ACG	4-20mA	4-20mA	stop	actuator(s) constant	No Charge
MFT	ACH	4-20mA	2-10 VDC	stop	actuator(s) constant	No Charge
MFT	W3E	0.02-5.00 seconds PWM*	2-10 VDC	stop	actuator(s) constant	No Charge
MFT	ACJ	2-10 VDC	2-10 VDC	open	actuator(s) constant	No Charge
MFT	ACK	0.5-10 VDC	0.5-10 VDC	open	actuator(s) constant	No Charge
MFT	ACL	4-20mA	4-20mA	open	actuator(s) constant	No Charge
MFT	ACM	4-20mA	2-10 VDC	open	actuator(s) constant	No Charge
MFT	ACN	2-10 VDC	2-10 VDC	close	actuator(s) constant	No Charge
MFT	ACP	0.5-10 VDC	0.5-10 VDC	close	actuator(s) constant	No Charge
MFT	ACR	4-20mA	4-20mA	close	actuator(s) constant	No Charge
MFT	ACS	4-20mA	2-10 VDC	close	actuator(s) constant	No Charge

Other configurations carry a $34.00 list price.

*Available only on -24MFT actuators.

067001 - 04/13 - Subject to change. © Belimo Aircontrols (USA), Inc.

Valve Specifications

Service	chilled, hot water, 60% glycol
Flow characteristic	modified equal percentage (F6...HD) modified linear (F7...HD)
Controllable flow range	82°
Sizes	2", 2½", 3", 4"
End fitting	for use with ANSI 125/150 flanges
Materials:	
Body	ductile iron, ASTM A536
Body finish	epoxy powder coat
Disc	304 stainless steel
Shaft	416 stainless steel
Seat	EPDM standard
O-ring	EPDM
Bushing	RPTFE
Media temperature range	-22°F to +248°F [-30°C to +120°C]
Body pressure rating	ASME/ANSI Class 125
Close-off pressure	200 psi
Rangeability	10:1 (for 30° to 70° range)
Maximum velocity	12 FPS



GM...



2*GM...

2 YEAR WARRANTY

F6HD 2-way Butterfly Valve with Non-Spring Return Actuators

ACTUATOR PART #						ARB24-3-5	ARB24-MFT-5	GRB24-3-5	GRB24-MFT-5	2*GMB24-3-X1	2*GMX24-MFT-X1
Control type						On/Off, Floating Point	Proportional/MFT	On/Off, Floating Point	Proportional/MFT	On/Off, Floating Point	Proportional/MFT
Manual override						•	•	•	•	•	•
Running time						90 seconds	150 seconds	150 seconds	150 seconds	150 seconds	150 seconds
Noise level						<45 dB(A)	<45 dB(A)	<45 dB(A)	<45 dB(A)	<45 dB(A)	<45 dB(A)
ELECTRICAL CONNECTION:											
3 ft cable, ½" conduit fitting						•	•	•	•	•	•
Butterfly Valve Model #	**C_V 90°**	**C_V 60°**	**Valve Nominal Size Inches**	**DN/mm**	**Close-off psi**						
F650HD	115	44	2"	50	200	$657.00	$786.00				
F665HD	196	75	2½"	65	200	$677.00	$819.00				
F680HD	302	116	3"	80	200			$936.00	$1,006.00		
F6100HD	600	230	4"	100	200					$1,443.00	$1,619.00

F7HD 3-way Butterfly Valve with Non-Spring Return Actuators

ACTUATOR PART #						AMB24-3-X1	AMX24-MFT-X1	GMB24-3-X1	GMX24-MFT-X1	2*GMB24-3-X1	2*GMX24-MFT-X1
Control type						On/Off, Floating Point	Proportional/MFT	On/Off, Floating Point	Proportional/MFT	On/Off, Floating Point	Proportional/MFT
Manual override						•	•	•	•	•	•
Running time						90 seconds	150 seconds	150 seconds	150 seconds	150 seconds	150 seconds
Noise level						<45 dB(A)	<45 dB(A)	<45 dB(A)	<45 dB(A)	<45 dB(A)	<45 dB(A)
ELECTRICAL CONNECTION:											
3 ft cable, ½" conduit fitting						•	•	•	•	•	•
Butterfly Valve Model #	**C_V 90°**	**C_V 60°**	**Valve Nominal Size Inches**	**DN/mm**	**Close-off psi**						
F750HD	115	44	2"	50	200	$1,313.00	$1,491.00				
F765HD	196	75	2½"	65	200			$1,585.00	$1,793.00		
F780HD	302	116	3"	80	200					$1,986.00	$2,444.00

MULTI-FUNCTION TECHNOLOGY

Description	P-CODE	Control Input Range	Running Time	Built-in Feedback	List Price
P-10001	A01	2-10 VDC	150 seconds	2-10 VDC	No Charge
P-10002	A02	0-10 VDC	150 seconds	0-10 VDC	No Charge
P-10028	A28	0-10 VDC	100 seconds	0-10 VDC	No Charge
P-10063	A63	0.5-4.5 VDC	150 seconds	0.5-4.5 VDC	No Charge
P-10064	A64	5.5-10 VDC	150 seconds	5.5-10 VDC	No Charge
P-20002	W02	0.02-5 seconds PWM	150 seconds	2-10 VDC	No Charge
P-20003	W03	0.10-25.5 seconds PWM	150 seconds	2-10 VDC	No Charge
P-30001	F01	Floating Point	150 seconds	2-10 VDC	No Charge
P-40002	J02	On/Off	150 seconds	2-10 VDC	No Charge

Other configurations carry a $34.00 list price.

067001 - 04/13 - Subject to change. © Belimo Aircontrols (USA), Inc.

F6/F7 HD Series Butterfly Valve, Spring Return and Electronic Fail-Safe Actuators

2-Way, 3-Way, Full Rated Disc

Valve Specifications	
Service	chilled, hot water, 60% glycol
Flow characteristic	modified equal percentage (F6...HD) modified linear (F7...HD)
Controllable flow range	82°
Sizes	2", 2½", 3", 4"
End fitting	for use with ANSI 125/150 flanges
Materials:	
Body	ductile iron, ASTM A536
Body finish	epoxy powder coat
Disc	304 stainless steel
Shaft	416 stainless steel
Seat	EPDM standard
O-ring	EPDM
Bushing	RPTFE
Media temperature range	-22°F to +248°F [-30°C to +120°C]
Body pressure rating	ASME/ANSI Class 125
Close-off pressure	200 psi
Rangeability	10:1 (for 30° to 70° range)
Maximum velocity	12 FPS



F6 GK...



F7 2*AF...

2 YEAR WARRANTY

Visit *www.belimo.us* to see additional Spring Return and Electronic Fail-Safe options.

F6HD 2-way Butterfly Valve with Spring Return and Electronic Fail-Safe Actuators

ACTUATOR PART #						AFBUP-X1	AFX24-MFT-X1	2*AFX24-MFT-X1	GKRB24-3-5	GKRX24-MFT-5	2*GKX24-MFT-X1
Control type						On/Off	Proportional/MFT	Proportional/MFT	On/Off Floating Point	Proportional/MFT	Proportional/MFT
Manual override						•	•	•	•	•	•
Running time					Motor	75 seconds	150 seconds	150 seconds	150 seconds	150 seconds	150 seconds
					Spring	<20 seconds	<20 seconds	<20 seconds			
					Fail-Safe				35 seconds	35 seconds	35 seconds
Noise level						<45 dB(A)	<45 dB(A)	<45 dB(A)	<45 dB(A)	<45 dB(A)	<45 dB(A)
ELECTRICAL CONNECTION:											
3 ft cable, ½" conduit fitting						•	•	•	•	•	•
Butterfly Valve Model #	**C_V 90°**	**C_V 60°**	**Valve Nominal Size Inches**	**DN/mm**	**Close-off psi**						
F650HD	115	44	2"	50	200	$876.00	$1,075.00				
F665HD	196	75	2½"	65	200	$1,071.00	$1,311.00				
F680HD	302	116	3"	80	200			$1,790.00	$1,599.00	$1,865.00	
F6100HD	600	230	4"	100	200						$3,338.00

F7HD 3-way Butterfly Valve with Spring Return and Electronic Fail-Safe Actuators

ACTUATOR PART #						AFBUP-X1	AFX24-MFT-X1	2*AFBUP-X1	2*AFX24-MFT-X1	GKX24-MFT-X1	2*GKX24-MFT-X1
Butterfly Valve Model #	**C_V 90°**	**C_V 60°**	**Valve Nominal Size Inches**	**DN/mm**	**Close-off psi**						
F750HD	115	44	2"	50	200	$1,540.00	$1,801.00				
F765HD	196	75	2½"	65	200			$2,256.00	$2,748.00	$2,625.00	
F780HD	302	116	3"	80	200						$2,625.00

067001 - 04/13 - Subject to change. © Belimo Aircontrols (USA), Inc.

Valve Specifications

Service	chilled, hot water, 60% glycol
Flow characteristic	modified equal percentage (F6...HD) modified linear (F7...HD)
Controllable flow range	82°
Sizes	2", 2½", 3", 4"
End fitting	for use with ANSI 125/150 flanges
Materials:	
Body	ductile iron, ASTM A536
Body finish	epoxy powder coat
Disc	304 stainless steel
Shaft	416 stainless steel
Seat	EPDM standard
O-ring	EPDM
Bushing	RPTFE
Media temperature range	-22°F to +248°F [-30°C to +120°C]
Body pressure rating	ASME/ANSI Class 125
Close-off pressure	200 psi
Rangeability	10:1 (for 30° to 70° range)
Maximum velocity	12 FPS



F750HD+2*GMCB24-3-T-X1 N4

2 YEAR WARRANTY

F6HD 2-way Butterfly Valve with Non-Spring Return Actuators

ACTUATOR PART #						GRCX24-3-T N4	GRX24-MFT-T N4	GRCB24-3-T N4H	GRB24-MFT-T N4H
Control type						On/Off, Floating Point	Proportional/MFT	On/Off, Floating Point	Proportional/MFT
Manual override						•	•	•	•
Running time						35 seconds	150 seconds	35 seconds	150 seconds
Noise level						<45 dB(A)	<45 dB(A)	<45 dB(A)	<45 dB(A)
ELECTRICAL CONNECTION:									
½" conduit fitting						•	•	•	•
Covered terminal strip						•	•	•	•
Butterfly Valve Model #	**C_V 90°**	**C_V 60°**	**Valve Nominal Size Inches**	**DN/mm**	**Close-off psi**				
F650HD	115	44	2"	50	200	$1,357.00	$1,690.00	$1,727.00	$2,061.00
F665HD	196	75	2½"	65	200	$1,554.00	$1,887.00	$1,924.00	$2,257.00
F680HD	302	116	3"	80	200	$1,578.00	$1,911.00	$1,949.00	$2,281.00

F7HD 3-way Butterfly Valve with Non-Spring Return Actuators

ACTUATOR PART #						GMCX24-3-T-X1 N4	GMX24-MFT-T-X1 N4	2*GMCX24-3-T-X1 N4	2*GMX24-MFT-T-X1 N4	GMCB24-3-T-X1 N4H	GMB24-MFT-T-X1 N4H	2*GMCB24-3-T-X1 N4H	2*GMB24-MFT-T-X1 N4H
Control type						On/Off, Floating Point	Proportional/MFT	On/Off, Floating Point	Proportional/MFT	On/Off, Floating Point	Proportional/MFT	On/Off, Floating Point	Proportional/MFT
Manual override						•	•	•	•	•	•	•	•
Running time						35 seconds	150 seconds	35 seconds	150 seconds	35 seconds	150 seconds	35 seconds	150 seconds
Noise level						<45 dB(A)	<45 dB(A)	<45 dB(A)	<45 dB(A)	<45 dB(A)	<45 dB(A)	<45 dB(A)	<45 dB(A)
ELECTRICAL CONNECTION:													
One (1) ½" conduit fitting						•	•	•	•	•	•	•	•
Covered terminal strip						•	•	•	•	•	•	•	•
Butterfly Valve Model #	**C_V 90°**	**C_V 60°**	**Valve Nominal Size Inches**	**DN/mm**	**Close-off psi**								
F750HD	115	44	2"	50	200	$2,062.00	$2,364.00			$2,432.00	$2,733.00		
F765HD	196	75	2½"	65	200	$2,363.00	$2,696.00			$2,733.00	$3,067.00		
F780HD	302	116	3"	80	200			$3,585.00	$4,252.00			$3,956.00	$4,622.00
F7100HD	600	230	4"	100	200			$3,922.00	$4,589.00			$4,305.00	$4,971.00

MULTI-FUNCTION TECHNOLOGY

Description	P-CODE	Control Input Range	Running Time	Built-in Feedback	List Price
P-10001	A01	2-10 VDC	150 seconds	2-10 VDC	No Charge
P-10002	A02	0-10 VDC	150 seconds	0-10 VDC	No Charge
P-10028	A28	0-10 VDC	100 seconds	0-10 VDC	No Charge
P-10063	A63	0.5-4.5 VDC	150 seconds	0.5-4.5 VDC	No Charge
P-10064	A64	5.5-10 VDC	150 seconds	5.5-10 VDC	No Charge
P-20002	W02	0.02-5 seconds PWM	150 seconds	2-10 VDC	No Charge
P-20003	W03	0.10-25.5 seconds PWM	150 seconds	2-10 VDC	No Charge
P-30001	F01	Floating Point	150 seconds	2-10 VDC	No Charge
P-40002	J02	On/Off	150 seconds	2-10 VDC	No Charge

Other configurations carry a $34.00 list price.

067001 - 04/13 - Subject to change. © Belimo Aircontrols (USA), Inc.

F6 HD Series Butterfly Valve, Non-Spring Return Actuators

DR With NEMA 2 & NEMA 4 Industrial Actuator - 2-Way, Full Rated Disc

BELIMO

Valve Specifications

Service	chilled, hot water, 60% glycol
Flow characteristic	modified equal percentage (F6...HD)
Controllable flow range	82°
Sizes	4", 5"
End fitting	for use with ANSI 125/150 flanges
Materials:	
Body	ductile iron, ASTM A536
Body finish	epoxy powder coat
Disc	304 stainless steel
Shaft	416 stainless steel
Seat	EPDM standard
O-ring	EPDM
Bushing	RPTFE
Media temperature range	-22°F to +248°F [-30°C to +120°C]
Body pressure rating	ASME/ANSI Class 125
Close-off pressure	200 psi
Rangeability	10:1 (for 30° to 70° range)
Maximum velocity	12 FPS



F6100HD+DRCX24-3-T N4

2 YEAR WARRANTY

F6HD 2-way Butterfly Valve with Non-Spring Return Actuators

ACTUATOR PART #						DRCX24-3-T N4	DRX24-MFT-T N4	DRCX24-3-T	DRX24-MFT-T	DRCB24-3-T N4H	DRB24-MFT-T N4H
Control type						On/Off, Floating Point	Proportional/MFT	On/Off, Floating Point	Proportional/MFT	On/Off, Floating Point	Proportional/MFT
Manual override						•	•	•	•	•	•
Running time						35 seconds	150 seconds	35 seconds	150 seconds	35 seconds	150 seconds
Noise level						<45 dB(A)	<45 dB(A)	<45 dB(A)	<45 dB(A)	<45 dB(A)	<45 dB(A)
ELECTRICAL CONNECTION:											
½" conduit fitting						•	•	•	•	•	•
Covered terminal strip						•	•	•	•	•	•
Butterfly Valve Model #	**C_V 90°**	**C_V 60°**	**Valve Nominal Size Inches**	**DN/mm**	**Close-off psi**						
F6100HD	600	230	4"	100	200	$1,820.00	$2,011.00	$1,309.00	$1,500.00	$2,190.00	$2,382.00
F6125HD	1022	392	5"	125	200	$1,898.00	$2,089.00	$1,387.00	$1,578.00	$2,268.00	$2,460.00

MULTI-FUNCTION TECHNOLOGY

Description	P-CODE	Control Input Range	Running Time	Built-in Feedback	List Price
P-10001	A01	2-10 VDC	150 seconds	2-10 VDC	No Charge
P-10002	A02	0-10 VDC	150 seconds	0-10 VDC	No Charge
P-10028	A28	0-10 VDC	100 seconds	0-10 VDC	No Charge
P-10063	A63	0.5-4.5 VDC	150 seconds	0.5-4.5 VDC	No Charge
P-10064	A64	5.5-10 VDC	150 seconds	5.5-10 VDC	No Charge
P-20002	W02	0.02-5 seconds PWM	150 seconds	2-10 VDC	No Charge
P-20003	W03	0.10-25.5 seconds PWM	150 seconds	2-10 VDC	No Charge
P-30001	F01	Floating Point	150 seconds	2-10 VDC	No Charge
P-40002	J02	On/Off	150 seconds	2-10 VDC	No Charge

Other configurations carry a $34.00 list price.

067001 - 04/13 - Subject to change. © Belimo Aircontrols (USA), Inc.

Valve Specifications

Service	chilled, hot water, 60% glycol
Flow characteristic	modified equal percentage (F6...HD)
Controllable flow range	82°
Sizes	4"
End fitting	for use with ANSI 125/150 flanges
Materials:	
Body	ductile iron, ASTM A536
Body finish	epoxy powder coat
Disc	304 stainless steel
Shaft	416 stainless steel
Seat	EPDM standard
O-ring	EPDM
Bushing	RPTFE
Media temperature range	-22°F to +248°F [-30°C to +120°C]
Body pressure rating	ASME/ANSI Class 125
Close-off pressure	200 psi
Rangeability	10:1 (for 30° to 70° range)
Maximum velocity	12 FPS



F6100HD+DKRX24-3-T N4

2 YEAR WARRANTY

F6HD 2-way Butterfly Valve with Electronic Fail-Safe Actuators

ACTUATOR PART #		DKRX24-3-T N4	DKRX24-MFT-T N4	DKRX24-3-T	DKRX24-MFT-T	DKRB24-3-T N4H	DKRB24-MFT-T N4H
Control type		On/Off, Floating Point	Proportional/MFT	On/Off, Floating Point	Proportional/MFT	On/Off, Floating Point	Proportional/MFT
Manual override		•	•	•	•	•	•
Running time	Motor	90 seconds	150 seconds	90 seconds	150 seconds	90 seconds	150 seconds
	Fail-Safe	35 seconds	35 seconds	35 seconds	35 seconds	35 seconds	35 seconds
Noise level		<45 dB(A)	<45 dB(A)	<45 dB(A)	<45 dB(A)	<45 dB(A)	<45 dB(A)
ELECTRICAL CONNECTION:							
½" conduit fitting		•	•	•	•	•	•
Covered terminal strip		•	•	•	•	•	•

Butterfly Valve Model #	C_V 90°	C_V 60°	Valve Nominal Size Inches	DN/mm	Close-off psi						
F6100HD	600	230	4"	100	200	$2,507.00	$2,879.00	$1,906.00	$2,279.00	$2,877.00	$3,250.00

MULTI-FUNCTION TECHNOLOGY

Description	P-CODE	Control Input Range	Running Time	Built-in Feedback	List Price
P-10001	A01	2-10 VDC	150 seconds	2-10 VDC	No Charge
P-10002	A02	0-10 VDC	150 seconds	0-10 VDC	No Charge
P-10028	A28	0-10 VDC	100 seconds	0-10 VDC	No Charge
P-10063	A63	0.5-4.5 VDC	150 seconds	0.5-4.5 VDC	No Charge
P-10064	A64	5.5-10 VDC	150 seconds	5.5-10 VDC	No Charge
P-20002	W02	0.02-5 seconds PWM	150 seconds	2-10 VDC	No Charge
P-20003	W03	0.10-25.5 seconds PWM	150 seconds	2-10 VDC	No Charge
P-30001	F01	Floating Point	150 seconds	2-10 VDC	No Charge
P-40002	J02	On/Off	150 seconds	2-10 VDC	No Charge

Other configurations carry a $34.00 list price.

067001 - 04/13 - Subject to change. © Belimo Aircontrols (USA), Inc.

F6 HD Series Butterfly Valve, Non-Spring Return Actuators

With NEMA 4X Industrial Actuator - 2-Way, Full Rated Disc

BELIMO

Valve Specifications	
Service	chilled, hot water, 60% glycol
Flow characteristic	modified equal percentage (F6...HD)
Controllable flow range	82°
Sizes	2", 2½", 3", 4", 5", 6", 8", 10", 12"
End fitting	for use with ANSI 125/150 flanges
Materials:	
Body	ductile iron, ASTM A536
Body finish	epoxy powder coat
Disc	304 stainless steel
Shaft	416 stainless steel
Seat	EPDM standard
O-ring	EPDM
Bushing	RPTFE
Media temperature range	-22°F to +248°F [-30°C to +120°C]
Body pressure rating	ASME/ANSI Class 125
Close-off pressure	200 psi
Rangeability	10:1 (for 30° to 70° range)
Maximum velocity	12 FPS



F6 SY...

2 YEAR WARRANTY

F6HD 2-way Butterfly Valve with NEMA 4X Industrial Actuators

ACTUATOR PART #						SY2-24, SY2-110, SY2-220	SY2-24MFT, SY2-120MFT, SY2-230MFT	SY3-24, SY3-110, SY3-220	SY3-24MFT, SY3-120MFT, SY3-230MFT	SY4-24, SY4-110, SY4-220	SY4-24MFT, SY4-120MFT, SY4-230MFT
Control type						On/Off, Floating Point	Proportional/MFT	On/Off, Floating Point	Proportional/MFT	On/Off, Floating Point	Proportional/MFT
Manual override						•	•	•	•	•	•
Running time						15 seconds	15, 17, 17 seconds	22 seconds	22, 26, 26 seconds	16 seconds	16, 18, 18 seconds
ELECTRICAL CONNECTION:											
Two (2) ½" conduit fittings						•	•	•	•	•	•
Covered terminal strip						•	•	•	•	•	•
Butterfly Valve Model #	**C_V 90°**	**C_V 60°**	**Valve Nominal Size Inches**	**DN/mm**	**Close-off psi**						
F650HD	115	44	2"	50	200	$2,437.00	$3,799.00				
F665HD	196	75	2½"	65	200	$2,448.00	$3,810.00				
F680HD	302	116	3"	80	200	$2,467.00	$3,850.00				
F6100HD	600	230	4"	100	200	$2,553.00	$3,923.00				
F6125HD	1022	392	5"	125	200	$3,226.00	$4,612.00				
F6150HD	1579	605	6"	150	200			$3,363.00	$4,720.00		
F6200HD	3136	1202	8"	200	200					$4,881.00	$6,283.00
F6250HD	5340	2047	10"	250	200					$5,990.00	$7,338.00
F6300HD	8250	3062	12"	300	200					$7,251.00	$8,757.00

067001 - 04/13 - Subject to change. © Belimo Aircontrols (USA), Inc.

Valve Specifications	
Service	chilled, hot water, 60% glycol
Flow characteristic	modified equal percentage (F6...HD)
Controllable flow range	82°
Sizes	14", 16", 18", 20", 24", 30"
End fitting	for use with ANSI 125/150 flanges
Materials:	
Body	ductile iron, ASTM A536
Body finish	epoxy powder coat
Disc	304 stainless steel
Shaft	416 stainless steel
Seat	EPDM standard
O-ring	EPDM
Bushing	RPTFE
Media temperature range	-22°F to +248°F [-30°C to +120°C]
Body pressure rating	ASME/ANSI Class 125
Close-off pressure	150 psi
Rangeability	10:1 (for 30° to 70° range)
Maximum velocity	12 FPS



F6 SY...

2 YEAR WARRANTY

F6HD 2-way Butterfly Valve with NEMA 4X Industrial Actuators

ACTUATOR PART #						SY5-24, SY5-110, SY5-220	SY5-24MFT, SY5-120MFT, SY5-230MFT	SY6-110, SY6-220	SY6-120MFT, SY6-230MFT	SY8-110, SY8-220	SY8-120MFT, SY8-230MFT
Control type						On/Off, Floating Point	Proportional/MFT	On/Off, Floating Point	Proportional/MFT	On/Off, Floating Point	Proportional/MFT
Manual override						•	•	•	•	•	•
Running time						22 seconds	22, 25, 25 seconds	28 seconds	31 seconds	46 seconds	55 seconds
ELECTRICAL CONNECTION:											
Two (2) ½" conduit fittings						•	•	•	•	•	•
Covered terminal strip						•	•	•	•	•	•
Butterfly Valve Model #	**C_V 90°**	**C_V 60°**	**Valve Nominal Size Inches**	**DN/mm**	**Close-off psi**						
F6350HD	11917	4568	14"	350	150	$7,959.00	$10,813.00				
F6400HD	16388	6282	16"	400	150			$10,910.00	$12,137.00		
F6450HD	21705	8320	18"	450	150					$13,414.00	$14,917.00
F6500HD	27908	10698	20"	500	150					$16,205.00	$18,043.00

ACTUATOR PART #						SY11-110, SY11-220	SY11-120MFT, SY11-230MFT	SY12-110, SY12-220	SY12-120MFT, SY12-230MFT
Control type						On/Off, Floating Point	Proportional/MFT	On/Off, Floating Point	Proportional/MFT
Manual override						•	•	•	•
Running time						58 seconds	70 seconds	58 seconds	70 seconds
ELECTRICAL CONNECTION:									
Two (2) ½" conduit fittings						•	•	•	•
Covered terminal strip						•	•	•	•
Butterfly Valve Model #	**C_V 90°**	**C_V 60°**	**Valve Nominal Size Inches**	**DN/mm**	**Close-off psi**				
F6600HD	43116	16528	24"	600	150	$26,773.00	$29,187.00		
F6750HD	73426	28146	30"	750	150			$44,067.00	$44,868.00

SY MULTI-FUNCTION TECHNOLOGY

Description	P-CODE	Control Input Range	Built-in Feedback	Loss of Signal	Running Time	List Price
MFT	ACE	2-10 VDC	2-10 VDC	stop	actuator(s) constant	No Charge
MFT	ACF	0.5-10 VDC	0.5-10 VDC	stop	actuator(s) constant	No Charge
MFT	ACG	4-20mA	4-20mA	stop	actuator(s) constant	No Charge
MFT	ACH	4-20mA	2-10 VDC	stop	actuator(s) constant	No Charge
MFT	W3E	0.02-5.00 seconds PWM*	2-10 VDC	stop	actuator(s) constant	No Charge
MFT	ACJ	2-10 VDC	2-10 VDC	open	actuator(s) constant	No Charge
MFT	ACK	0.5-10 VDC	0.5-10 VDC	open	actuator(s) constant	No Charge
MFT	ACL	4-20mA	4-20mA	open	actuator(s) constant	No Charge
MFT	ACM	4-20mA	2-10 VDC	open	actuator(s) constant	No Charge
MFT	ACN	2-10 VDC	2-10 VDC	close	actuator(s) constant	No Charge
MFT	ACP	0.5-10 VDC	0.5-10 VDC	close	actuator(s) constant	No Charge
MFT	ACR	4-20mA	4-20mA	close	actuator(s) constant	No Charge
MFT	ACS	4-20mA	2-10 VDC	close	actuator(s) constant	No Charge

Other configurations carry a $34.00 list price.
*Available only on -24MFT actuators.

067001 - 04/13 - Subject to change. © Belimo Aircontrols (USA), Inc.

F7 HD Series Butterfly Valve, Non-Spring Return Actuators

With NEMA 4X Industrial Actuator - 3-Way. Full Rated Disc

BELIMO

Valve Specifications	
Service	chilled, hot water, 60% glycol
Flow characteristic	modified linear (F7...HD)
Controllable flow range	82°
Sizes	2", 2½", 3", 4", 5", 6", 8", 10", 12", 14"
End fitting	for use with ANSI 125/150 flanges
Materials:	
Body	ductile iron, ASTM A536
Body finish	epoxy powder coat
Disc	304 stainless steel
Shaft	416 stainless steel
Seat	EPDM standard
O-ring	EPDM
Bushing	RPTFE
Media temperature range	-22°F to +248°F [-30°C to +120°C]
Body pressure rating	ASME/ANSI Class 125
Close-off pressure	200 psi (2"-12") and 150 psi (14")
Rangeability	10:1 (for 30° to 70° range)
Maximum velocity	12 FPS



F7 SY...

2 YEAR WARRANTY

F7HD 3-way Butterfly Valve with NEMA 4X Industrial Actuators

ACTUATOR PART #						SY2-24, SY2-110, SY2-220	SY2-24MFT, SY2-120MFT, SY2-230MFT	SY3-24, SY3-110, SY3-220	SY3-24MFT, SY3-120MFT, SY3-230MFT	SY4-24, SY4-110, SY4-220
Control type						On/Off, Floating Point	Proportional/MFT	On/Off, Floating Point	Proportional/MFT	On/Off, Floating Point
Manual override						•	•	•	•	•
Running time						15 seconds	15, 17, 17 seconds	22 seconds	22, 26, 26 seconds	16 seconds
ELECTRICAL CONNECTION:										
Two (2) ½" conduit fittings						•	•	•	•	•
Covered terminal strip						•	•	•	•	•
Butterfly Valve Model #	**C_V 90°**	**C_V 60°**	**Valve Nominal Size Inches**	**DN/mm**	**Close-off psi**					
F750HD	115	44	2"	50	200	$3,817.00	$5,196.00			
F765HD	196	75	2½"	65	200	$3,929.00	$5,265.00			
F780HD	302	116	3"	80	200	$3,978.00	$5,340.00			
F7100HD	600	230	4"	100	200	$4,875.00	$6,174.00			
F7125HD	1022	392	5"	125	200			$5,111.00	$6,543.00	
F7150HD	1579	605	6"	150	200			$5,892.00	$7,195.00	
F7200HD	3136	1202	8"	200	200					$7,402.00
F7250HD	5340	2047	10"	250	200					$9,949.00

ACTUATOR PART #						SY4-24MFT, SY4-120MFT, SY4-230MFT	SY5-24, SY5-110, SY5-220	SY5-24MFT, SY5-120MFT, SY5-230MFT	SY6-110, SY6-220	SY6-120MFT, SY6-230MFT
Control type						Proportional/MFT	On/Off, Floating Point	Proportional/MFT	On/Off, Floating Point	Proportional/MFT
Manual override						•	•	•	•	•
Running time						16, 18, 18 seconds	22 seconds	22, 25, 25 seconds	28 seconds	31 seconds
ELECTRICAL CONNECTION:										
Two (2) ½" conduit fittings						•	•	•	•	•
Covered terminal strip						•	•	•	•	•
Butterfly Valve Model #	**C_V 90°**	**C_V 60°**	**Valve Nominal Size Inches**	**DN/mm**	**Close-off psi**					
F7200HD	3136	1202	8"	200	200	$8,846.00				
F7250HD	5340	2047	10"	250	200	$11,263.00				
F7300HD	8250	3062	12"	300	200		$11,804.00	$13,074.00		
F7350HD	11917	3062	14"	350	150				$19,260.00	$20,476.00

067001 - 04/13 - Subject to change. © Belimo Aircontrols (USA), Inc.

Valve Specifications	
Service	chilled, hot water, 60% glycol
Flow characteristic	modified linear (F7...HD)
Controllable flow range	82°
Sizes	16", 18", 20", 24"
End fitting	for use with ANSI 125/150 flanges
Materials:	
Body	ductile iron, ASTM A536
Body finish	epoxy powder coat
Disc	304 stainless steel
Shaft	416 stainless steel
Seat	EPDM standard
O-ring	EPDM
Bushing	RPTFE
Media temperature range	-22°F to +248°F [-30°C to +120°C]
Body pressure rating	ASME/ANSI Class 125
Close-off pressure	150 psi
Rangeability	10:1 (for 30° to 70° range)
Maximum velocity	12 FPS



F7 SY...

2 YEAR WARRANTY

F7HD 3-way Butterfly Valve with NEMA 4X Industrial Actuators

ACTUATOR PART #						SY7-110, SY7-220	SY7-120MFT, SY7-230MFT	SY8-110, SY8-220	SY8-120MFT, SY8-230MFT	SY9-110, SY9-220	SY9-120MFT, SY9-230MFT	SY12-110, SY12-220	SY12-120MFT, SY12-230MFT
Control type						On/Off, Floating Point	Proportional/ MFT	On/Off, Floating Point	Proportional/ MFT	On/Off, Floating Point	Proportional/ MFT	On/Off, Floating Point	Proportional/ MFT
Manual override						•	•	•	•	•	•	•	•
Running time						46 seconds	55 seconds	46 seconds	55 seconds	58 seconds	70 seconds	58 seconds	70 seconds
ELECTRICAL CONNECTION:													
Two (2) ½" conduit fittings						•	•	•	•	•	•	•	•
Covered terminal strip						•	•	•	•	•	•	•	•
Butterfly Valve Model #	**C_V 90°**	**C_V 60°**	**Valve Nominal Size Inches**	**DN/mm**	**Close-off psi**								
F7400HD	16388	6282	16"	400	150	$22,267.00	$23,290.00						
F7450HD	21705	8320	18"	450	150			$34,334.00	$37,542.00				
F7500HD	27908	10698	20"	500	150					$42,087.00	$45,257.00		
F7600HD	43116	16528	24"	600	150							$52,939.00	$56,139.00

SY MULTI-FUNCTION TECHNOLOGY

Description	P-CODE	Control Input Range	Built-in Feedback	Loss of Signal	Running Time	List Price
MFT	ACE	2-10 VDC	2-10 VDC	stop	actuator(s) constant	No Charge
MFT	ACF	0.5-10 VDC	0.5-10 VDC	stop	actuator(s) constant	No Charge
MFT	ACG	4-20mA	4-20mA	stop	actuator(s) constant	No Charge
MFT	ACH	4-20mA	2-10 VDC	stop	actuator(s) constant	No Charge
MFT	W3E	0.02-5.00 seconds PWM*	2-10 VDC	stop	actuator(s) constant	No Charge
MFT	ACJ	2-10 VDC	2-10 VDC	open	actuator(s) constant	No Charge
MFT	ACK	0.5-10 VDC	0.5-10 VDC	open	actuator(s) constant	No Charge
MFT	ACL	4-20mA	4-20mA	open	actuator(s) constant	No Charge
MFT	ACM	4-20mA	2-10 VDC	open	actuator(s) constant	No Charge
MFT	ACN	2-10 VDC	2-10 VDC	close	actuator(s) constant	No Charge
MFT	ACP	0.5-10 VDC	0.5-10 VDC	close	actuator(s) constant	No Charge
MFT	ACR	4-20mA	4-20mA	close	actuator(s) constant	No Charge
MFT	ACS	4-20mA	2-10 VDC	close	actuator(s) constant	No Charge

Other configurations carry a $34.00 list price.

*Available only on -24MFT actuators.

067001 - 04/13 - Subject to change. © Belimo Aircontrols (USA), Inc.

F6/F7 Grooved Series Butterfly Valve, Non-Spring Return Actuators

2-Way, 3-Way, Full Rated Disc

BELIMO

Valve Specifications

Service	chilled, hot water, 60% glycol		
Flow characteristic	modified equal percentage (F6...VIC) modified linear (F7...VIC)		
Sizes	2", 2½", 3", 4"		
End fitting	grooved ANSI/AWWA (C606)		
Materials:			
Body	ductile iron ASTM A536, grade 65-45-12	Shaft	416 stainless steel
Body finish	black alkyd enamel	Seat	EPDM
Disc	electrolysis nickel coated ductile iron	Bearing	fiberglass with TFE lining
Media temperature range	-20°F to +250°F [-28°C to +121°C]		
Body pressure rating	300 psi		
Close-off pressure	200 psi		
Rangeability	10:1 (for 30° to 70° range)		
Maximum velocity	20 FPS		



F6 GM...



F7 2*GM...

2 YEAR WARRANTY

F6VIC 2-way Butterfly Valve with Non-Spring Return Actuators

ACTUATOR PART #						AMB24-3-X1	AMX24-MFT-X1	GMB24-3-X1	GMX24-MFT-X1	2*GMB24-3-X1	2*GMX24-MFT-X1
Control type						On/Off, Floating Point	Proportional/MFT	On/Off, Floating Point	Proportional/MFT	On/Off, Floating Point	Proportional/MFT
Manual override						•	•	•	•	•	•
Running time						90 seconds	150 seconds	150 seconds	150 seconds	150 seconds	150 seconds
Noise level						<45 dB(A)	<45 dB(A)	<45 dB(A)	<45 dB(A)	<45 dB(A)	<45 dB(A)
ELECTRICAL CONNECTION:											
3 ft cable, ½" conduit fitting						•	•	•	•	•	•
Butterfly Valve Model #	**C_V 90°**	**C_V 60°**	**Valve Nominal Size Inches**	**DN/mm**	**Close-off psi**						
F650VIC	115	36	2"	50	200	$1,470.00	$1,646.00				
F665VIC	260	80	2½"	65	50	$1,780.00	$1,953.00				
F665VIC	260	80	2½"	65	200			$1,931.00	$2,024.00		
F680VIC	440	140	3"	80	200			$2,023.00	$2,117.00		
F6100VIC	820	250	4"	100	200					$4,212.00	$4,398.00

F7VIC 3-way Butterfly Valve with Non-Spring Return Actuators

ACTUATOR PART #						AMB24-3-X1	AMX24-MFT-X1	GMB24-3-X1	GMX24-MFT-X1	2*GMB24-3-X1	2*GMX24-MFT-X1
Control type						On/Off, Floating Point	Proportional/MFT	On/Off, Floating Point	Proportional/MFT	On/Off, Floating Point	Proportional/MFT
Manual override						•	•	•	•	•	•
Running time						90 seconds	150 seconds	150 seconds	150 seconds	150 seconds	150 seconds
Noise level						<45 dB(A)	<45 dB(A)	<45 dB(A)	<45 dB(A)	<45 dB(A)	<45 dB(A)
ELECTRICAL CONNECTION:											
3 ft cable, ½" conduit fitting						•	•	•	•	•	•
Butterfly Valve Model #	**C_V 90°**	**C_V 60°**	**Valve Nominal Size Inches**	**DN/mm**	**Close-off psi**						
F750VIC	115	36	2"	50	50	$3,369.00	$3,542.00				
F750VIC	115	36	2"	50	200			$3,528.00	$3,621.00		
F765VIC	260	80	2½"	65	50			$4,172.00	$4,263.00		
F765VIC	260	80	2½"	65	200					$4,904.00	$5,081.00
F780VIC	440	140	3"	80	50					$5,178.00	$5,370.00

MULTI-FUNCTION TECHNOLOGY

Description	P-CODE	Control Input Range	Running Time	Built-in Feedback	List Price
P-10001	A01	2-10 VDC	150 seconds	2-10 VDC	No Charge
P-10002	A02	0-10 VDC	150 seconds	0-10 VDC	No Charge
P-10028	A28	0-10 VDC	100 seconds	0-10 VDC	No Charge
P-10063	A63	0.5-4.5 VDC	150 seconds	0.5-4.5 VDC	No Charge
P-10064	A64	5.5-10 VDC	150 seconds	5.5-10 VDC	No Charge
P-20002	W02	0.02-5 seconds PWM	150 seconds	2-10 VDC	No Charge
P-20003	W03	0.10-25.5 seconds PWM	150 seconds	2-10 VDC	No Charge
P-30001	F01	Floating Point	150 seconds	2-10 VDC	No Charge
P-40002	J02	On/Off	150 seconds	2-10 VDC	No Charge

Other configurations carry a $34.00 list price.

067001 - 04/13 - Subject to change. © Belimo Aircontrols (USA), Inc.

Valve Specifications

Service	chilled, hot water, 60% glycol		
Flow characteristic	modified equal percentage (F6...VIC) modified linear (F7...VIC)		
Sizes	2", 2½", 3", 4"		
End fitting	grooved ANSI/AWWA (C606)		
Materials:			
Body	ductile iron ASTM A536, grade 65-45-12	Shaft	416 stainless steel
Body finish	black alkyd enamel	Seat	EPDM
Disc	electrolysis nickel coated ductile iron	Bearings	fiberglass with TFE lining
Media temperature range	-20°F to +250°F [-28°C to +121°C]		
Body pressure rating	300 psi at -30°F to +250°F		
Close-off pressure	200 psi		
Maximum velocity	20 FPS		



2*AF...

F6VIC 2-way Butterfly Valve with Spring Return Actuators

ACTUATOR PART #						AFBUP-X1	AFX24-MFT-X1	2*AFBUP-X1	2*AFX24-MFT-X1	2*GKX24-MFT-X1
Control type						On/Off	Proportional/MFT	On/Off	Proportional/MFT	Proportional/MFT
Manual override						•	•	•	•	•
Running time					Motor	75 seconds	150 seconds	75 seconds	150 seconds	150 seconds
					Spring	<20 seconds	<20 seconds	<20 seconds	<20 seconds	
					Fail-Safe					35 seconds
Noise level						<45 dB(A)	<45 dB(A)	<45 dB(A)	<45 dB(A)	<45 dB(A)
ELECTRICAL CONNECTION:										
3 ft cable, ½" conduit fitting						•	•	•	•	•
Butterfly Valve Model #	**C_V 90°**	**C_V 60°**	**Valve Nominal Size Inches**	**DN/mm**	**Close-off psi**					
F650VIC	115	36	2"	50	200	$1,672.00	$1,771.00			
F665VIC	260	80	2½"	65	50	$2,275.00	$2,395.00			
F665VIC	260	80	2½"	65	200			$2,607.00	$2,800.00	
F680VIC	440	140	3"	80	50			$2,766.00	$2,946.00	
F6100VIC	820	250	4"	100	200					$5,371.00

F7VIC 3-way Butterfly Valve with Spring Return Actuators

ACTUATOR PART #						AFBUP-X1	AFX24-MFT-X1	2*AFBUP-X1	2*AFX24-MFT-X1
Butterfly Valve Model #	**C_V 90°**	**C_V 60°**	**Valve Nominal Size Inches**	**DN/mm**	**Close-off psi**				
F750VIC	115	36	2"	50	50	$3,533.00	$3,670.00		
F750VIC	115	36	2"	50	200			$4,987.00	$5,185.00
F765VIC	260	80	2½"	65	50			$5,040.00	$5,260.00

OPTIONS	AFBUP-S-X1	AFX24-MFT-S-X1	2*AFBUP-S-X1	2*AFX24-MFT-S-X1
120 VAC power supply			•	•
Built-in auxiliary switch	•	•		•
F6VIC 2-way Butterfly Valve with Spring Return				
F650VIC	$1,762.00	$1,842.00		
F665VIC	$2,365.00	$2,509.00	$2,697.00	$2,926.00
F680VIC			$2,856.00	$3,031.00
F7VIC 3-way Butterfly Valve with Spring Return				
F750VIC	$3,624.00	$4,206.00	$5,077.00	$5,350.00
F765VIC			$5,130.00	$5,425.00

067001 - 04/13 - Subject to change. © Belimo Aircontrols (USA), Inc.

F6 Grooved Series Butterfly Valve, Non-Spring Return Actuators

With NEMA 4X Industrial Actuator - 2-Way, Full Rated Disc

BELIMO

Valve Specifications

Service	chilled, hot water, 60% glycol		
Flow characteristic	modified equal percentage (F6...VIC)		
Sizes	2", 2½", 3", 4", 5", 6", 8", 10", 12"		
End fitting	grooved ANSI/AWWA (C606)		
Materials:			
Body	ductile iron ASTM A536, grade 65-45-12	Shaft	416 stainless steel
Body finish	black alkyd enamel	Seat	EPDM
Disc	electrolysis nickel coated ductile iron	Bearings	fiberglass with TFE lining
Media temperature range	-20°F to +250°F [-28°C to +121°C]		
Body pressure rating	300 psi at -30°F to +250°F		
Close-off pressure	200 psi		
Maximum velocity	20 FPS		



F6 SY...

2 YEAR WARRANTY

F6VIC 2-way Butterfly Valve with NEMA 4X Industrial Actuators

ACTUATOR PART #						SY1-24, SY1-110, SY1-220	SY1-24P, SY1-110P, SY1-220P	SY2-24, SY2-110, SY2-220	SY2-24MFT, SY2-120MFT, SY2-230MFT	SY3-24, SY3-110, SY3-220	SY3-24MFT, SY3-120MFT, SY3-230MFT	SY4-24, SY4-110, SY4-220	SY4-24MFT, SY4-120MFT, SY4-230MFT
Control type						On/Off, Floating Point	Proportional	On/Off, Floating Point	Proportional/ MFT	On/Off, Floating Point	Proportional/ MFT	On/Off, Floating Point	Proportional/ MFT
Manual override						•	•	•	•	•	•	•	•
Running time						12 seconds	15, 13, 13 seconds	15 seconds	15, 17, 17 seconds	22 seconds	22, 26, 26 seconds	16 seconds	16, 18, 18 seconds
ELECTRICAL CONNECTION:													
Two (2) ½" conduit fittings						•	•	•	•	•	•	•	•
Covered terminal strip						•	•	•	•	•	•	•	•
Butterfly Valve Model #	**Cv 90°**	**Cv 60°**	**Valve Nominal Size Inches**	**DN/mm**	**Close-off psi**								
F650VIC	115	36	2"	50	200	$2,701.00	$4,143.00						
F665VIC	260	80	2½"	65	200	$2,835.00	$4,377.00						
F680VIC	440	140	3"	80	50	$2,952.00	$4,279.00						
F680VIC	440	140	3"	80	200			$3,111.00	$4,472.00				
F6100VIC	820	250	4"	100	200			$3,395.00	$4,820.00				
F6125VIC	1200	370	5"	125	200			$3,616.00	$5,451.00				
F6150VIC	1800	560	6"	150	50			$4,920.00	$5,963.00				
F6150VIC	1800	560	6"	150	200					$4,921.00	$7,892.00		
F6200VIC	3400	1050	8"	200	200							$6,479.00	$7,892.00

ACTUATOR PART #						SY5-24, SY5-110, SY5-220	SY5-24MFT, SY5-120MFT, SY5-230MFT	SY6-110, SY6-220	SY6-120MFT, SY6-230MFT
Control type						On/Off, Floating Point	Proportional/MFT	On/Off, Floating Point	Proportional/MFT
Manual override						•	•	•	•
Running time						22 seconds	22, 25, 25 seconds	28 seconds	31 seconds
ELECTRICAL CONNECTION:									
Two (2) ½" conduit fittings						•	•	•	•
Covered terminal strip						•	•	•	•
Butterfly Valve Model #	**Cv 90°**	**Cv 60°**	**Valve Nominal Size Inches**	**DN/mm**	**Close-off psi**				
F6250VIC	5800	1800	10"	250	200	$8,270.00	$9,262.00		
F6300VIC	9000	2790	12"	300	200			$9,174.00	$10,173.00

SY MULTI-FUNCTION TECHNOLOGY

Description	P-CODE	Control Input Range	Built-in Feedback	Loss of Signal	Running Time	List Price
MFT	ACE	2-10 VDC	2-10 VDC	stop	actuator(s) constant	No Charge
MFT	ACF	0.5-10 VDC	0.5-10 VDC	stop	actuator(s) constant	No Charge
MFT	ACG	4-20mA	4-20mA	stop	actuator(s) constant	No Charge
MFT	ACH	4-20mA	2-10 VDC	stop	actuator(s) constant	No Charge
MFT	W3E	0.02-5.00 seconds PWM*	2-10 VDC	stop	actuator(s) constant	No Charge
MFT	ACJ	2-10 VDC	2-10 VDC	open	actuator(s) constant	No Charge
MFT	ACK	0.5-10 VDC	0.5-10 VDC	open	actuator(s) constant	No Charge
MFT	ACL	4-20mA	4-20mA	open	actuator(s) constant	No Charge
MFT	ACM	4-20mA	2-10 VDC	open	actuator(s) constant	No Charge
MFT	ACN	2-10 VDC	2-10 VDC	close	actuator(s) constant	No Charge
MFT	ACP	0.5-10 VDC	0.5-10 VDC	close	actuator(s) constant	No Charge
MFT	ACR	4-20mA	4-20mA	close	actuator(s) constant	No Charge
MFT	ACS	4-20mA	2-10 VDC	close	actuator(s) constant	No Charge

*Available only on -24MFT actuators.
Other configurations carry a $34.00 list price.

067001 - 04/13 - Subject to change. © Belimo Aircontrols (USA), Inc.

Valve Specifications

Service	chilled, hot water, 60% glycol		
Flow characteristic	modified linear (F7...VIC)		
Sizes	2", 2½", 3", 4", 5", 6", 8", 10", 12"		
End fitting	grooved ANSI/AWWA (C606)		
Materials:			
Body	ductile iron ASTM A536, grade 65-45-12	Shaft	416 stainless steel
Body finish	black alkyd enamel	Seat	EPDM
Disc	electrolysis nickel coated ductile iron	Bearings	fiberglass with TFE lining
Media temperature range	-20°F to +250°F [-28°C to +121°C]		
Body pressure rating	300 psi at -30°F to +250°F		
Close-off pressure	200 psi		
Maximum velocity	20 FPS		



F7 SY...

2 YEAR WARRANTY

F7VIC 3-way Butterfly Valve with NEMA 4X Industrial Actuators

ACTUATOR PART #						SY1-24, SY1-110, SY1-220	SY1-24P, SY1-110P, SY1-220P	SY2-24, SY2-110, SY2-220	SY2-24MFT, SY2-120MFT, SY2-230MFT	SY3-24, SY3-110, SY3-220	SY3-24MFT, SY3-120MFT, SY3-230MFT	SY4-24, SY4-110	SY4-24MFT, SY4-120MFT, SY4-230MFT
Control type						On/Off, Floating Point	Proportional/ MFT	On/Off, Floating Point	Proportional/ MFT	On/Off, Floating Point	Proportional/ MFT	On/Off	Proportional/ MFT
Manual override						•	•	•	•	•	•	•	•
Running time						12 seconds	12 seconds	15 seconds	15 seconds	22 seconds	22 seconds	16 seconds	16 seconds
ELECTRICAL CONNECTION:													
Two (2) ½" conduit fittings						•	•	•	•	•	•	•	•
Covered terminal strip						•	•	•	•	•	•	•	•
Butterfly Valve Model #	**C_V 90°**	**C_V 60°**	**Valve Nominal Size Inches**	**DN/mm**	**Close-off psi**								
F750VIC	115	36	2"	50	200	$4,287.00	$5,895.00						
F765VIC	260	80	2½"	65	50	$5,451.00	$6,980.00						
F765VIC	260	80	2½"	65	200			$4,963.00	$6,404.00				
F780VIC	440	140	3"	80	200			$5,276.00	$6,711.00				
F7100VIC	820	250	4"	100	200			$5,920.00	$7,354.00				
F7125VIC	1200	370	5"	125	200					$9,318.00	$10,446.00		
F7150VIC	1800	560	6"	150	50					$9,992.00	$11,637.00		
F7150VIC	1800	560	6"	150	200							$10,281.00	$11,810.00
F7200VIC	3400	1050	8"	200	200							$14,083.00	$15,840.00

ACTUATOR PART #						SY6-120MFT, SY6-230MFT	SY6-110, SY6-220	SY7-120MFT, SY7-230MFT	SY7-110, SY7-220
Control type						Proportional/MFT	On/Off, Floating Point	Proportional/MFT	On/Off, Floating Point
Manual override						•	•	•	•
Running time						31 seconds	28 seconds	55 seconds	46 seconds
ELECTRICAL CONNECTION:									
Two (2) ½" conduit fittings						•	•	•	•
Covered terminal strip						•	•	•	•
Butterfly Valve Model #	**C_V 90°**	**C_V 60°**	**Valve Nominal Size Inches**	**DN/mm**	**Close-off psi**				
F7250VIC	5800	1800	10"	250	50	$22,523.00	$20,665.00		
F7250VIC	5800	1800	10"	250	200			$22,840.00	$20,902.00
F7300VIC	9000	2790	12"	300	200			$26,357.00	$24,649.00

067001 - 04/13 - Subject to change. © Belimo Aircontrols (USA), Inc.

F6/F7 ANSI Class 150, Non-Spring Return Actuators

2-Way, 3-Way, Reinforced Teflon® Seat, 316 Stainless Steel Disc

BELIMO

Valve Specifications

Service	chilled, hot water, 60% glycol, steam to 50 psi		
Flow characteristic	modified equal percentage (F6…150SHP) modified linear (F7…150SHP)		
Sizes	2", 2½", 3", 4"		
End fitting	ANSI Class 125/150 flange		
Materials:			
Body	Carbon steel full lug	Seats	RTFE
Disc	316 stainless steel	Gland Seal	TFE
Shaft	17-4 PH stainless	Bushings	glass backed PTFE
Flange	for use with ANSI Class 125/150 Flanges		
Media temperature range	-20°F to +400°F [-30°C to +204°C]		
Body pressure rating	ANSI Class 150		
Close-off pressure	285 psi		
Rangeability	100:1 (for 30° to 70° range)		
Maximum velocity	32 FPS		



F6 GM...



F7 2*GM...

2 YEAR WARRANTY

F6…150SHP 2-way Butterfly Valve with Non-Spring Return Actuators

ACTUATOR PART #						GMB24-3-X1	GMX24-MFT-X1	2*GMB24-3-X1	2*GMX24-MFT-X1
Control type						On/Off, Floating Point	Proportional/MFT	On/Off, Floating Point	Proportional/MFT
Manual override						•	•	•	•
Running time						150 seconds	150 seconds	150 seconds	150 seconds
Noise level						<45 dB(A)	<45 dB(A)	<45 dB(A)	<45 dB(A)
ELECTRICAL CONNECTION:									
3 ft cable, ½" conduit fitting						•	•	•	•
Butterfly Valve Model #	**Cv 90°**	**Cv 60°**	**Valve Nominal Size Inches**	**DN/mm**	**Close-off psi**				
F650-150SHP	102	56	2"	50	285	$3,019.00	$3,136.00		
F665-150SHP	146	80	2½"	65	285	$3,036.00	$3,153.00		
F680-150SHP	228	125	3"	80	285	$3,054.00	$3,173.00		
F6100-150SHP	451	248	4"	100	150	$3,694.00	$3,811.00		
F6100-150SHP	451	248	4"	100	285			$3,923.00	$4,271.00

F7…150SHP 3-way Butterfly Valve with Non-Spring Return Actuators

ACTUATOR PART #						GMB24-3-X1	GMX24-MFT-X1	2*GMB24-3-X1	2*GMX24-MFT-X1
Butterfly Valve Model #	**Cv 90°**	**Cv 60°**	**Valve Nominal Size Inches**	**DN/mm**	**Close-off psi**				
F750-150SHP	102	56	2"	50	150	$6,102.00	$6,213.00		
F765-150SHP	146	80	2½"	65	150	$6,260.00	$6,370.00		
F780-150SHP	228	125	3"	80	150	$6,270.00	$6,381.00		
F750-150SHP	102	56	2"	50	285			$6,434.00	$6,663.00
F765-150SHP	146	80	2½"	65	285			$6,592.00	$6,822.00
F780-150SHP	228	125	3"	80	285			$6,629.00	$6,862.00

MULTI-FUNCTION TECHNOLOGY

Description	P-CODE	Control Input Range	Running Time	Built-in Feedback	List Price
P-10001	A01	2-10 VDC	150 seconds	2-10 VDC	No Charge
P-10002	A02	0-10 VDC	150 seconds	0-10 VDC	No Charge
P-10028	A28	0-10 VDC	100 seconds	0-10 VDC	No Charge
P-10063	A63	0.5-4.5 VDC	150 seconds	0.5-4.5 VDC	No Charge
P-10064	A64	5.5-10 VDC	150 seconds	5.5-10 VDC	No Charge
P-20002	W02	0.02-5.00 seconds PWM	150 seconds	2-10 VDC	No Charge
P-20003	W03	0.10-25.5 seconds PWM	150 seconds	2-10 VDC	No Charge
P-30001	F01	Floating Point	150 seconds	2-10 VDC	No Charge
P-40002	J02	On/Off	150 seconds	2-10 VDC	No Charge

Other configurations carry a $34.00 list price.

067001 - 04/13 - Subject to change. © Belimo Aircontrols (USA), Inc.

Valve Specifications

Service	chilled, hot water, 60% glycol, steam to 50 psi		
Flow characteristic	modified equal percentage (F6…150SHP) modified linear (F7…150SHP)		
Sizes	2", 2½", 3", 4"		
End fitting	ANSI Class 125/150 flange		
Materials:			
Body	Carbon steel full lug	Seats	RTFE
Disc	316 stainless steel	Gland Seal	TFE
Shaft	17-4 PH stainless	Bushings	glass backed PTFE
Flange	for use with ANSI Class 125/150 Flanges		
Media temperature range	-20°F to +400°F [-30°C to +204°C]		
Body pressure rating	ANSI Class 150		
Close-off pressure	285 psi		
Rangeability	100:1 (for 30° to 70° range)		
Maximum velocity	32 FPS		



F6 2*AFX...

2 YEAR WARRANTY

F6 ANSI Class 150 2-way Butterfly Valve with Spring Return and Electronic Fail-Safe Actuators

ACTUATOR PART #						2*AFBUP-X1	2*AFX24-MFT-X1	GKX24-MFT-X1	2*GKX24-MFT-X1
Control type						On/Off	Proportional/MFT	Proportional/MFT	Proportional/MFT
Manual override						•	•	•	•
Running time					Motor	75 seconds	150 seconds	150 seconds	150 seconds
					Spring	<20 seconds	<20 seconds		
					Fail-Safe			35 seconds	35 seconds
Noise level						<45 dB(A)	<45 dB(A)	<45 dB(A)	<45 dB(A)
ELECTRICAL CONNECTION:									
3 ft cable, ½" conduit fitting						•	•	•	•
Butterfly Valve Model #	**Cv 90°**	**Cv 60°**	**Valve Nominal Size Inches**	**DN/mm**	**Close-off psi**				
F650-150SHP	102	56	2"	50	285	$3,387.00	$3,509.00		
F665-150SHP	146	80	2½"	65	285	$3,404.00	$3,529.00	$3,980.00	
F680-150SHP	228	125	3"	80	285	$3,425.00	$3,546.00	$4,086.00	
F6100-150SHP	451	248	4"	100	150	$4,062.00	$4,183.00	$4,673.00	
F6100-150SHP	451	248	4"	100	285				$5,932.00

F7…150SHP 3-way Butterfly Valve with Electronic Fail-Safe Actuators

ACTUATOR PART #						GKB24-3-X1	GKX24-MFT-X1	2*GKX24-MFT-X1
Butterfly Valve Model #	**Cv 90°**	**Cv 60°**	**Valve Nominal Size Inches**	**DN/mm**	**Close-off psi**			
F750-150SHP	102	56	2"	50	150	$6,745.00	$7,043.00	
F765-150SHP	146	80	2½"	65	150	$6,901.00	$7,200.00	
F780-150SHP	228	125	3"	80	150	$6,912.00	$7,211.00	
F750-150SHP	102	56	2"	50	285			$8,323.00
F765-150SHP	146	80	2½"	65	285			$8,482.00
F780-150SHP	228	125	3"	80	285			$8,522.00

MULTI-FUNCTION TECHNOLOGY

Description	P-CODE	Control Input Range	Running Time	Built-in Feedback	List Price
P-10001	A01	2-10 VDC	150 seconds	2-10 VDC	No Charge
P-10002	A02	0-10 VDC	150 seconds	0-10 VDC	No Charge
P-10028	A28	0-10 VDC	100 seconds	0-10 VDC	No Charge
P-10063	A63	0.5-4.5 VDC	150 seconds	0.5-4.5 VDC	No Charge
P-10064	A64	5.5-10 VDC	150 seconds	5.5-10 VDC	No Charge
P-20002	W02	0.02-5 seconds PWM	150 seconds	2-10 VDC	No Charge
P-20003	W03	0.10-25.5 seconds PWM	150 seconds	2-10 VDC	No Charge
P-30001	F01	Floating Point	150 seconds	2-10 VDC	No Charge
P-40002	J02	On/Off	150 seconds	2-10 VDC	No Charge

Other configurations carry a $34.00 list price.

067001 - 04/13 - Subject to change. © Belimo Aircontrols (USA), Inc.

F6/F7 ANSI Class 150, Non-Spring Return Actuators

With NEMA 4 Actuator - 2-Way, 3-Way, Reinforced Teflon® Seat, 316 Stainless Steel Disc

BELIMO

Valve Specifications

Service		chilled, hot water, 60% glycol, steam to 50 psi	
Flow characteristic		modified equal percentage (F6…150SHP) modified linear (F7…150SHP)	
Sizes		2", 2½", 3", 4"	
End fitting		ANSI Class 125/150 flange	
Materials:			
Body	Carbon steel full lug	Seats	RTFE
Disc	316 stainless steel	Gland Seal	TFE
Shaft	17-4 PH stainless	Bushings	glass backed PTFE
Flange		for use with ANSI Class 125/150 Flanges	
Media temperature range		-20°F to +400°F [-30°C to +204°C]	
Body pressure rating		ANSI Class 150	
Close-off pressure		285 psi	
Rangeability		100:1 (for 30° to 70° range)	
Maximum velocity		32 FPS	



F650-150SHP+GMCB24-3-T-X1 N4

2 YEAR WARRANTY

F6…150SHP 2-way Butterfly Valve with Non-Spring Return Actuators

ACTUATOR PART #						GMCX24-3-T-X1 N4	GMX24-MFT-T-X1 N4	GMCB24-3-T-X1 N4H	GMB24-MFT-T-X1 N4H
Control type						On/Off, Floating Point	Proportional/MFT	On/Off, Floating Point	Proportional/MFT
Manual override						•	•	•	•
Running time						35 seconds	150 seconds	35 seconds	150 seconds
Noise level						<45 dB(A)	<45 dB(A)	<45 dB(A)	<45 dB(A)
ELECTRICAL CONNECTION:									
One (1) ½" conduit fitting						•	•	•	•
Covered terminal strip						•	•	•	•
Butterfly Valve Model #	**Cv 90°**	**Cv 60°**	**Valve Nominal Size Inches**	**DN/mm**	**Close-off psi**				
F650-150SHP	102	56	2"	50	285	$4,432.00	$4,558.00	$4,790.00	$4,916.00
F665-150SHP	146	80	2½"	65	285	$4,507.00	$4,626.00	$4,865.00	$4,984.00
F680-150SHP	228	125	3"	80	285	$4,614.00	$4,735.00	$4,972.00	$5,093.00
F6100-150SHP	451	248	4"	100	150	$4,782.00	$4,999.00	$5,140.00	$5,357.00

F7…150SHP 3-way Butterfly Valve with Non-Spring Actuators

ACTUATOR PART #						GMCX24-3-T-X1 N4	GMX24-MFT-T-X1 N4	2*GMCX24-3-T-X1 N4	2*GMX24-MFT-T-X1 N4	GMCB24-3-T-X1 N4H	GMB24-MFT-T-X1 N4H	2*GMCB24-3-T-X1 N4H	2*GMB24-MFT-T-X1 N4H
Butterfly Valve Model #	**Cv 90°**	**Cv 60°**	**Valve Nominal Size Inches**	**DN/mm**	**Close-off psi**								
F750-150SHP	102	56	2"	50	150	$7,424.00	$7,541.00			$7,782.00	$7,899.00		
F765-150SHP	146	80	2½"	65	150	$7,725.00	$7,846.00			$8,083.00	$8,204.00		
F780-150SHP	228	125	3"	80	150	$7,850.00	$7,976.00			$8,208.00	$8,334.00		
F750-150SHP	102	56	2"	50	285			$8,373.00	$8,613.00			$8,731.00	$8,971.00
F765-150SHP	146	80	2½"	65	285			$8,559.00	$8,808.00			$8,917.00	$9,166.00
F780-150SHP	228	125	3"	80	285			$8,852.00	$9,092.00			$9,210.00	$9,450.00
F7100-150SHP	451	248	4"	100	150			$9,029.00	$9,281.00			$9,387.00	$9,636.00

MULTI-FUNCTION TECHNOLOGY

Description	P-CODE	Control Input Range	Running Time	Built-in Feedback	List Price
P-10001	A01	2-10 VDC	150 seconds	2-10 VDC	No Charge
P-10002	A02	0-10 VDC	150 seconds	0-10 VDC	No Charge
P-10028	A28	0-10 VDC	100 seconds	0-10 VDC	No Charge
P-10063	A63	0.5-4.5 VDC	150 seconds	0.5-4.5 VDC	No Charge
P-10064	A64	5.5-10 VDC	150 seconds	5.5-10 VDC	No Charge
P-20002	W02	0.02-5.00 seconds PWM	150 seconds	2-10 VDC	No Charge
P-20003	W03	0.10-25.5 seconds PWM	150 seconds	2-10 VDC	No Charge
P-30001	F01	Floating Point	150 seconds	2-10 VDC	No Charge
P-40002	J02	On/Off	150 seconds	2-10 VDC	No Charge

Other configurations carry a $34.00 list price.

067001 - 04/13 - Subject to change. © Belimo Aircontrols (USA), Inc.

Valve Specifications

Service		chilled, hot water, 60% glycol, steam to 50 psi	
Flow characteristic		modified equal percentage (F6…150SHP)	
Sizes		2", 2½", 3", 4", 5", 6", 8", 10", 12"	
End fitting		ANSI Class 125/150 flange	
Materials:			
Body	Carbon steel full lug	Seats	RTFE
Disc	316 stainless steel	Gland Seal	TFE
Shaft	17-4 PH stainless	Bushings	glass backed PTFE
Flange		for use with ANSI Class 125/150 Flanges	
Media temperature range		-20°F to +400°F [-30°C to +204°C]	
Body pressure rating		ANSI Class 150	
Close-off pressure		285 psi	
Rangeability		100:1 (for 30° to 70° range)	
Maximum velocity		32 FPS	



F6 SY...

2 YEAR WARRANTY

F6…150SHP 2-way Butterfly Valve with NEMA 4X Industrial Style Actuators

ACTUATOR PART #						SY2-24, SY2-110, SY2-220	SY2-24MFT, SY2-120MFT, SY2-230MFT	SY3-24, SY3-110, SY3-220	SY3-24MFT, SY3-120MFT, SY3-230MFT	SY4-24, SY4-110, SY4-220	SY4-24MFT, SY4-120MFT, SY4-230MFT
Control type						On/Off, Floating Point	Proportional/ MFT	On/Off, Floating Point	Proportional/ MFT	On/Off, Floating Point	Proportional/ MFT
Manual override						•	•	•	•	•	•
Running time						15 seconds	15, 17, 17 seconds	22 seconds	22, 26, 26 seconds	16 seconds	16, 18, 18 seconds
ELECTRICAL CONNECTION:											
Two (2) ½" conduit fittings						•	•	•	•	•	•
Covered terminal strip						•	•	•	•	•	•
Butterfly Valve Model #	**C_V 90°**	**C_V 60°**	**Valve Nominal Size Inches**	**DN/mm**	**Close-off psi**						
F650-150SHP	102	56	2"	50	285	$4,786.00	$6,584.00				
F665-150SHP	146	80	2½"	65	285	$4,807.00	$6,600.00				
F680-150SHP	228	125	3"	80	285	$4,825.00	$6,621.00				
F6100-150SHP	451	248	4"	100	285	$5,463.00	$7,258.00				
F6125-150SHP	714	392	5"	125	285	$6,807.00	$8,602.00				
F6150-150SHP	1103	607	6"	150	285	$6,844.00	$8,643.00				
F6200-150SHP	2064	1135	8"	200	150			$8,254.00	$10,062.00		
F6200-150SHP	2064	1135	8"	200	285					$8,775.00	$10,853.00
F6250-150SHP	3517	1934	10"	250	285					$11,884.00	$13,962.00
F6300-150SHP	4837	2660	12"	300	150					$14,526.00	$16,607.00

SY MULTI-FUNCTION TECHNOLOGY

Description	P-CODE	Control Input Range	Built-in Feedback	Loss of Signal	Running Time	List Price
MFT	ACE	2-10 VDC	2-10 VDC	stop	actuator(s) constant	No Charge
MFT	ACF	0.5-10 VDC	0.5-10 VDC	stop	actuator(s) constant	No Charge
MFT	ACG	4-20mA	4-20mA	stop	actuator(s) constant	No Charge
MFT	ACH	4-20mA	2-10 VDC	stop	actuator(s) constant	No Charge
MFT	W3E	0.02-5.00 seconds PWM*	2-10 VDC	stop	actuator(s) constant	No Charge
MFT	ACJ	2-10 VDC	2-10 VDC	open	actuator(s) constant	No Charge
MFT	ACK	0.5-10 VDC	0.5-10 VDC	open	actuator(s) constant	No Charge
MFT	ACL	4-20mA	4-20mA	open	actuator(s) constant	No Charge
MFT	ACM	4-20mA	2-10 VDC	open	actuator(s) constant	No Charge
MFT	ACN	2-10 VDC	2-10 VDC	close	actuator(s) constant	No Charge
MFT	ACP	0.5-10 VDC	0.5-10 VDC	close	actuator(s) constant	No Charge
MFT	ACR	4-20mA	4-20mA	close	actuator(s) constant	No Charge
MFT	ACS	4-20mA	2-10 VDC	close	actuator(s) constant	No Charge

*Available only on -24MFT actuators.
Other configurations carry a $34.00 list price.

067001 - 04/13 - Subject to change. © Belimo Aircontrols (USA), Inc.

F6 ANSI Class 150, Non-Spring Return Actuators

With NEMA 4X Industrial Actuator - 2-Way, Reinforced Teflon® Seat, 316 Stainless Disc

BELIMO

Valve Specifications

Service		chilled, hot water, 60% glycol, steam to 50 psi	
Flow characteristic		modified equal percentage (F6…150SHP)	
Sizes		12”, 14”, 16”, 18”, 20”, 24”, 30”	
End fitting		ANSI Class 125/150 flange	
Materials:			
Body	Carbon steel full lug	Seats	RTFE
Disc	316 stainless steel	Gland Seal	TFE
Shaft	17-4 PH stainless	Bushings	glass backed PTFE
Flange		for use with ANSI Class 125/150 Flanges	
Media temperature range		-20°F to +400°F [-30°C to +204°C]	
Body pressure rating		ANSI Class 150	
Close-off pressure		285 psi	
Rangeability		100:1 (for 30° to 70° range)	
Maximum velocity		32 FPS	



F6 SY...

2 YEAR WARRANTY

F6…150SHP 2-way Butterfly Valve with NEMA 4X Industrial Style Actuators

ACTUATOR PART #						SY5-24, SY5-110, SY5-220	SY5-24MFT, SY5-120MFT, SY5-230MFT	SY7-110, SY7-220	SY7-120MFT, SY7-230MFT	SY8-110, SY8-220	SY8-120MFT, SY8-230MFT
Control type						On/Off, Floating Point	Proportional/ MFT	On/Off, Floating Point	Proportional/MFT	On/Off, Floating Point	Proportional/MFT
Manual override						•	•	•	•	•	•
Running time						22 seconds	22, 25, 25 seconds	46 seconds	55 seconds	46 seconds	55 seconds
ELECTRICAL CONNECTION:											
Two (2) ½” conduit fittings						•	•	•	•	•	•
Covered terminal strip						•	•	•	•	•	•
Butterfly Valve Model #	**C_V 90°**	**C_V 60°**	**Valve Nominal Size Inches**	**DN/mm**	**Close-off psi**						
F6300-150SHP	4837	2660	12”	300	285	$14,881.00	$16,951.00				
F6350-150SHP	6857	3592	14”	350	150	$18,514.00	$20,597.00				
F6350-150SHP	6857	3592	14”	350	285			$19,720.00	$21,743.00		
F6400-150SHP	9287	4865	16”	400	285			$27,336.00	$29,360.00		
F6450-150SHP	11500	3270	18”	450	150			$31,705.00	$33,731.00		
F6450-150SHP	11500	3270	18”	450	285					$33,062.00	$35,093.00
F6500-150SHP	14420	7590	20”	500	150					$40,365.00	$42,392.00

ACTUATOR PART #						SY9-110, SY9-220	SY9-120MFT, SY9-230MFT	SY10-110, SY10-220	SY10-120MFT, SY10-230MFT	SY12-110, SY12-220	SY12-120MFT, SY12-230MFT
Control type						On/Off, Floating Point	Proportional/MFT	On/Off, Floating Point	Proportional/MFT	On/Off, Floating Point	Proportional/MFT
Manual override						•	•	•	•	•	•
Running time						58 seconds	58 seconds	58 seconds	58 seconds	58 seconds	58 seconds
ELECTRICAL CONNECTION:											
Two (2) ½” conduit fittings						•	•	•	•	•	•
Covered terminal strip						•	•	•	•	•	•
Butterfly Valve Model #	**C_V 90°**	**C_V 60°**	**Valve Nominal Size Inches**	**DN/mm**	**Close-off psi**						
F6500-150SHP	14420	7590	20”	500	285	$41,666.00	$43,690.00				
F6600-150SHP	22050	11550	24”	600	150			$55,732.00	$57,760.00		
F6750-150SHP	34388	18012	30”	750	125					$96,992.00	$98,821.00

Note: Contact factory for 285 psi on valves larger than 20”.

067001 - 04/13 - Subject to change. © Belimo Aircontrols (USA), Inc.

Valve Specifications

Service		chilled, hot water, 60% glycol, steam to 50 psi	
Flow characteristic		modified linear (F7…150SHP)	
Sizes		2", 2½", 3", 4", 5", 6", 8", 10", 12", 14", 16", 18"	
End fitting		ANSI Class 125/150 flange	
Materials:			
Body	Carbon steel full lug	Seats	RTFE
Disc	316 stainless steel	Gland Seal	TFE
Shaft	17-4 PH stainless	Bushings	glass backed PTFE
Media temperature range		-20°F to +400° F [-30°C to +204°C]	
Body pressure rating		ANSI Class 150	
Close-off pressure		285 psi	
Rangeability		100:1 (for 30° to 70° range)	
Maximum velocity		32 FPS	

F7 SY...



2 YEAR WARRANTY

F7…150SHP 3-way Butterfly Valve with NEMA 4X Industrial Actuators

ACTUATOR PART #						SY2-24, SY2-110, SY2-220	SY2-24MFT, SY2-120MFT, SY2-230MFT	SY3-24, SY3-110, SY3-220	SY3-24MFT, SY3-120MFT, SY3-230MFT	SY4-24, SY4-110, SY4-220	SY4-24MFT, SY4-120MFT, SY4-230MFT
Control type						On/Off, Floating Point	Proportional/MFT	On/Off, Floating Point	Proportional/MFT	On/Off, Floating Point	Proportional/MFT
Manual override						•	•	•	•	•	•
Running time						15 seconds	15, 17, 17 seconds	22 seconds	22, 26, 26 seconds	16 seconds	16, 18, 18 seconds
ELECTRICAL CONNECTION:											
Two (2) ½" conduit fittings						•	•	•	•	•	•
Covered terminal strip						•	•	•	•	•	•
Butterfly Valve Model #	**C_V 90°**	**C_V 60°**	**Valve Nominal Size Inches**	**DN/mm**	**Close-off psi**						
F750-150SHP	102	56	2"	50	285	$7,888.00	$9,684.00				
F765-150SHP	146	80	2½"	65	285	$8,049.00	$9,845.00				
F780-150SHP	228	125	3"	80	285	$8,060.00	$9,853.00				
F7100-150SHP	451	248	4"	100	285	$9,496.00	$11,286.00				
F7125-150SHP	714	392	5"	125	285			$12,759.00	$14,563.00		
F7150-150SHP	1103	607	6"	150	285			$12,768.00	$14,572.00		
F7200-150SHP	2064	1135	8"	200	285					$16,431.00	$18,511.00
F7250-150SHP	3517	1934	10"	250	150					$23,803.00	$25,883.00

ACTUATOR PART #						SY5-24, SY5-110, SY5-220	SY5-24MFT, SY5-120MFT, SY5-230MFT	SY7-110, SY7-220	SY7-120MFT, SY7-230MFT	SY8-110, SY8-220	SY8-120MFT, SY8-230MFT
Control type						On/Off, Floating Point	Proportional/ MFT	On/Off, Floating Point	Proportional/MFT	On/Off, Floating Point	Proportional/MFT
Manual override						•	•	•	•	•	•
Running time						22 seconds	22, 25, 25 seconds	46 seconds	55 seconds	46 seconds	55 seconds
ELECTRICAL CONNECTION:											
Two (2) ½" conduit fittings						•	•	•	•	•	•
Covered terminal strip						•	•	•	•	•	•
Butterfly Valve Model #	**C_V 90°**	**C_V 60°**	**Valve Nominal Size Inches**	**DN/mm**	**Close-off psi**						
F7250-150SHP	3517	1934	10"	250	285	$24,162.00	$26,247.00				
F7300-150SHP	4837	2660	12"	300	150	$30,775.00	$32,855.00				
F7300-150SHP	4837	2660	12"	300	285			$31,979.00	$34,005.00		
F7350-150SHP	6857	3592	14"	350	285			$42,640.00	$44,667.00		
F7400-150SHP	9287	4865	16"	400	150			$60,056.00	$62,083.00		
F7450-150SHP	11500	3270	18"	450	150					$72,164.00	$74,191.00

Note: Contact factory for 285 psi on valves larger than 20".

067001 - 04/13 - Subject to change. © Belimo Aircontrols (USA), Inc.

F7 ANSI Class 150, Non-Spring Return Actuators

With NEMA 4X Industrial Actuator - 3-Way, Reinforced Teflon® Seat, 316 Stainless Disc

BELIMO

Valve Specifications

Service		chilled, hot water, 60% glycol, steam to 50 psi	
Flow characteristic		modified linear (F7…150SHP)	
Sizes		16", 18", 20", 24"	
End fitting		ANSI Class 125/150 flange	
Materials:			
Body	Carbon steel full lug	Seat	RTFE
Disc	316 stainless steel	Gland Seal	TFE
Shaft	17-4 PH stainless	Bushings	glass backed PTFE
Media temperature range		-20°F to +400° F [-30°C to +204°C]	
Body pressure rating		ANSI Class 150	
Close-off pressure		285 psi	
Rangeability		100:1 (for 30° to 70° range)	
Maximum velocity		32 FPS	



F7 SY...

2 YEAR WARRANTY

F7…150SHP 3-way Butterfly Valve with NEMA 4X Industrial Actuators

ACTUATOR PART #						SY9-110, SY9-220	SY9-120MFT, SY9-230MFT	SY10-110, SY10-220	SY10-120MFT, SY10-230MFT
Control type						On/Off, Floating Point	Proportional/MFT	On/Off, Floating Point	Proportional/MFT
Manual override						•	•	•	•
Running time						58 seconds	70 seconds	58 seconds	70 seconds
ELECTRICAL CONNECTION:									
Two (2) ½" conduit fittings						•	•	•	•
Covered terminal strip						•	•	•	•
Butterfly Valve Model #	**Cv 90°**	**Cv 60°**	**Valve Nominal Size Inches**	**DN/mm**	**Close-off psi**				
F7400-150SHP	9287	4865	16"	400	285	$62,715.00	$64,742.00		
F7450-150SHP	11500	3270	18"	450	285			$73,791.00	$75,819.00
F7500-150SHP	14420	7590	20"	500	150	$92,995.00	$95,022.00		

ACTUATOR PART #						SY11-110, SY11-220	SY11-120MFT, SY11-230MFT	SY12-110, SY12-220	SY12-120MFT, SY12-230MFT
Control type						On/Off, Floating Point	Proportional/MFT	On/Off, Floating Point	Proportional/MFT
Manual override						•	•	•	•
Running time						58 seconds	70 seconds	58 seconds	70 seconds
ELECTRICAL CONNECTION:									
Two (2) ½" conduit fittings						•	•	•	•
Covered terminal strip						•	•	•	•
Butterfly Valve Model #	**Cv 90°**	**Cv 60°**	**Valve Nominal Size Inches**	**DN/mm**	**Close-off psi**				
F7500-150SHP	14420	7590	20"	500	285	$95,606.00	$97,634.00		
F7600-150SHP	22050	11550	24"	600	150			$134,307.00	$136,332.00

SY MULTI-FUNCTION TECHNOLOGY

Description	P-CODE	Control Input Range	Built-in Feedback	Loss of Signal	Running Time	List Price
MFT	ACE	2-10 VDC	2-10 VDC	stop	actuator(s) constant	No Charge
MFT	ACF	0.5-10 VDC	0.5-10 VDC	stop	actuator(s) constant	No Charge
MFT	ACG	4-20mA	4-20mA	stop	actuator(s) constant	No Charge
MFT	ACH	4-20mA	2-10 VDC	stop	actuator(s) constant	No Charge
MFT	W3E	0.02-5.00 seconds PWM*	2-10 VDC	stop	actuator(s) constant	No Charge
MFT	ACJ	2-10 VDC	2-10 VDC	open	actuator(s) constant	No Charge
MFT	ACK	0.5-10 VDC	0.5-10 VDC	open	actuator(s) constant	No Charge
MFT	ACL	4-20mA	4-20mA	open	actuator(s) constant	No Charge
MFT	ACM	4-20mA	2-10 VDC	open	actuator(s) constant	No Charge
MFT	ACN	2-10 VDC	2-10 VDC	close	actuator(s) constant	No Charge
MFT	ACP	0.5-10 VDC	0.5-10 VDC	close	actuator(s) constant	No Charge
MFT	ACR	4-20mA	4-20mA	close	actuator(s) constant	No Charge
MFT	ACS	4-20mA	2-10 VDC	close	actuator(s) constant	No Charge

*Available only on -24MFT actuators.
Other configurations carry a $34.00 list price.
Note: Contact factory for 285 psi on valves larger than 20".

067001 - 04/13 - Subject to change. © Belimo Aircontrols (USA), Inc.

Valve Specifications

Service		chilled, hot water, 60% glycol, steam to 50 psi	
Flow characteristic		modified equal percentage (F6…300SHP) modified linear (F7...300 SHP)	
Sizes		2", 2½", 3", 4"	
End fitting		ANSI Class 300 flange	
Materials:			
Body	Carbon steel full lug	Seats	RTFE
Disc	316 stainless steel	Gland Seal	TFE
Shaft	17-4 PH stainless	Bushings	glass backed PTFE
Media temperature range		-20°F to +400°F [-30°C to +204°C]	
Body pressure rating		ANSI Class 300	
Close-off pressure		740 psi	
Rangeability		100:1 (for 30°F to 70°F)	
Maximum velocity		32 FPS	



F6 GM… F7 2*GM…

2 YEAR WARRANTY

F6…300SHP 2-way Butterfly Valve with Non-Spring Return Actuators

ACTUATOR PART #						GMB24-3-X1	GMX24-MFT-X1	2*GMX24-MFT-X1
Control type						On/Off, Floating Point	Proportional/MFT	Proportional/MFT
Manual override						•	•	•
Running time						150 seconds	150 seconds	90 seconds
Noise level						<45 dB(A)	<45 dB(A)	<45 dB(A)
ELECTRICAL CONNECTION:								
Two (2) ½" conduit fittings						•	•	•
Covered terminal strip						•	•	•
Butterfly Valve Model #	**C_V 90°**	**C_V 60°**	**Valve Nominal Size Inches**	**DN/mm**	**Close-off psi**			
F650-300SHP	100	52	2"	50	285	$3,361.00	$3,476.00	
F665-300SHP	143	75	2½"	65	285	$3,376.00	$3,495.00	
F680-300SHP	117	223	3"	80	285	$3,400.00	$3,514.00	
F6100-300SHP	435	228	4"	100	150	$3,938.00	$4,053.00	
F650-300SHP	100	52	2"	50	400			$3,926.00
F665-300SHP	143	75	2½"	65	400			$3,946.00
F680-300SHP	117	223	3"	80	400			$3,961.00
F6100-300SHP	435	228	4"	100	285			$4,532.00

F7…300SHP 3-way Butterfly Valve with Non-Spring Return Actuators

ACTUATOR PART #						2*GMB24-3-X1	2*GMX24-MFT-X1
F750-300SHP	100	52	2"	50	285	$7,700.00	$7,930.00
F765-300SHP	143	75	2½"	65	285	$8,014.00	$9,170.00
F780-300SHP	223	117	3"	80	285	$9,136.00	$9,367.00
F7100-300SHP	435	228	4"	100	150	$11,331.00	$11,554.00

MULTI-FUNCTION TECHNOLOGY

Description	P-CODE	Control Input Range	Running Time	Built-in Feedback	List Price
P-10001	A01	2-10 VDC	150 seconds	2-10 VDC	No Charge
P-10002	A02	0-10 VDC	150 seconds	0-10 VDC	No Charge
P-10028	A28	0-10 VDC	100 seconds	0-10 VDC	No Charge
P-10063	A63	0.5-4.5 VDC	150 seconds	0.5-4.5 VDC	No Charge
P-10064	A64	5.5-10 VDC	150 seconds	5.5-10 VDC	No Charge
P-20002	W02	0.02-5 seconds PWM	150 seconds	2-10 VDC	No Charge
P-20003	W03	0.10-25.5 seconds PWM	150 seconds	2-10 VDC	No Charge
P-30001	F01	Floating Point	150 seconds	2-10 VDC	No Charge
P-40002	J02	On/Off	150 seconds	2-10 VDC	No Charge

Other configurations carry a $34.00 list price.
Note: Contact factory for valve and actuator combinations higher than 600 psi.

067001 - 04/13 - Subject to change. © Belimo Aircontrols (USA), Inc.

F6 ANSI 300 Class, Spring Return and Electronic Fail-Safe Actuators

2-Way, Reinforced Teflon® Seat, 316 Stainless Disc

BELIMO

Valve Specifications			
Service	chilled, hot water, 60% glycol, steam to 50 psi		
Flow characteristic	modified equal percentage (F6…300SHP) modified linear (F7...300SHP)		
Sizes	2", 2½", 3", 4"		
End fitting	ANSI Class 300 flange		
Materials:			
Body	Carbon steel full lug	Seats	RTFE
Disc	316 stainless steel	Gland Seal	TFE
Shaft	17 - 4 PH stainless	Bushings	glass backed PTFE
Media temperature range	-20°F to +400°F [-30°C to +204°C]		
Body pressure rating	ANSI Class 300		
Close-off pressure	740 psi		
Rangeability	100:1 (for 30°F to 70°F)		
Maximum velocity	32 FPS		



F6 2*AFB...

2 YEAR WARRANTY

F6…300SHP 2-way Butterfly Valve with Spring Return and Electronic Fail-Safe Actuators

ACTUATOR PART #						2*AFBUP-X1	2*AFX24-MFT-X1	GKB24-3-X1	GKX24-MFT-X1	2*GKX24-MFT-X1
Control type						On/Off	Proportional/MFT	On/Off, Floating Point	Proportional/MFT	Proportional/MFT
Manual override						•	•	•	•	•
Running time					Motor	75 seconds	150 seconds	150 seconds	150 seconds	150 seconds
					Spring	<20 seconds	<20 seconds			
					Fail-Safe			35 seconds	35 seconds	35 seconds
Noise level						<45 dB(A)	<45 dB(A)	<45 dB(A)	<45 dB(A)	<45 dB(A)
ELECTRICAL CONNECTION:										
3 ft cable, ½" conduit fitting						•	•	•	•	•
Butterfly Valve Model #	**C_V 90°**	**C_V 60°**	**Valve Nominal Size Inches**	**DN/mm**	**Close-off psi**					
F650-300SHP	100	52	2"	50	150	$3,744.00	$3,870.00			
F665-300SHP	143	75	2½"	65	150	$3,763.00	$3,884.00			
F680-300SHP	223	117	3"	80	150	$3,782.00	$3,903.00			
F6100-300SHP	435	228	4"	100	150			$4,600.00	$4,903.00	
F650-300SHP	100	52	2"	50	285			$4,020.00	$4,323.00	
F665-300SHP	143	75	2½"	65	285			$4,035.00	$4,343.00	
F680-300SHP	223	117	3"	80	285			$4,058.00	$4,361.00	
F6100-300SHP	435	228	4"	100	285					$6,192.00
F650-300SHP	100	52	2"	50	400					$5,606.00
F665-300SHP	143	75	2½"	65	400					$5,626.00
F680-300SHP	117	223	3"	80	400					$5,641.00

F7…300SHP 3-way Butterfly Valve with Electronic Fail-Safe Actuators

ACTUATOR PART #						2*GKX24-MFT-X1
F750-300SHP	100	52	2"	50	285	$9,590.00
F765-300SHP	143	75	2½"	65	285	$10,830.00
F780-300SHP	223	117	3"	80	285	$11,026.00
F7100-300SHP	435	228	4"	100	150	$13,213.00

Note: Contact factory for valve and actuator combinations higher than 600 psi.

067001 - 04/13 - Subject to change. © Belimo Aircontrols (USA), Inc.

Valve Specifications

Service		chilled, hot water, 60% glycol, steam to 50 psi	
Flow characteristic		modified equal percentage (F6…300SHP), modified linear (F7...300 SHP)	
Sizes		2", 2½", 3", 4"	
Type of end fitting		ANSI Class 300 flange	
Materials:			
Body	Carbon steel full lug	Seats	RTFE
Disc	316 stainless steel	Gland Seal	TFE
Shaft	17 - 4 PH stainless	Bushings	glass backed PTFE
Media temperature range		-20°F to +400°F [-30°C to +204°C]	
Body pressure rating		ANSI Class 300	
Close-off pressure		740 psi	
Rangeability		100:1 (for 30°F to 70°F)	
Maximum velocity		32 FPS	



F650-300SHP+GMCB24-3-T-X1 N4

2 YEAR WARRANTY

F6…300SHP 2-way Butterfly Valve with NEMA 4 Non-Spring Return Actuators

ACTUATOR PART #						GMCB24-3-T-X1 N4	GMX24-MFT-T-X1 N4	GMCB24-3-T-X1 N4H	GMB24-MFT-T-X1 N4H
Control type						On/Off, Floating Point	Proportional/MFT	On/Off, Floating Point	Proportional/MFT
Manual override						•	•	•	•
Running time						35 seconds	150 seconds	35 seconds	150 seconds
Noise level						<45 dB(A)	<45 dB(A)	<45 dB(A)	<45 dB(A)
ELECTRICAL CONNECTION:									
½" conduit fitting						•	•	•	•
Covered terminal strip						•	•	•	•
Butterfly Valve Model #	**C_V 90°**	**C_V 60°**	**Valve Nominal Size Inches**	**DN/mm**	**Close-off psi**				
F650-300SHP	100	52	2"	50	285	$4,556.00	$4,780.00	$4,914.00	$5,138.00
F665-300SHP	143	75	2½"	65	285	$4,798.00	$5,016.00	$5,156.00	$5,374.00
F680-300SHP	117	223	3"	80	285	$5,049.00	$5,270.00	$5,407.00	$5,628.00
F6100-300SHP	435	228	4"	100	150	$5,381.00	$5,603.00	$5,739.00	$5,961.00

F7…300SHP 3-way Butterfly Valve with NEMA 4 Non-Spring Return Actuators

ACTUATOR PART #						2*GMCB24-3-T-X1 N4	2*GMX24-MFT-T-X1 N4	2*GMCB24-3-T-X1 N4H	2*GMB24-MFT-T-X1 N4H
F750-300SHP	100	52	2"	50	285	$9,648.00	$9,881.00	$10,006.00	$10,239.00
F765-300SHP	143	75	2½"	65	285	$12,229.00	$12,475.00	$12,587.00	$12,833.00
F780-300SHP	223	117	3"	80	285	$12,645.00	$12,887.00	$13,003.00	$13,245.00
F7100-300SHP	435	228	4"	100	150	$12,208.00	$12,429.00	$13,566.00	$13,787.00

MULTI-FUNCTION TECHNOLOGY

Description	P-CODE	Control Input Range	Running Time	Built-in Feedback	List Price
P-10001	A01	2-10 VDC	150 seconds	2-10 VDC	No Charge
P-10002	A02	0-10 VDC	150 seconds	0-10 VDC	No Charge
P-10028	A28	0-10 VDC	100 seconds	0-10 VDC	No Charge
P-10063	A63	0.5-4.5 VDC	150 seconds	0.5-4.5 VDC	No Charge
P-10064	A64	5.5-10 VDC	150 seconds	5.5-10 VDC	No Charge
P-20002	W02	0.02-5 seconds PWM	150 seconds	2-10 VDC	No Charge
P-20003	W03	0.10-25.5 seconds PWM	150 seconds	2-10 VDC	No Charge
P-30001	F01	Floating Point	150 seconds	2-10 VDC	No Charge
P-40002	J02	On/Off	150 seconds	2-10 VDC	No Charge

Other configurations carry a $34.00 list price.
Note: Contact factory for valve and actuator combinations higher than 600 psi.

067001 - 04/13 - Subject to change. © Belimo Aircontrols (USA), Inc.

F6 ANSI 300 Class, Non-Spring Return Actuators

With NEMA 4X Industrial Actuator - 2-Way, Reinforced Teflon® Seat, 316 Stainless Disc

BELIMO

Valve Specifications

Service	chilled, hot water, 60% glycol, steam to 50 psi		
Flow characteristic	modified equal percentage (F6…300SHP)		
Sizes	2", 2½", 3", 4", 5", 6", 8", 10", 12", 14", 16", 18", 20"		
End fitting	ANSI Class 300 flange		
Materials:			
Body	Carbon steel full lug	Seats	RTFE
Disc	316 stainless steel	Gland Seal	TFE
Shaft	17 - 4 PH stainless	Bushings	glass backed PTFE
Media temperature range	-20°F to +400°F [-30°C to +204°C]		
Body pressure rating	ANSI Class 300		
Close-off pressure	740 psi		
Rangeability	100:1 (for 30°F to 70°F)		
Maximum velocity	32 FPS		



F6 SY...

2 YEAR WARRANTY

F6…300SHP 2-way Butterfly Valve with NEMA 4X Industrial Actuators

ACTUATOR PART #						SY2-24, SY2-110, SY2-220	SY2-24MFT, SY2-120MFT, SY2-230MFT	SY3-24, SY3-110, SY3-220	SY3-24MFT, SY3-120MFT, SY3-230MFT	SY4-24, SY4-110, SY4-220	SY4-24MFT, SY4-120MFT, SY4-230MFT
Control type						On/Off, Floating Point	Proportional/MFT	On/Off, Floating Point	Proportional/MFT	On/Off, Floating Point	Proportional/MFT
Manual override						•	•	•	•	•	•
Running time						15 seconds	15, 17, 17 seconds	22 seconds	22, 26, 26 seconds	16 seconds	16, 18, 18 seconds
ELECTRICAL CONNECTION:											
Two (2) ½" conduit fittings						•	•	•	•	•	•
Covered terminal strip						•	•	•	•	•	•
Butterfly Valve Model #	**Cv 90°**	**Cv 60°**	**Valve Nominal Size Inches**	**DN/mm**	**Close-off psi**						
F650-300SHP	100	52	2"	50	600	$5,147.00	$6,943.00				
F665-300SHP	143	75	2½"	65	600	$5,164.00	$6,960.00				
F680-300SHP	223	117	3"	80	600	$5,183.00	$6,981.00				
F6100-300SHP	435	228	4"	100	600	$5,725.00	$7,520.00				
F6125-300SHP	688	361	5"	125	285	$7,506.00	$9,303.00				
F6125-300SHP	688	361	5"	125	600			$7,744.00	$9,550.00		
F6150-300SHP	1041	546	6"	150	285	$7,545.00	$9,590.00				
F6150-300SHP	1041	546	6"	150	600			$7,781.00	$10,474.00		
F6200-300SHP	1911	1001	8"	200	150			$9,843.00	$11,653.00		
F6200-300SHP	1911	1001	8"	200	600					$10,363.00	$12,474.00
F6250-300SHP	3194	1673	10"	250	285					$15,039.00	$17,119.00
F6300-300SHP	4428	2319	12"	300	150					$19,425.00	$21,329.00

ACTUATOR PART #						SY5-24, SY5-110, SY5-220	SY5-24MFT, SY5-120MFT, SY5-230MFT	SY7-110, SY7-220	SY7-120MFT, SY7-230MFT	SY8-110, SY8-220	SY8-120MFT, SY8-230MFT
Control type						On/Off, Floating Point	Proportional/MFT	On/Off, Floating Point	Proportional/MFT	On/Off, Floating Point	Proportional/MFT
Manual override						•	•	•	•	•	•
Running time						22 seconds	22, 25, 25 seconds	46 seconds	55 seconds	46 seconds	55 seconds
ELECTRICAL CONNECTION:											
Two (2) ½" conduit fittings						•	•	•	•	•	•
Covered terminal strip						•	•	•	•	•	•
Butterfly Valve Model #	**Cv 90°**	**Cv 60°**	**Valve Nominal Size Inches**	**DN/mm**	**Close-off psi**						
F6250-300SHP	3194	1673	10"	250	400	$15,394.00	$17,476.00				
F6250-300SHP	3194	1673	10"	250	600			$16,593.00	$18,625.00		
F6300-300SHP	4428	2319	12"	300	285	$19,603.00	$21,686.00				
F6300-300SHP	4428	2319	12"	300	600			$20,807.00	$22,832.00		
F6350-300SHP	5702	2986	14"	350	150	$31,766.00	$33,851.00				
F6350-300SHP	5702	2986	14"	350	400			$32,972.00	$33,851.00		
F6350-300SHP	5702	2986	14"	350	600					$34,329.00	$36,357.00
F6400-300SHP	8243	3988	16"	400	150			$35,099.00	$37,124.00		
F6400-300SHP	8243	3988	16"	400	285					$36,456.00	$38,483.00
F6450-300SHP	9712	5088	18"	450	150			$44,833.00	$46,859.00		
F6450-300SHP	9712	5088	18"	450	285					$46,192.00	$48,129.00
F6500-300SHP	10658	5775	20"	500	150					$59,761.00	$61,788.00

Note: Contact factory for valve and actuator combinations higher than 600 psi.

067001 - 04/13 - Subject to change. © Belimo Aircontrols (USA), Inc.

Valve Specifications

Service		chilled, hot water, 60% glycol, steam to 50 psi	
Flow characteristic		modified equal percentage (F6…300SHP)	
Sizes		16", 18", 20", 24"	
End fitting		flanged	
Materials:			
Body	Carbon steel full lug	Seats	RTFE
Disc	316 stainless steel	Gland Seal	TFE
Shaft	17 - 4 PH stainless	Bushings	glass backed PTFE
Media temperature range		-20°F to +400°F [-30°C to +204°C]	
Body pressure rating		ANSI Class 300	
Close-off pressure		740 psi	
Rangeability		100:1 (for 30°F to 70°F)	
Maximum velocity		32 FPS	



F6 SY...

2 YEAR WARRANTY

F6…300SHP 2-way Butterfly Valve with NEMA 4X Industrial Actuators

ACTUATOR PART #						SY9-110, SY9-220	SY9-120MFT, SY9-230MFT	SY10-110, SY10-220	SY10-120MFT, SY10-230MFT	SY11-110, SY11-220	SY11-120MFT, SY11-230MFT
Control type						On/Off, Floating Point	Proportional/MFT	On/Off, Floating Point	Proportional/MFT	On/Off, Floating Point	Proportional/MFT
Manual override						•	•	•	•	•	•
Running time						58 seconds	70 seconds	58 seconds	70 seconds	58 seconds	70 seconds
ELECTRICAL CONNECTION:											
Two (2) ½" conduit fittings						•	•	•	•	•	•
Covered terminal strip						•	•	•	•	•	•
Butterfly Valve Model #	**C_V 90°**	**C_V 60°**	**Valve Nominal Size Inches**	**DN/mm**	**Close-off psi**						
F6400-300SHP	8243	3988	16"	400	400	$37,759.00	$39,784.00				
F6400-300SHP	8243	3988	16"	400	600			$38,085.00	$39,784.00		
F6450-300SHP	9712	5088	18"	450	400	$47,494.00	$49,520.00				
F6450-300SHP	9712	5088	18"	450	600					$50,101.00	$52,127.00
F6500-300SHP	10658	5775	20"	500	285			$61,384.00	$63,415.00		
F6500-300SHP	10658	5775	20"	500	400					$63,672.00	$65,700.00
F6600-300SHP	16205	8855	24"	600	150			$76,360.00	$78,386.00		

SY MULTI-FUNCTION TECHNOLOGY

Description	P-CODE	Control Input Range	Built-in Feedback	Loss of Signal	Running Time	List Price
MFT	ACE	2-10 VDC	2-10 VDC	stop	actuator(s) constant	No Charge
MFT	ACF	0.5-10 VDC	0.5-10 VDC	stop	actuator(s) constant	No Charge
MFT	ACG	4-20mA	4-20mA	stop	actuator(s) constant	No Charge
MFT	ACH	4-20mA	2-10 VDC	stop	actuator(s) constant	No Charge
MFT	W3E	0.02-5.00 seconds PWM*	2-10 VDC	stop	actuator(s) constant	No Charge
MFT	ACJ	2-10 VDC	2-10 VDC	open	actuator(s) constant	No Charge
MFT	ACK	0.5-10 VDC	0.5-10 VDC	open	actuator(s) constant	No Charge
MFT	ACL	4-20mA	4-20mA	open	actuator(s) constant	No Charge
MFT	ACM	4-20mA	2-10 VDC	open	actuator(s) constant	No Charge
MFT	ACN	2-10 VDC	2-10 VDC	close	actuator(s) constant	No Charge
MFT	ACP	0.5-10 VDC	0.5-10 VDC	close	actuator(s) constant	No Charge
MFT	ACR	4-20mA	4-20mA	close	actuator(s) constant	No Charge
MFT	ACS	4-20mA	2-10 VDC	close	actuator(s) constant	No Charge

*Available only on -24MFT actuators.
Other configurations carry a $34.00 list price.
Note: Contact factory for valve and actuator combinations higher than 600 psi.

067001 - 04/13 - Subject to change. © Belimo Aircontrols (USA), Inc.

F7 ANSI 300 Class, Non-Spring Return Actuators

With NEMA 4X Industrial Actuator - 3-Way, Reinforced Teflon® Seat, 316 Stainless Disc

BELIMO

Valve Specifications

Service	chilled, hot water, 60% glycol, steam to 50 psi		
Flow characteristic	modified linear (F7…300SHP)		
Sizes	2", 2½", 3", 4", 5", 6", 8", 10", 12", 14", 16", 18"		
End fitting	ANSI Class 300 flange		
Materials:			
Body	Carbon steel full lug	Seats	RTFE
Disc	316 stainless steel	Gland Seal	TFE
Shaft	17 - 4 PH stainless	Bushings	glass backed PTFE
Media temperature range	-20°F to +400° F [-30°C to +204°C]		
Body pressure rating	ANSI Class 300 limitations		
Close-off pressure	740 psi		
Rangeability	100:1 (for 30° to 70° range)		
Maximum velocity	32 FPS		



F7 SY...

2 YEAR WARRANTY

F7…300SHP 3-way Butterfly Valve with NEMA 4X Industrial Actuators

ACTUATOR PART #						SY2-24, SY2-110, SY2-220	SY2-24MFT, SY2-120MFT, SY2-230MFT	SY3-24, SY3-110, SY3-220	SY3-24MFT, SY3-120MFT, SY3-230MFT	SY4-24, SY4-110, SY4-220	SY4-24MFT, SY4-120MFT, SY4-230MFT
Control type						On/Off, Floating Point	Proportional/MFT	On/Off, Floating Point	Proportional/MFT	On/Off, Floating Point	Proportional/MFT
Manual override						•	•	•	•	•	•
Running time						15 seconds	15, 17, 17 seconds	22 seconds	22, 26, 26 seconds	16 seconds	16, 18, 18 seconds
ELECTRICAL CONNECTION:											
Two (2) ½" conduit fittings						•	•	•	•	•	•
Covered terminal strip						•	•	•	•	•	•
Butterfly Valve Model #	**C_V 90°**	**C_V 60°**	**Valve Nominal Size Inches**	**DN/mm**	**Close-off psi**						
F750-300SHP	100	52	2"	50	400	$9,931.00	$11,722.00				
F750-300SHP	100	52	2"	50	600			$10,167.00	$11,976.00		
F765-300SHP	143	75	2½"	65	400	$11,343.00	$13,136.00				
F765-300SHP	143	75	2½"	65	600			$11,576.00	$13,385.00		
F780-300SHP	223	117	3"	80	400	$13,522.00	$15,327.00				
F780-300SHP	223	117	3"	80	600			$13,770.00	$15,578.00		
F7100-300SHP	435	228	4"	100	400	$14,248.00	$16,000.00				
F7100-300SHP	435	228	4"	100	600			$14,487.00	$16,293.00		
F7125-300SHP	688	361	5"	125	285			$19,349.00	$21,157.00		
F7125-300SHP	688	361	5"	125	600					$19,868.00	$21,948.00
F7150-300SHP	1041	546	6"	150	285			$22,049.00	$23,857.00		
F7150-300SHP	1041	546	6"	150	600					$22,567.00	$24,650.00
F7200-300SHP	1911	1001	8"	200	400					$27,248.00	$29,331.00
F7250-300SHP	3194	1673	10"	250	150					$39,432.00	$41,515.00

ACTUATOR PART #						SY5-24, SY5-110, SY5-220	SY5-24MFT, SY5-120MFT, SY5-230MFT	SY7-110, SY7-220	SY7-120MFT, SY7-230MFT	SY8-110, SY8-220	SY8-120MFT, SY8-230MFT
Control type						On/Off, Floating Point	Proportional/MFT	On/Off, Floating Point	Proportional/MFT	On/Off, Floating Point	Proportional/MFT
Manual override						•	•	•	•	•	•
Running time						22 seconds	22, 25, 25 seconds	46 seconds	55 seconds	46 seconds	55 seconds
ELECTRICAL CONNECTION:											
Two (2) ½" conduit fittings						•	•	•	•	•	•
Covered terminal strip						•	•	•	•	•	•
Butterfly Valve Model #	**C_V 90°**	**C_V 60°**	**Valve Nominal Size Inches**	**DN/mm**	**Close-off psi**						
F7200-300SHP	1911	1001	8"	200	600	$27,606.00	$29,686.00				
F7250-300SHP	3194	1673	10"	250	285	$39,793.00	$41,873.00				
F7250-300SHP	3194	1673	10"	250	600			$40,994.00	$43,023.00		
F7300-300SHP	4428	2319	12"	300	150	$52,970.00	$57,941.00				
F7300-300SHP	4428	2319	12"	300	400			$54,174.00	$56,203.00		
F7300-300SHP	4428	2319	12"	300	600					$55,521.00	$57,559.00
F7350-300SHP	5702	2986	14"	350	150			$84,284.00	$86,315.00		
F7350-300SHP	5702	2986	14"	350	400					$85,647.00	$87,674.00
F7400-300SHP	8243	3988	16"	400	150			$94,057.00	$96,084.00		
F7450-300SHP	9712	5088	18"	450	150					$121,298.00	$123,324.00

Note: Contact factory for valve and actuator combinations higher than 600 psi.

067001 - 04/13 - Subject to change. © Belimo Aircontrols (USA), Inc.

Valve Specifications

Service		chilled, hot water, 60% glycol, steam to 50 psi	
Flow characteristic		modified linear (F7…300SHP)	
Sizes		14”, 16”, 18”, 20”, 24”	
End fitting		ANSI Class 300 flange	
Materials:			
Body	Carbon steel full lug	Seats	RTFE
Disc	316 stainless steel	Gland Seal	TFE
Shaft	17 - 4 PH stainless	Bushings	glass backed PTFE
Media temperature range		-20°F to +400° F [-30°C to +204°C]	
Body pressure rating		ANSI Class 300	
Close-off pressure		740 psi	
Rangeability		100:1 (for 30° to 70° range)	
Maximum velocity		32 FPS	



F7 SY...

2 YEAR WARRANTY

F7…300SHP 3-way Butterfly Valve with NEMA 4X Industrial Actuators

ACTUATOR PART #						SY9-110, SY9-220	SY9-120MFT, SY9-230MFT	SY10-110, SY10-220	SY10-120MFT, SY10-230MFT
Control type						On/Off, Floating Point	Proportional/MFT	On/Off, Floating Point	Proportional/MFT
Manual override						•	•	•	•
Running time						58 seconds	70 seconds	58 seconds	70 seconds
ELECTRICAL CONNECTION:									
Two (2) ½” conduit fittings						•	•	•	•
Covered terminal strip						•	•	•	•
Butterfly Valve Model #	**C_V 90°**	**C_V 60°**	**Valve Nominal Size Inches**	**DN/mm**	**Close-off psi**				
F7350-300SHP	5702	2986	14”	350	600			$87,272.00	$89,298.00
F7400-300SHP	8243	3988	16”	400	285	$96,718.00	$98,742.00		
F7400-300SHP	8243	3988	16”	400	400			$97,042.00	$99,068.00
F7450-300SHP	9712	5088	18”	450	285			$122,923.00	$128,004.00
F7500-300SHP	10658	5775	20”	500	150	$161,921.00	$163,946.00		

ACTUATOR PART #						SY11-110, SY11-220	SY11-120MFT, SY11-230MFT	SY12-110, SY12-220	SY12-120MFT, SY12-230MFT
Control type						On/Off, Floating Point	Proportional/MFT	On/Off, Floating Point	Proportional/MFT
Manual override						•	•	•	•
Running time						58 seconds	70 seconds	58 seconds	70 seconds
ELECTRICAL CONNECTION:									
Two (2) ½” conduit fittings						•	•	•	•
Covered terminal strip						•	•	•	•
Butterfly Valve Model #	**C_V 90°**	**C_V 60°**	**Valve Nominal Size Inches**	**DN/mm**	**Close-off psi**				
F7400-300SHP	8243	3988	16”	400	600			$99,977.00	$102,001.00
F7450-300SHP	9712	5088	18”	450	400	$125,208.00	$127,236.00		
F7500-300SHP	10658	5775	20”	500	285			$165,180.00	$167,208.00
F7600-300SHP	16205	8855	24”	600	150			$218,224.00	$220,251.00

SY MULTI-FUNCTION TECHNOLOGY

Description	P-CODE	Control Input Range	Built-in Feedback	Loss of Signal	Running Time	List Price
MFT	ACE	2-10 VDC	2-10 VDC	stop	actuator(s) constant	No Charge
MFT	ACF	0.5-10 VDC	0.5-10 VDC	stop	actuator(s) constant	No Charge
MFT	ACG	4-20mA	4-20mA	stop	actuator(s) constant	No Charge
MFT	ACH	4-20mA	2-10 VDC	stop	actuator(s) constant	No Charge
MFT	W3E	0.02-5.00 seconds PWM*	2-10 VDC	stop	actuator(s) constant	No Charge
MFT	ACJ	2-10 VDC	2-10 VDC	open	actuator(s) constant	No Charge
MFT	ACK	0.5-10 VDC	0.5-10 VDC	open	actuator(s) constant	No Charge
MFT	ACL	4-20mA	4-20mA	open	actuator(s) constant	No Charge
MFT	ACM	4-20mA	2-10 VDC	open	actuator(s) constant	No Charge
MFT	ACN	2-10 VDC	2-10 VDC	close	actuator(s) constant	No Charge
MFT	ACP	0.5-10 VDC	0.5-10 VDC	close	actuator(s) constant	No Charge
MFT	ACR	4-20mA	4-20mA	close	actuator(s) constant	No Charge
MFT	ACS	4-20mA	2-10 VDC	close	actuator(s) constant	No Charge

*Available only on -24MFT actuators.
Other configurations carry a $34.00 list price.
Note: Contact factory for valve and actuator combinations higher than 600 psi.

067001 - 04/13 - Subject to change. © Belimo Aircontrols (USA), Inc.

Valve Accessories

Butterfly Valves

BELIMO

INTERFACES, CABLES		NON-SPRING RETURN ACTUATORS			SPRING RETURN ACTUATORS	LIST PRICE
		AM	GM	SY	AF	
	**ZIP-USB-MP US** PC-interface: Compact unit for use with USB port and "ZK" style cable adapter (ZK cable below purchased separately)	•	•	•	•	$582.00
	**ZK1-GEN** Cable for use with ZIP-USB-MP US to connect to new generation non-spring return actuator via diagnostic/ programming socket	•	•			$102.00
	**ZK2-GEN** Cable for use with ZIP-USB-MP US to connect with spring return and non-spring return actuators not equipped with diagnostic/ programming socket	•	•	•		$47.00
	**ZK6-GEN** Cable for use with ZIP-USB-MP US to connect to SY actuator via RJII port			•		$49.00
PROGRAMMING TOOLS						
	**MFT-P** Belimo MFT configuration software (V3.X) Includes: PC-Tool software and MFT-LBL kit US (interface cables [ZIP-RS232 US and ZIP-USB-MP] not included)	•	•	•	•	$158.00

BATTERY BACKUP		NON-SPRING RETURN ACTUATORS			SPRING RETURN ACTUATORS	LIST PRICE
		AM/AR	GM/GR	SY	AF	
	**NSV24 US** Battery backup module	•	•			$783.00
	NSV-BAT US 12VDC 1.2 AH battery (2 required)	•	•			$119.00
	NSV-SY-01 Battery backup system for SY1-SY6; 2 position - 110 VAC			•		$4,142.00
	NSV-SY-02 Battery backup system for SY1-SY6; proportional - 120 VAC			•		$4,328.00
	NSV-SY-03 Battery backup system for SY7; 2 position - 110 VAC			•		$4,440.00
	NSV-SY-04 Battery backup system for SY7; proportional - 110 VAC			•		$4,632.00
	NSV-SY-05 Battery backup system for SY8-SY12; 2 position - 110 VAC			•		$7,023.00
	NSV-SY-06 Battery backup system for SY8-SY12; proportional - 120 VAC			•		$7,214.00
	NSV-SY-11 Battery backup system for SY1-SY5; 2 position - 24 VAC			•		$4,833.00
	NSV-SY-12 Battery backup system for SY1-SY5; proportional - 24 VAC			•		$4,960.00
	NSV-SY-21 Battery backup system for SY1-SY6; 2 position - 220 VAC			•		$4,770.00
	NSV-SY-22 Battery backup system for SY1-SY6; proportional - 230 VAC			•		$4,896.00
	NSV-SY-23 Battery backup system for SY7-SY9; 2 position - 220 VAC			•		$4,971.00
	NSV-SY-24 Battery backup system for SY7-SY9; proportional - 230 VAC			•		$5,091.00
	NSV-SY-25 Battery backup system for SY10-SY12; 2 position - 220 VAC			•		$8,279.00
	NSV-SY-26 Battery backup system for SY10-SY12; proportional - 230 VAC			•		$8,406.00

067001 - 04/13 - Subject to change. © Belimo Aircontrols (USA), Inc.

		NON-SPRING RETURN ACTUATORS			SPRING RETURN ACTUATORS	
WEATHERSHIELDS		**AM**	**GM**	**SY**	**AF**	**LIST PRICE**
	**ZS-BFV-10** AM series for F6, F7 HD, HDU	•				$291.00
	ZS-BFV-20 GM series for F6, F7 HD, HDU		•			$291.00
	ZS-BFV-30 AF series for F6, F7 HD, HDU				•	$291.00
	ZS-BFV-60 Dual GM series for F6 HD, HDU (4" - 6")		•			$517.00
	ZS-BFV-70 Dual AF series for F6 HD, HDU (2.5" - 3")				•	$517.00
	ZS-BFV-80 Dual AF series for F6 HD, HDU (4", 5")				•	$517.00
	ZS-BFV-90 Dual AF/GM series for F7 HD, HDU below 4" (specify valve size)		•		•	$517.00
	ZS-BFV-100 Dual GM series for F7 HD, HDU (4" - 6")		•			$517.00
	ZS-BFV-110 GM/GR series for F6 HD, HDU (4" - 6")		•			$517.00
ELECTRIC DISCONNECT						
	HOA-120V Local electric disconnect SY2-SY12; 2 position - 110/230V			•		$587.00
	HOA-120VMFT Local electric disconnect SY2-SY12; proportional - 110/230V			•		$587.00
	HOA-24V Local electric disconnect SY2-SY12; 2 position - 24V			•		$587.00
	HOA-24VMFT Local electric disconnect SY2-SY12; proportional - 24V			•		$587.00
AUXILIARY SWITCHES & POTENTIOMETERS						
	SY-1000-FB01 1000 Ω feedback potentiometer. 2 Position, factory installed option only			•		$252.00
	SY-1000-FB02 1000 Ω feedback potentiometer. Proportional, factory installed option only (proportional models SYx...-P, -SR or -MFT)			•		$252.00
	**S1A** Auxiliary switch - 1x SPDT, 3A (0.5A inductive) @ 250 VAC	•	•			$84.00
	S2A Auxiliary switch - 2x SPDT, 3A (0.5A inductive) @ 250 VAC	•	•			$125.00
	P140A GR Feedback potentiometer 140 Ω	•	•			$138.00
	P500A GR Feedback potentiometer 500 Ω	•	•			$138.00
	P1000A GR Feedback potentiometer 1000 Ω	•	•			$138.00
	P2800A GR Feedback potentiometer 2800 Ω	•	•			$138.00
	P5000A GR Feedback potentiometer 5000 Ω	•	•			$138.00
	P10000A GR Feedback potentiometer 10000 Ω	•	•			$138.00

067001 - 04/13 - Subject to change. © Belimo Aircontrols (USA), Inc.

HANDWHEELS



	NON-SPRING RETURN ACTUATORS			SPRING RETURN ACTUATORS	
	AM	GM	SY	AF	LIST PRICE
ZG-SY23 SY2-SY3 handwheel (replacement only)			•		$46.00
ZG-SY46 SY4-SY6 handwheel (replacement only)			•		$65.00
ZG-SY78 SY7-SY8 handwheel (replacement only)			•		$208.00
ZG-SY912 SY9-SY12 handwheel (replacement only)			•		$229.00

MANUAL HANDLES



	VALVE	
	HDU/HD	LIST PRICE
F650HD+HND01 2" HD series valve with manual handle ductile iron, 200 psi close-off, C_V 115	•	$223.00
F665HD+HND01 2.5" HD series valve with manual handle ductile iron, 200 psi close-off, C_V 196	•	$238.00
F680HD+HND01 3" HD series valve with manual handle ductile iron, 200 psi close-off, C_V 302	•	$262.00
F6100HD+HND02 4" HD series valve with manual handle ductile iron, 200 psi close-off, C_V 600	•	$346.00
F6125HD+HND02 5" HD series valve with manual handle ductile iron, 200 psi close-off, C_V 1022	•	$500.00
F6150HD+HND02 6" HD series valve with manual handle ductile iron, 200 psi close-off, C_V 1579	•	$584.00
F6200HD+HND03 8" HD series valve with manual handle ductile iron, 200 psi close-off, C_V 3136	•	$863.00

GEAR OPERATORS



F650HD+GW01 2" HD series valve with manual gear operator ductile iron, 200 psi close-off, C_V 115	•	$346.00
F665HD+GW01 2.5" HD series valve with manual gear operator ductile iron, 200 psi close-off, C_V 196	•	$454.00
F680HD+GW01 3" HD series valve with manual gear operator ductile iron, 200 psi close-off, C_V 302	•	$498.00
F6100HD+GW02 4" HD series valve with manual gear operator ductile iron, 200 psi close-off, C_V 600	•	$575.00
F6125HD+GW02 5" HD series valve with manual gear operator ductile iron, 200 psi close-off, C_V 1022	•	$681.00
F6150HD+GW02 6" HD series valve with manual gear operator ductile iron, 200 psi close-off, C_V 1579	•	$732.00
F6200HD+GW03 8" HD series valve with manual gear operator ductile iron, 200 psi close-off, C_V 3136	•	$1,091.00
F6250HD+GW04 10" HD series valve with manual gear operator ductile iron, 200 psi close-off, C_V 5340	•	$1,760.00
F6300HD+GW04 12" HD series valve with manual gear operator ductile iron, 200 psi close-off,C_V 8250	•	$2,077.00
F6350HD+GW04 14" HD series valve with manual gear operator ductile iron, 150 psi close-off, C_V 11917	•	$2,686.00
F6400HD+GW05 16" HD series valve with manual gear operator ductile iron, 150 psi close-off, C_V 16388	•	$4,577.00
F6450HD+GW06 18" HD series valve with manual gear operator ductile iron, 150 psi close-off, C_V 21705	•	$5,513.00
F6500HD+GW07 20" HD series valve with manual gear operator ductile iron, 150 psi close-off, C_V 27908	•	$7,920.00
F6600HD+GW08 24" HD series valve with manual gear operator ductile iron, 150 psi close-off, C_V 43116	•	$13,318.00
F6750HD+GW09 30" HD series valve with manual gear operator ductile iron, 150 psi close-off, C_V 73426	•	$25,303.00

067001 - 04/13 - Subject to change. © Belimo Aircontrols (USA), Inc.

MANUAL HANDLES		VALVE 150SHP	LIST PRICE
	**F650-150SHP+HND05** 2" SHP series valve with manual handle cast steel, ANSI 150 close-off limitations, C_V 102	•	$2,854.00
	F665-150SHP+HND05 2.5" SHP series valve with manual handle cast steel, ANSI 150 close-off limitations, C_V 146	•	$2,812.00
	F680-150SHP+HND06 3" SHP series valve with manual handle cast steel, ANSI 150 close-off limitations, C_V 228	•	$2,872.00
	F6100-150SHP+HND06 4" SHP series valve with manual handle cast steel, ANSI 150 close-off limitations, C_V 451	•	$3,060.00
	F6125-150SHP+HND07 5" SHP series valve with manual handle cast steel, ANSI 150 close-off limitations, C_V 714	•	$4,913.00
	F6150-150SHP+HND07 6" SHP series valve with manual handle cast steel, ANSI 150 close-off limitations, C_V 1103	•	$4,489.00
	F6200-150SHP+HND08 8" SHP series valve with manual handle cast steel, ANSI 150 close-off limitations, C_V 2064	•	$5,741.00
GEAR OPERATORS			
	**F650-150SHP+GW10** 2" SHP series valve with manual gear operator cast steel, ANSI 150 close-off limitations, C_V 102	•	$3,763.00
	F665-150SHP+GW10 2.5" SHP series valve with manual gear operator cast steel, ANSI 150 close-off limitations, C_V 146	•	$3,847.00
	F680-150SHP+GW11 3" SHP series valve with manual gear operator cast steel, ANSI 150 close-off limitations, C_V 228	•	$3,905.00
	F6100-150SHP+GW11 4" SHP series valve with manual gear operator cast steel, ANSI 150 close-off limitations, C_V 451	•	$4,025.00
	F6125-150SHP+GW12 5" SHP series valve with manual gear operator cast steel, ANSI 150 close-off limitations, C_V 714	•	$5,540.00
	F6150-150SHP+GW12 6" SHP series valve with manual gear operator cast steel, ANSI 150 close-off limitations, C_V 1103	•	$5,624.00
	F6200-150SHP+GW13 8" SHP series valve with manual gear operator cast steel, ANSI 150 close-off limitations, C_V 2064	•	$6,653.00
	F6250-150SHP+GW15 10" SHP series valve with manual gear operator cast steel, ANSI 150 close-off limitations, C_V 3517	•	$9,898.00
	F6300-150SHP+GW17 12" SHP series valve with manual gear operator cast steel, ANSI 150 close-off limitations, C_V 4837	•	$13,036.00
	F6350-150SHP+GW19 14" SHP series valve with manual gear operator cast steel, ANSI 150 close-off limitations, C_V 6857	•	$17,234.00
	F6400-150SHP+GW21 16" SHP series valve with manual gear operator cast steel, ANSI 150 close-off limitations, C_V 9287	•	$24,459.00
	F6450-150SHP+GW23 18" SHP series valve with manual gear operator cast steel, ANSI 150 close-off limitations, C_V 11500	•	$28,513.00
	F6500-150SHP+GW25 20" SHP series valve with manual gear operator cast steel, ANSI 150 close-off limitations, C_V 14420	•	$38,260.00
	F6600-150SHP+GW27 24" SHP series valve with manual gear operator cast steel, ANSI 150 close-off limitations, C_V 22050	•	$53,104.00
	F6750-150SHP+GW29 30" SHP series valve with manual gear operator cast steel, ANSI 150 close-off limitations, C_V 34388	•	$95,336.00

067001 - 04/13 - Subject to change. © Belimo Aircontrols (USA), Inc.

		VALVE	
MANUAL HANDLES		**300SHP**	**LIST PRICE**
	**F650-300SHP+HND05** 2" SHP series valve with manual handle cast steel, ANSI 300 close-off limitations, C_V 100	•	$3,224.00
	F665-300SHP+HND05 2.5" SHP series valve with manual handle cast steel, ANSI 300 close-off limitations, C_V 143	•	$3,245.00
	F680-300SHP+HND06 3" SHP series valve with manual handle cast steel, ANSI 300 close-off limitations, C_V 223	•	$2,984.00
	F6100-300SHP+HND06 4" SHP series valve with manual handle cast steel, ANSI 300 close-off limitations, C_V 435	•	$3,193.00
	F6125-300SHP+HND07 5" SHP series valve with manual handle cast steel, ANSI 300 close-off limitations, C_V 688	•	$5,576.00
	F6150-300SHP+HND08 6" SHP series valve with manual handle cast steel, ANSI 300 close-off limitations, C_V 1041	•	$4,512.00
GEAR OPERATORS			
	**F650-300SHP+GW10** 2" SHP series valve with manual gear operator cast steel, ANSI 300 close-off limitations, C_V 100	•	$3,970.00
	F665-300SHP+GW10 2.5" SHP series valve with manual gear operator cast steel, ANSI 300 close-off limitations, C_V 143	•	$3,991.00
	F680-300SHP+GW11 3" SHP series valve with manual gear operator cast steel, ANSI 300 close-off limitations, C_V 223	•	$3,730.00
	F6100-300SHP+GW11 4" SHP series valve with manual gear operator cast steel, ANSI 300 close-off limitations, C_V 435	•	$3,933.00
	F6125-300SHP+GW12 5" SHP series valve with manual gear operator cast steel, ANSI 300 close-off limitations, C_V 688	•	$6,303.00
	F6150-300SHP+GW13 6" SHP series valve with manual gear operator cast steel, ANSI 300 close-off limitations, C_V 1041	•	$5,239.00
	F6200-300SHP+GW14 8" SHP series valve with manual gear operator cast steel, ANSI 300 close-off limitations, C_V 1911	•	$6,977.00
	F6250-300SHP+GW16 10" SHP series valve with manual gear operator cast steel, ANSI 300 close-off limitations, C_V 3194	•	$11,570.00
	F6300-300SHP+GW18 12" SHP series valve with manual gear operator cast steel, ANSI 300 close-off limitations, C_V 4428	•	$15,279.00
	F6350-300SHP+GW20 14" SHP series valve with manual gear operator cast steel, ANSI 300 close-off limitations, C_V 5702	•	$26,999.00
	F6400-300SHP+GW22 16" SHP series valve with manual gear operator cast steel, ANSI 300 close-off limitations, C_V 8243	•	$31,908.00
	F6450-300SHP+GW24 18" SHP series valve with manual gear operator cast steel, ANSI 300 close-off limitations, C_V 9712	•	$40,612.00
	F6500-300SHP+GW26 20" SHP series valve with manual gear operator cast steel, ANSI 300 close-off limitations, Cv 10658	•	$51,876.00
	F6600-300SHP+GW28 24" SHP series valve with manual gear operator cast steel, ANSI 300 close-off limitations, C_V 16205	•	$76,145.00

067001 - 04/13 - Subject to change. © Belimo Aircontrols (USA), Inc.

16 PIPE PACKAGES

- Simple computer selection software makes building proper kits a snap.
- One point of ordering providing reliable solutions with fast delivery.
- Full port design minimizes terminal unit piping pressure drop.
- Eliminates numerous piping connections saving time and money.
- 100% tested for guaranteed results.

Applications

The pipe package is a systematic way of piping HVAC terminal units that reduces the time, space, and cost required to make the connection from the distribution piping in the building and the coil. To effectively carry this out, Belimo offers a combination of valves and unions that are created to interface with an HVAC terminal unit.

Typical terminal installations are VAV coils, fan coils, unit ventilators, reheat coils, cabinet unit heaters, air handlers, radiant panels, heat pumps, duct coils, fin tubes, and convectors.

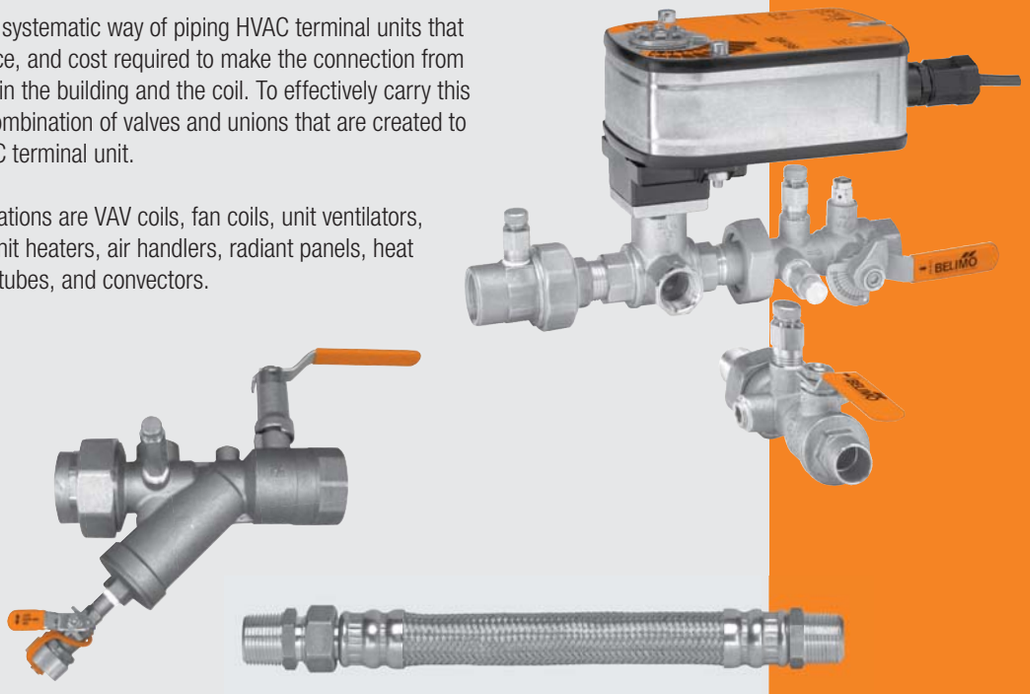

Pipe Package Nomenclature

*P 2	1 1 1	1 2 1 3	1 2 1 1	2
Pipe Package P = Pipe Package **Valve Type** P = PICCV 2 = 2-way CCV 3 = 3-way CCV Z = Zone **Options** X = Extension Package S = Supply Side Package	**Union** **Valve Size** 1 = ½" 2 = ¾" 3 = 1" 4 = 1" to ¾" 5 = ¾" to ½" A = 1-1/2" B = 1-1/4" C = 2" D = 1-1/4" to 1" E = 1-1/2" to 1-1/4" F = 2" to 1-1/2" G = 1" to 1/2" H = 1-1/4" to 3/4" J = 1-1/2" to 1" K = 2" to 1-1/4" **Body End*** 1 = Female NPT 2 = Copper Sweat 3 = Male NPT **Configuration** 1= Standard **Tailpiece End** Male NPT Only	**Isolation Valve / Manual Balance Valve** **Valve Size** 1 = ½" 2 = ¾" 3 = 1" 4 = 1" to ¾" 5 = ¾" to ½" A = 1-1/2" B = 1-1/4" C = 2" D = 1-1/4" to 1" E = 1-1/2" to 1-1/4" F = 2" to 1-1/2" G = 1" to 1/2" H = 1-1/4" to 3/4" J = 1-1/2" to 1" K = 2" to 1-1/4" **Body End** 1 = Female NPT 2 = Copper Sweat **Configuration** 1 = Standard **Flow Rate** 0 = No Setting for Isolation Valve 1 = 1.30 GPM (1/2", 3/4") 2 = 2.65 GPM (1/2', 3/4") 3 = 7.00 GPM (1/2", 3/4") 4 = 7.00 GPM (1") 5 = 17.50 GPM (1") A = 35.80 GPM (1-1/4") B = 40.80 GPM (1-1/2") C = 56.90 GPM (2") D = 95.00 GPM (2") E = 13.00 GPM (3/4") **Tailpiece End** Male NPT Only	**Strainer / Isolation Valve** **Valve Size** 1 = ½" 2 = ¾" 3 = 1" 4 = 1" to ¾" 5 = ¾" to ½" A = 1-1/2" B = 1-1/4" C = 2" D = 1-1/4" to 1" E = 1-1/2" to 1-1/4" F = 2" to 1-1/2" G = 1" to 1/2" H = 1-1/4" to 3/4" J = 1-1/2" to 1" K = 2" to 1-1/4" **Body End** 1 = Female NPT 2 = Copper Sweat **Configuration** 1 = Standard **Tailpiece End (Strainer Option)** 1 = Female NPT 2 = Copper Sweat 3 = Male NPT **Tailpiece End (Isolation Valve Option)** 0 = Select "0" for Isolation Valve Option Male NPT Only	**Hose (set of 2)** **Diameter & Length** 1 = ½" (12" length) 2 = ½" (24" length) 3 = ¾" (12" length) 4 = ¾" (24" length) 5 = 1" (12" length) 6 = 1" (24" length) 7 = 1/2" (18" length) 8 = 3/4" (18" length) 9 =1" (18" length) A = 1-1/4" (18" length) H = 1-1/4" (24" length) B = 1-1/4" (36" length) C = 1-1/2" (18" length) D =1-1/2"(24" length) E =1-1/2" (36" length) F = 2" (24" length) G = 2" (36" length)

Please refer to typical Pipe Package layouts on pages prior to ordering.

*** Pipe Package Smart Code does not include the Belimo Control Valve and price.**

UNION BODY x TAIL	PART NUMBER	UNION LIST PRICE	ISOLATION VALVE BODY x TAIL	PART NUMBER	ISOLATION VALVE LIST PRICE
1/2" x 1/2"	PPU111	$65.00	1/2" x 1/2"	PPV1110	$116.00
3/4" x 3/4"	PPU211	$75.00	3/4" x 3/4"	PPV2110	$133.00
1" x 1"	PPU311	$98.00	1" x 1"	PPV3110	$198.00
1" x 3/4"	PPU411	$98.00	1" x 3/4"	PPV4110	$198.00
3/4" x 1/2"	PPU511	$75.00	3/4" x 1/2"	PPV5110	$133.00
1-1/2" x 1-1/2"	PPUA11	$198.00	1-1/2" x 1-1/2"	PPVA110	$581.00
1-1/4" x 1-1/4"	PPUB11	$142.00	1-1/4" x 1-1/4"	PPVB110	$452.00
2" x 2"	PPUC11	$288.00	2" x 2"	PPVC110	$785.00
1-1/4" x 1"	PPUD11	$142.00	1-1/4" x 1"	PPVD110	$452.00
1-1/2" x 1-1/4"	PPUE11	$198.00	1-1/2" x 1-1/4"	PPVE110	$581.00
2" x 1-1/2"	PPUF11	$288.00	2" x 1-1/2"	PPVF110	$785.00
1" x 1/2"	PPUG11	$98.00	1" x 1/2"	PPVG110	$196.00
1-1/4" to 3/4"	PPUH11	$142.00	1-1/4" to 3/4"	PPVH110	$452.00
1-1/2" x 1"	PPUJ11	$198.00	1-1/2" x 1"	PPVJ110	$581.00
2" x 1-1/4"	PPUK11	$288.00	2" x 1-1/4"	PPVK110	$785.00

MANUAL BALANCE VALVE BODY x TAIL	PART NUMBER	MANUAL BALANCE VALVE LIST PRICE
1/2" x 1/2" (Max 1.30 GPM)	PPL1111	$196.00
1/2" x 1/2"(Max 2.65 GPM)	PPL1112	$196.00
1/2" x 1/2" (Max 7.00 GPM)	PPL1113	$196.00
3/4" x 3/4" (Max 1.30 GPM)	PPL2111	$200.00
3/4" x 3/4" (Max 2.65 GPM)	PPL2112	$200.00
3/4" x 3/4" (Max 7.00 GPM)	PPL2113	$200.00
1" x 1" (Max 7.00 GPM)	PPL3114	$304.00
1" x 1" (Max 17.50 GPM)	PPL3115	$304.00
1" x 3/4" (Max 7.00 GPM)	PPL4114	$304.00
1" x 3/4" (Max 7.00 GPM)	PPL4115	$304.00
1" x 3/4" (Max 17.50 GPM)	PPL5111	$304.00
1" x 3/4" (Max 17.50 GPM)	PPL5112	$304.00
3/4" x 1/2" (Max 1.30 GPM)	PPL5113	$200.00
3/4" x 1/2" (Max 2.65 GPM)	PPLA11B	$200.00
3/4" x 1/2" (Max 7.00 GPM)	PPLB11A	$200.00
1-1/2" x 1-1/2" (Max 40.80 GPM)	PPLC11D	$536.00
1-1/4" x 1-1/4" (Max 35.80 GPM)	PPLD114	$441.00
2" x 2" (Max 56.90 GPM)	PPLE11B	$738.00
2" x 2" (Max 95.00 GPM)	PPLF11C	$738.00
1-1/4" x 1" (Max 35.80 GPM)	PPLF11D	$445.00
1-1/2" x 1-1/4" (Max 40.80 GPM)	PPGF114	$536.00
2" x 1-1/2" (Max 56.90 GPM)	PPLG114	$738.00
2" x 1-1/2" (Max 95.00 GPM)	PPLH11A	$738.00
1" x 1/2" (Max 7.00 GPM)	PPLK11B	$304.00
1" x 1/2" (Max 17.50 GPM)	PPLJ11C	$304.00
1-1/4" x 3/4" (Max 35.80 GPM)	PPLH11A	$441.00
1-1/2" x 1" (Max 40.80 GPM)	PPLE11B	$536.00
2" x 1-1/4" (Max 56.90 GPM)	PPLK11C	$738.00

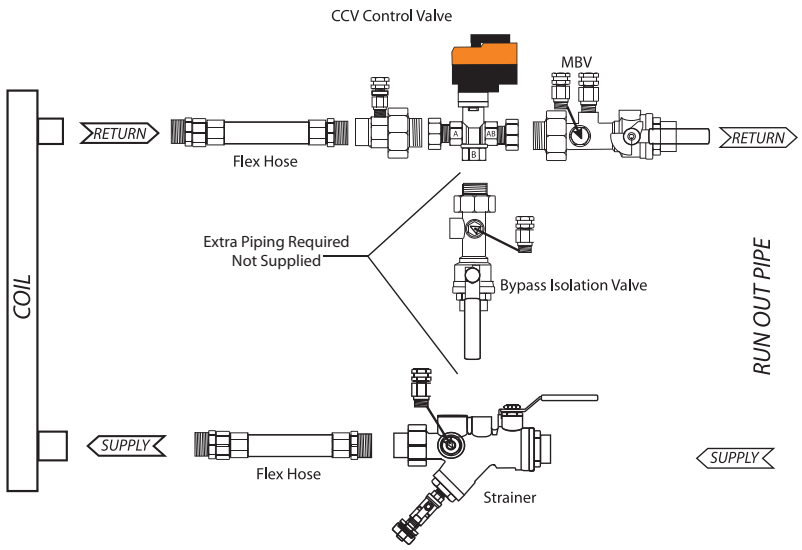

STRAINER BODY x TAIL	PART NUMBER	STRAINER LIST PRICE	HOSE SET (2)	PART NUMBER	HOSE SET (2) LIST PRICE
1/2" 1/2"	PPS1111	$157.00	1/2" (12" length)	PHOSE1	$102.00
3/4" x 3/4"	PPS2111	$192.00	1/2" (24" length)	PHOSE2	$126.00
1" x 1"	PPS3111	$214.00	3/4" (12" length)	PHOSE3	$159.00
1" x 3/4"	PPS4111	$214.00	3/4" (24" length)	PHOSE4	$204.00
3/4" x 1/2"	PPS5111	$192.00	1" (12" length)	PHOSE5	$302.00
1-1/2" x 1-1/2"	PPSA111	$349.00	1" (24" length)	PHOSE6	$351.00
1-1/4" x 1-1/4"	PPSB111	$349.00	1/2" (18" length)	PHOSE1C	$126.00
2" x 2"	PPSC111	$600.00	3/4" (18" length)	PHOSE3C	$196.00
1-1/4" x 1"	PPSD111	$349.00	1" (18" length)	PHOSE5C	$359.00
1-1/2" x 1-1/4"	PPSE111	$349.00	1-1/4" (18" length)	PHOSEAA	$543.00
2" x 1-1/2"	PPSF111	$600.00	1-1/4" (24" length)	PHOSEAB	$604.00
1" x 1/2"	PPSG111	$214.00	1-1/4" (36" length)	PHOSEAC	$706.00
1-1/4" x 3/4"	PPSH111	$349.00	1-1/2" (18" length)	PHOSEBA	$779.00
1-1/2" x 1"	PPSJ111	$349.00	1-1/2"(24" length)	PHOSEBB	$865.00
2" x 1-1/4"	PPSK111	$600.00	1-1/2" (36" length)	PHOSEBC	$1,081.00
			2" (24" length)	PHOSECA	$1,656.00
			2" (36" length)	PHOSECB	$1,930.00

Add price for Isolation Bypass Valve for 3-way CCV Packages. Bypass Valve is not shown in the reorder number.
Example: A 1/2" 3-way CCV, will get a 1/2" Isolation Valve for the Bypass Port. The adder for the Isolation Valve in this example is $116.00 List Price.

067001 - 04/13 - Subject to change. © Belimo Aircontrols (USA), Inc.

Pipe Package for 2-way PICCVs

BELIMO

Union Technical Specifications

Service	chilled or hot water, 60% glycol
Sizes	½", ¾", 1", 1¼", 1½", 2"
Materials:	
Body	forged brass
Union Nut	forged brass
Tailpiece	forged brass
Gasket	EPDM
Insulator	glass reinforced nylon (dielectric)
Readout port body & cap	extruded brass
Readout port seal	Nordel
Pressure/temperature ratings:	
½" to 2"	400 psi
Component temp.	250°F maximum
Media temp. range	0°F to 212°F [-18°C to +100°C]

Isolation Valve Technical Specifications

Service	chilled or hot water, 60% glycol
Sizes	½", ¾", 1", 1¼", 1½", 2"
Materials:	
Body	forged brass
Gland Nut	extruded brass
Ball	chrome plated/hot forged brass
Stem	extruded brass
Union Nut	forged brass
Tailpiece	forged brass
Seats	Virgin PTFE
Packing	Virgin PTFE
Stem O-Rings	Viton
Readout port body & cap	extruded brass
Readout port seal	Nordel
Pressure/temperature ratings:	
½" to ¾"	600 psi
1" to 2"	500 psi
Component temp.	300°F maximum
Media temp. range	0°F to 212°F [-18°C to +100°C]
Leakage	0%

Strainer Technical Specifications

Service	chilled or hot water, 60% glycol
Sizes	½", ¾", 1", 1¼", 1½", 2"
Materials:	
Body	forged brass
Union Nut	forged brass
Ball	chrome plated/forged brass
Stem & Gland Nut	forged brass
Tailpiece	forged brass
Seals & Packing	PTFE
Stem O-Rings	Viton
Strainer Screen	304 stainless steel / 20 mesh standard
Readout port body & cap	extruded brass
Readout port seal	Nordel
Pressure/temperature ratings:	
½" to 2"	600 psi
Component temp.	325°F maximum
Media temp. range	0°F to 212°F [-18°C to +100°C]
Leakage	0%

Please Note: PICCV packages have a 5-year warranty. Minimum 75% restock fee pending inspection.

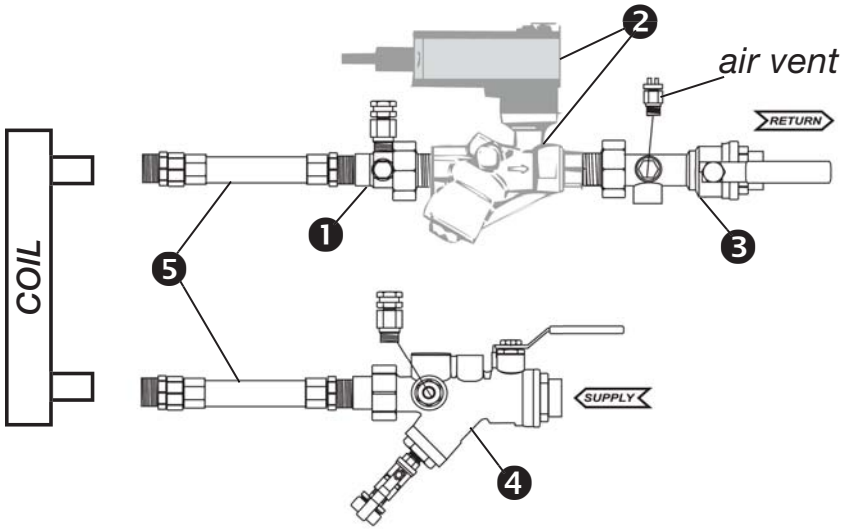

PICCV (½" to 2") Return Side Package (Standard)

❶ Union
❷ Belimo Valve and Actuator (Not Included in Smart Code or List Price)
❸ Isolation Valve
❹ Strainer or Isolation Valve (Strainer Shown)
❺ Optional hoses are available

Supply Side Packages Feature the Belimo Control Valve on the Supply Side of the Coil and Above Components Arranged in a Supply Configuration. Refer to Software for Supply Side Configurations.

Hose Technical Specifications

External Braiding	stainless steel AISI 304
Crimping Ferrules	stainless steel AISI 304
Connectors	machined brass
Fiber Gasket	BA-U fiber washer
Core	formulated EPDM
Operating & Burst Pressure Rating	
1/2"	375 psi operating 1500 psi burst pressure
3/4"	300 psi operating 1200 psi burst pressure
1"	225 psi operating 900 psi burst pressure
1 1/4"	200 psi operating 800 psi burst pressure
1 1/2"	175 psi operating 600 psi burst pressure
2"	150 psi operating 500 burst pressure
Component temp.	5°F to 230°F [-15°C to +110°C] Less than 41°F with use of Glycol additive.

Note: Media temperature may be limited by the hose rating

067001 - 04/13 - Subject to change. © Belimo Aircontrols (USA), Inc.



5 YEAR WARRANTY

SMARTCODE ORDER NOMENCLATURE
COMPONENT ORDER NOMENCLATURE

EXAMPLE: PP-PICCV	PP	211	2110	2111	3
		Union PPU211	Isolation PPV2110	Strainer PPS2111	Hose PHOSE3



Extension Packages Include:

- **Extended handle for Isolation Valve and Strainer**
- **Extended P/T port for Union, Isolation Valve and Strainer**
- **Extended air vent for Isolation Valve**

PIPE PACKAGE SMARTCODE (PICCV)			UNION	ISOLATION VALVE	STRAINER	LIST PRICE
Pipe Package Part # (2-way PICCV) without Hose	Valve Nominal Size Inches	DN (mm)	Body End/ Tailpiece End	Body End/ Tailpiece End	Body End/ Tailpiece End	
*PP 111 1110 1111 0	1/2	15	F-NPT/M-NPT	F-NPT/M-NPT	F-NPT/F-NPT	$338.00
PP 121 1210 1212 0	1/2	15	Sweat/M-NPT	Sweat/M-NPT	Sweat/Sweat	$338.00
PP 131 1110 1113 0	1/2	15	M-NPT/M-NPT	F-NPT/M-NPT	F-NPT/M-NPT	$338.00
PP 131 1210 1213 0	1/2	15	M-NPT/M-NPT	Sweat/M-NPT	Sweat/M-NPT	$338.00
PP 211 2110 2111 0	3/4	20	F-NPT/M-NPT	F-NPT/M-NPT	F-NPT/F-NPT	$400.00
PP 221 2210 2212 0	3/4	20	Sweat/M-NPT	Sweat/M-NPT	Sweat/Sweat	$400.00
PP 231 2110 2113 0	3/4	20	M-NPT/M-NPT	F-NPT/M-NPT	F-NPT/M-NPT	$400.00
PP 231 2210 2213 0	3/4	20	M-NPT/M-NPT	Sweat/M-NPT	Sweat/M-NPT	$400.00
PP 311 3110 3111 0	1	25	F-NPT/M-NPT	F-NPT/M-NPT	F-NPT/F-NPT	$508.00
PP 321 3210 3212 0	1	25	Sweat/M-NPT	Sweat/M-NPT	Sweat/Sweat	$508.00
PP 331 3110 3113 0	1	25	M-NPT/M-NPT	F-NPT/M-NPT	F-NPT/M-NPT	$508.00
PP 331 3210 3213 0	1	25	M-NPT/M-NPT	Sweat/M-NPT	Sweat/Sweat	$508.00

PIPE PACKAGE SMARTCODE (PICCV)			UNION	ISOLATION VALVE	STRAINER	LIST PRICE
Pipe Package Part # (2-way PICCV) with 12" Hose	Valve Nominal Size Inches	DN (mm)	Body End/ Tailpiece End	Body End/ Tailpiece End	Body End/ Tailpiece End	
PP 111 1110 1111 1	1/2	15	F-NPT/M-NPT	F-NPT/M-NPT	F-NPT/F-NPT	$441.00
PP 111 1210 1211 1	1/2	15	Sweat/M-NPT	Sweat/M-NPT	Sweat/F-NPT	$441.00
PP 211 2110 2111 3	3/4	20	F-NPT/M-NPT	F-NPT/M-NPT	F-NPT/F-NPT	$559.00
PP 211 2210 2211 3	3/4	20	F-NPT/M-NPT	Sweat/M-NPT	Sweat/F-NPT	$559.00
PP 311 3110 3111 5	1	25	F-NPT/M-NPT	F-NPT/M-NPT	F-NPT/F-NPT	$810.00
PP 311 3210 3211 5	1	25	F-NPT/M-NPT	Sweat/M-NPT	Sweat/F-NPT	$810.00

PIPE PACKAGE SMARTCODE (PICCV)			UNION	ISOLATION VALVE	STRAINER	LIST PRICE
Pipe Package Part # (2-way PICCV) with 24" hose	Valve Nominal Size Inches	DN (mm)	Body End/ Tailpiece End	Body End/ Tailpiece End	Body End/ Tailpiece End	
PP 111 1110 1111 2	1/2	15	F-NPT/M-NPT	F-NPT/M-NPT	F-NPT/F-NPT	$465.00
PP 111 1210 1211 2	1/2	15	Sweat/M-NPT	Sweat/M-NPT	Sweat/F-NPT	$465.00
PP 211 2110 2111 4	3/4	20	F-NPT/M-NPT	F-NPT/M-NPT	F-NPT/F-NPT	$604.00
PP 211 2210 2211 4	3/4	20	F-NPT/M-NPT	Sweat/M-NPT	Sweat/F-NPT	$604.00
PP 311 3110 3111 6	1	25	F-NPT/M-NPT	F-NPT/M-NPT	F-NPT/F-NPT	$859.00
PP 311 3210 3211 6	1	25	F-NPT/M-NPT	Sweat/M-NPT	Sweat/F-NPT	$859.00

All combinations of reorder numbers are not reflected above. Please use the nomenclature or download the software at www.belimo.us to configure other possible combinations.

067001 - 04/13 - Subject to change. © Belimo Aircontrols (USA), Inc.

Pipe Package for 2-way CCVs

Union Technical Specifications

Service	chilled or hot water, 60% glycol
Sizes	½", ¾", 1", 1¼", 1½", 2"
Materials:	
Body	forged brass
Union Nut	forged brass
Tailpiece	forged brass
Gasket	EPDM
Insulator	glass reinforced nylon (dielectric)
Readout port body & cap	extruded brass
Readout port seal	Nordel
Pressure/temperature ratings:	
½" to 2"	400 psi
Component temp.	250°F maximum
Media temp. range	0°F to 250°F [-18°C to +121°C]

Manual Balance Valve Technical Specifications

Service	chilled or hot water, 60% glycol
Sizes	½", ¾", 1", 1¼", 1½", 2"
Materials:	
Body	forged brass
Ball	chrome plated/forged brass
Stem	extruded brass
Union	forged brass
Tailpiece	forged brass
Gland Nut	extruded brass
Seats & Packing	Virgin PTFE
O-Rings	Viton
Venturi	extruded brass
Readout port body & cap	extruded brass
Readout port seal	Nordel
Memory Stop	forged brass
Pressure/temperature ratings:	
½" to 2"	400 psi
Component temp.	300°F maximum
Media temp. range	0°F to 250°F [-18°C to +121°C]
Leakage	0%

Strainer Technical Specifications

Service	chilled or hot water, 60% glycol
Sizes	½", ¾", 1", 1¼", 1½", 2"
Materials:	
Body	forged brass
Union Nut	forged brass
Ball	chrome plated/forged brass
Stem & Gland Nut	forged brass
Tailpiece	forged brass
Seals & Packing	PTFE
Stem O-Rings	Viton
Strainer Screen	304 stainless steel / 20 mesh standard
Readout port body & cap	extruded brass
Readout port seal	Nordel
Pressure/temperature ratings:	
½" to 2"	600 psi
Component temp.	325°F maximum
Media temp. range	0°F to 250°F [-18°C to +121°C]
Leakage	0%

Please Note: 2-way CCV Pipe Packages have a 5-year warranty. Minimum 75% restock fee pending inspection.

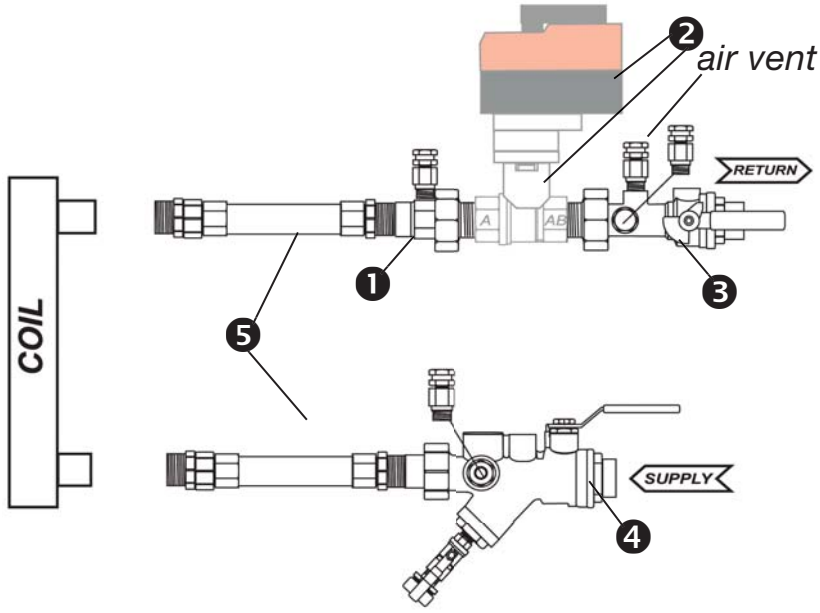

2-way CCV (½" to 2") Return Side Package (Standard)

❶ Union
❷ Belimo Valve and Actuator (Not Included in Smart Code or List Price)
❸ Manual Balance Valve
❹ Strainer
❺ Optional hoses are available

Supply Side Packages Feature the Belimo Control Valve on the Supply Side of the Coil and Above Components Arranged in a Supply Configuration. Refer to Software for Supply Side Configurations.

Hose Technical Specifications

External Braiding	stainless steel AISI 304
Crimping Ferrules	stainless steel AISI 304
Connectors	machined brass
Fiber Gasket	BA-U fiber washer
Core	formulated EPDM
Operating & Burst Pressure Rating	
1/2"	375 psi operating 1500 psi burst pressure
3/4"	300 psi operating 1200 psi burst pressure
1"	225 psi operating 900 psi burst pressure
1 1/4"	200 psi operating 800 psi burst pressure
1 1/2"	175 psi operating 600 psi burst pressure
2"	150 psi operating 500 burst pressure
Component temp.	5°F to 230°F [-15°C to +110°C] Less than 41°F with use of Glycol additive.

Note: Media temperature may be limited by the hose rating

067001 - 04/13 - Subject to change. © Belimo Aircontrols (USA), Inc.

Pipe Package for 2-way CCVs



5 YEAR WARRANTY

SMARTCODE ORDER NOMENCLATURE
COMPONENT ORDER NOMENCLATURE

EXAMPLE: P2	111	1111	1111	1
	Union PPU111	MBV PPL1111	Strainer PPS1111	Hose PHOSE1



Extension Packages Include:

- **Extended handle for Manual Balance Valve, Isolation Valve and Strainer**
- **Extended P/T ports for Union, Manual Balance Valve, Strainer or Isolation Valve**
- **Extended air vent for Manual Balance Valve and Isolation Valve**

PIPE PACKAGE SMARTCODE (CCV)			UNION	MANUAL BALANCE VALVE	STRAINER	LIST PRICE
Pipe Package Model # (2-way CCV) without hose	Valve Nominal Size Inches	DN (mm)	Body End/ Tailpiece End	Body End/ Tailpiece End	Body End/ Tailpiece End	
P2 111 1111 1111 0	1/2	15	F-NPT/M-NPT	F-NPT/M-NPT	F-NPT/F-NPT	$418.00
P2 121 1112 1212 0	1/2	15	Sweat/M-NPT	F-NPT/M-NPT	Sweat/Sweat	$418.00
P2 131 1113 1113 0	1/2	15	M-NPT/M-NPT	F-NPT/M-NPT	F-NPT/M-NPT	$418.00
P2 131 1211 1213 0	1/2	15	M-NPT/M-NPT	Sweat/M-NPT	Sweat/M-NPT	$418.00
P2 131 1212 1213 0	1/2	15	M-NPT/M-NPT	Sweat/M-NPT	Sweat/M-NPT	$418.00
P2 131 1213 1213 0	1/2	15	M-NPT/M-NPT	Sweat/M-NPT	Sweat/M-NPT	$418.00
P2 211 2111 2111 0	3/4	20	F-NPT/M-NPT	F-NPT/M-NPT	F-NPT/F-NPT	$467.00
P2 221 2112 2212 0	3/4	20	Sweat/M-NPT	F-NPT/M-NPT	Sweat/Sweat	$467.00
P2 231 2113 2113 0	3/4	20	M-NPT/M-NPT	F-NPT/M-NPT	F-NPT/M-NPT	$467.00
P2 231 2211 2213 0	3/4	20	M-NPT/M-NPT	Sweat/M-NPT	Sweat/M-NPT	$467.00
P2 231 2212 2213 0	3/4	20	M-NPT/M-NPT	Sweat/M-NPT	Sweat/M-NPT	$467.00
P2 231 2213 2213 0	3/4	20	M-NPT/M-NPT	Sweat/M-NPT	Sweat/M-NPT	$467.00
P2 311 3114 3111 0	1	25	F-NPT/M-NPT	F-NPT/M-NPT	F-NPT/F-NPT	$610.00
P2 321 3114 3212 0	1	25	Sweat/M-NPT	F-NPT/M-NPT	Sweat/Sweat	$610.00
P2 331 3115 3113 0	1	25	M-NPT/M-NPT	F-NPT/M-NPT	F-NPT/M-NPT	$610.00
P2 311 3115 3213 0	1	25	F-NPT/M-NPT	F-NPT/M-NPT	Sweat/M-NPT	$610.00
P2 321 3214 3213 0	1	25	Sweat/M-NPT	Sweat/M-NPT	Sweat/M-NPT	$610.00
P2 331 3215 3213 0	1	25	M-NPT/M-NPT	Sweat/M-NPT	Sweat/M-NPT	$610.00

PIPE PACKAGE SMARTCODE (CCV)			UNION	MANUAL BALANCE VALVE	STRAINER	LIST PRICE
Pipe Package Model # (2-way CCV) with 12" hose	Valve Nominal Size Inches	DN (mm)	Body End/ Tailpiece End	Body End/ Tailpiece End	Body End/ Tailpiece End	
P2 111 1111 1111 1	1/2	15	F-NPT/M-NPT	F-NPT/M-NPT	F-NPT/F-NPT	$520.00
P2 111 1112 1211 1	1/2	15	F-NPT/M-NPT	F-NPT/M-NPT	Sweat/F-NPT	$520.00
P2 111 1113 1111 1	1/2	15	F-NPT/M-NPT	F-NPT/M-NPT	F-NPT/F-NPT	$520.00
P2 111 1211 1211 1	1/2	15	F-NPT/M-NPT	Sweat/M-NPT	Sweat/F-NPT	$520.00
P2 111 1212 1111 1	1/2	15	F-NPT/M-NPT	Sweat/M-NPT	F-NPT/F-NPT	$520.00
P2 111 1213 1211 1	1/2	15	F-NPT/M-NPT	Sweat/M-NPT	Sweat/F-NPT	$520.00
P2 211 2111 2111 3	3/4	20	F-NPT/M-NPT	F-NPT/M-NPT	F-NPT/F-NPT	$626.00
P2 211 2112 2211 3	3/4	20	F-NPT/M-NPT	F-NPT/M-NPT	Sweat/F-NPT	$626.00
P2 211 2113 2111 3	3/4	20	F-NPT/M-NPT	F-NPT/M-NPT	F-NPT/F-NPT	$626.00
P2 211 2211 2211 3	3/4	20	F-NPT/M-NPT	Sweat/M-NPT	Sweat/F-NPT	$626.00
P2 211 2212 2111 3	3/4	20	F-NPT/M-NPT	Sweat/M-NPT	F-NPT/F-NPT	$626.00
P2 211 2213 2211 3	3/4	20	F-NPT/M-NPT	Sweat/M-NPT	Sweat/F-NPT	$626.00
P2 311 3114 3111 5	1	25	F-NPT/M-NPT	F-NPT/M-NPT	F-NPT/F-NPT	$918.00
P2 311 3115 3211 5	1	25	F-NPT/M-NPT	F-NPT/M-NPT	Sweat/F-NPT	$918.00
P2 311 3214 3111 5	1	25	F-NPT/M-NPT	Sweat/M-NPT	F-NPT/F-NPT	$918.00
P2 311 3215 3211 5	1	25	F-NPT/M-NPT	Sweat/M-NPT	Sweat/F-NPT	$918.00

PIPE PACKAGE SMARTCODE (CCV)			UNION	MANUAL BALANCE VALVE	STRAINER	LIST PRICE
Pipe Package Model # (2-way CCV) with 24" hose	Valve Nominal Size Inches	DN (mm)	Body End/ Tailpiece End	Body End/ Tailpiece End	Body End/ Tailpiece End	
P2 111 1111 1111 2	1/2	15	F-NPT/M-NPT	F-NPT/M-NPT	F-NPT/F-NPT	$544.00
P2 111 1112 1211 2	1/2	15	F-NPT/M-NPT	F-NPT/M-NPT	Sweat/F-NPT	$544.00
P2 111 1113 1111 2	1/2	15	F-NPT/M-NPT	F-NPT/M-NPT	F-NPT/F-NPT	$544.00
P2 111 1211 1211 2	1/2	15	F-NPT/M-NPT	Sweat/M-NPT	Sweat/F-NPT	$544.00
P2 111 1212 1111 2	1/2	15	F-NPT/M-NPT	Sweat/M-NPT	F-NPT/F-NPT	$544.00
P2 111 1213 1211 2	1/2	15	F-NPT/M-NPT	Sweat/M-NPT	Sweat/F-NPT	$544.00
P2 211 2111 2111 4	3/4	20	F-NPT/M-NPT	F-NPT/M-NPT	F-NPT/F-NPT	$671.00
P2 211 2112 2211 4	3/4	20	F-NPT/M-NPT	F-NPT/M-NPT	Sweat/F-NPT	$671.00
P2 211 2113 2111 4	3/4	20	F-NPT/M-NPT	F-NPT/M-NPT	F-NPT/F-NPT	$671.00
P2 211 2211 2211 4	3/4	20	F-NPT/M-NPT	Sweat/M-NPT	Sweat/F-NPT	$671.00
P2 211 2212 2111 4	3/4	20	F-NPT/M-NPT	Sweat/M-NPT	F-NPT/F-NPT	$671.00
P2 211 2213 2211 4	3/4	20	F-NPT/M-NPT	Sweat/M-NPT	Sweat/F-NPT	$671.00
P2 311 3114 3111 6	1	25	F-NPT/M-NPT	F-NPT/M-NPT	F-NPT/F-NPT	$967.00
P2 311 3115 3211 6	1	25	F-NPT/M-NPT	F-NPT/M-NPT	Sweat/F-NPT	$967.00
P2 311 3214 3111 6	1	25	F-NPT/M-NPT	Sweat/M-NPT	F-NPT/F-NPT	$967.00
P2 311 3215 3211 6	1	25	F-NPT/M-NPT	Sweat/M-NPT	Sweat/F-NPT	$967.00

All combinations of reorder numbers are not reflected above. Please use the nomenclature or download the software at www.belimo.us to configure other possible combinations.

067001 - 04/13 - Subject to change. © Belimo Aircontrols (USA), Inc.

Pipe Package for 3-way CCVs

Union Technical Specifications

Service	chilled or hot water, 60% glycol
Sizes	½", ¾", 1", 1¼", 1½", 2"
Materials:	
Body	forged brass
Union Nut	forged brass
Tailpiece	forged brass
Gasket	EPDM
Insulator	glass reinforced nylon (dielectric)
Readout port body & cap	extruded brass
Readout port seal	Nordel
Pressure/temperature ratings:	
½" to 2"	400 psi
Component temp.	250°F maximum
Media temp. range	0°F to 250°F [-18°C to +121°C]

Manual Balance Valve Technical Specifications

Service	chilled or hot water, 60% glycol
Sizes	½", ¾", 1", 1¼", 1½", 2"
Materials:	
Body	forged brass
Ball	chrome plated/forged brass
Stem	extruded brass
Union	forged brass
Tailpiece	forged brass
Gland Nut	extruded brass
Seats & Packing	Virgin PTFE
O-Rings	Viton
Venturi	extruded brass
Readout port body & cap	extruded brass
Readout port seal	Nordel
Memory Stop	forged brass
Pressure/temperature ratings:	
½" to 2"	400 psi
Component temp.	300°F maximum
Media temp. range	0°F to 250°F [-18°C to +121°C]
Leakage	0%

Strainer Technical Specifications

Service	chilled or hot water, 60% glycol
Sizes	½", ¾", 1", 1¼", 1½", 2"
Materials:	
Body	forged brass
Union Nut	forged brass
Ball	chrome plated/forged brass
Stem & Gland Nut	forged brass
Tailpiece	forged brass
Seals & Packing	PTFE
Stem O-Rings	Viton
Strainer Screen	304 stainless steel / 20 mesh standard
Readout port body & cap	extruded brass
Readout port seal	Nordel
Pressure/temperature ratings:	
½" to 2"	600 psi
Component temp.	325°F maximum
Media temp. range	0°F to 250°F [-18°C to +121°C]
Leakage	0%

Please Note: 2-way CCV Pipe Packages have a 5-year warranty. Minimum 75% restock fee pending inspection.

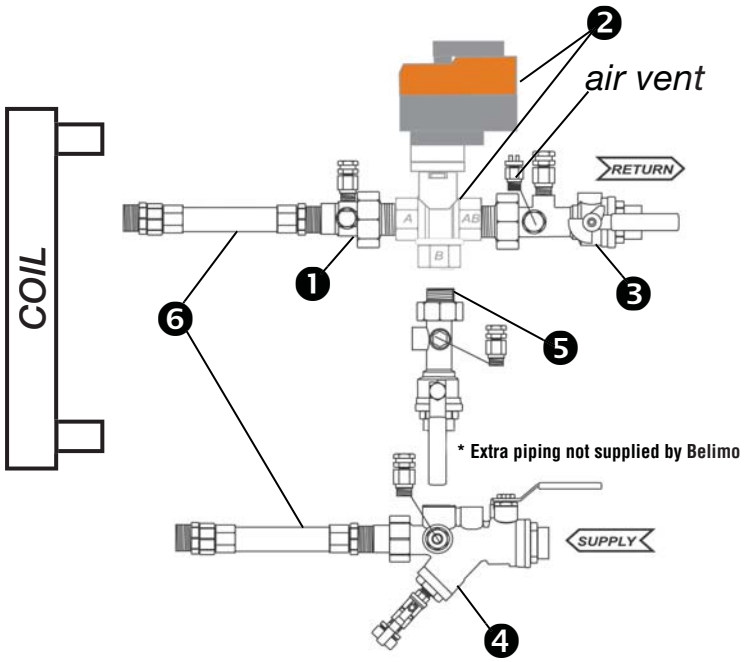

3-way CCV (½" to 2") Return Side Package (Standard)

❶ Union
❷ Belimo Valve and Actuator (Not Included in Smart Code or List Price)
❸ Manual Balance Valve
❹ Strainer
❺ Isolation Valve
❻ Optional hoses are available

*Note: Extra piping for Isolation Valve to CCV and Strainer is required (not supplied).

Supply Side Packages Feature the Belimo Control Valve on the Supply Side of the Coil and Above Components Arranged in a Supply Configuration. Refer to Software for Supply Side Configurations.

Isolation Valve Technical Specifications

Service	chilled or hot water, 60% glycol
Sizes	½", ¾", 1", 1¼", 1½", 2"
Materials:	
Body	forged brass
Gland Nut	extruded brass
Ball	chrome plated/hot forged brass
Stem	extruded brass
Union Nut	forged brass
Tailpiece	forged brass
Seats	Virgin PTFE
Packing	Virgin PTFE
Stem O-Rings	Viton
Readout port body & cap	extruded brass
Readout port seal	Nordel
Pressure/temperature ratings:	
½" to ¾"	600 psi
1" to 2"	500 psi
Component temp.	300°F maximum
Media temp. range	0°F to 212°F [-18°C to +100°C]
Leakage	0%

Hose Technical Specifications

External Braiding	stainless steel AISI 304
Crimping Ferrules	stainless steel AISI 304
Connectors	machined brass
Fiber Gasket	BA-U fiber washer
Core	formulated EPDM
Operating & Burst Pressure Rating	
1/2"	375 psi operating 1500 psi burst pressure
3/4"	300 psi operating 1200 psi burst pressure
1"	225 psi operating 900 psi burst pressure
1 1/4"	200 psi operating 800 psi burst pressure
1 1/2"	175 psi operating 600 psi burst pressure
2"	150 psi operating 500 burst pressure
Component temp.	5°F to 230°F [-15°C to +110°C] Less than 41°F with use of Glycol additive.

Note: Media temperature may be limited by the hose rating

067001 - 04/13 - Subject to change. © Belimo Aircontrols (USA), Inc.



5 YEAR WARRANTY

SMARTCODE ORDER NOMENCLATURE
COMPONENT ORDER NOMENCLATURE

EXAMPLE: P3	311	3114	3111	5
	Union PPU311	MBV PPL3114	Strainer PPS3111	Hose PHOSE5



Extension Packages Include:

- **Extended handle for Manual Balance Valve, Isolation Valve and Strainer**
- **Extended P/T ports for Union, Manual Balance Valve, Strainer or Isolation Valve**
- **Extended air vent for Manual Balance Valve and Isolation Valve**

PIPE PACKAGE SMARTCODE (CCV)			UNION	MANUAL BALANCE VALVE	STRAINER	LIST PRICE
Pipe Package Model # (3-way CCV) without hose	Valve Nominal Size Inches	DN (mm)	Body End/ Tailpiece End	Body End/ Tailpiece End	Body End/ Tailpiece End	
P3 111 1111 1111 0	1/2	15	F-NPT/M-NPT	F-NPT/M-NPT	F-NPT/F-NPT	$534.00
P3 121 1112 1212 0	1/2	15	Sweat/M-NPT	F-NPT/M-NPT	Sweat/Sweat	$534.00
P3 131 1113 1113 0	1/2	15	M-NPT/M-NPT	F-NPT/M-NPT	F-NPT/M-NPT	$534.00
P3 131 1211 1213 0	1/2	15	M-NPT/M-NPT	Sweat/M-NPT	Sweat/M-NPT	$534.00
P3 131 1212 1213 0	1/2	15	M-NPT/M-NPT	Sweat/M-NPT	Sweat/M-NPT	$534.00
P3 131 1213 1213 0	1/2	15	M-NPT/M-NPT	Sweat/M-NPT	Sweat/M-NPT	$534.00
P3 211 2111 2111 0	3/4	20	F-NPT/M-NPT	F-NPT/M-NPT	F-NPT/F-NPT	$600.00
P3 221 2112 2212 0	3/4	20	Sweat/M-NPT	F-NPT/M-NPT	Sweat/Sweat	$600.00
P3 231 2113 2113 0	3/4	20	M-NPT/M-NPT	F-NPT/M-NPT	F-NPT/M-NPT	$600.00
P3 231 2211 2213 0	3/4	20	M-NPT/M-NPT	Sweat/M-NPT	Sweat/M-NPT	$600.00
P3 231 2212 2213 0	3/4	20	M-NPT/M-NPT	Sweat/M-NPT	Sweat/M-NPT	$600.00
P3 231 2213 2213 0	3/4	20	M-NPT/M-NPT	Sweat/M-NPT	Sweat/M-NPT	$600.00
P3 311 3114 3111 0	1	25	F-NPT/M-NPT	F-NPT/M-NPT	F-NPT/F-NPT	$812.00
P3 321 3114 3212 0	1	25	Sweat/M-NPT	F-NPT/M-NPT	Sweat/Sweat	$812.00
P3 331 3115 3113 0	1	25	M-NPT/M-NPT	F-NPT/M-NPT	F-NPT/M-NPT	$812.00
P3 311 3115 3213 0	1	25	F-NPT/M-NPT	F-NPT/M-NPT	Sweat/M-NPT	$812.00
P3 321 3214 3213 0	1	25	Sweat/M-NPT	Sweat/M-NPT	Sweat/M-NPT	$812.00
P3 331 3215 3213 0	1	25	M-NPT/M-NPT	Sweat/M-NPT	Sweat/M-NPT	$812.00

PIPE PACKAGE SMARTCODE (CCV)			UNION	MANUAL BALANCE VALVE	STRAINER	LIST PRICE
Pipe Package Model # (3-way CCV) with 12" hose	Valve Nominal Size Inches	DN (mm)	Body End/ Tailpiece End	Body End/ Tailpiece End	Body End/ Tailpiece End	
P3 111 1111 1111 1	1/2	15	F-NPT/M-NPT	F-NPT/M-NPT	F-NPT/F-NPT	$636.00
P3 111 1112 1211 1	1/2	15	F-NPT/M-NPT	F-NPT/M-NPT	Sweat/F-NPT	$636.00
P3 111 1113 1111 1	1/2	15	F-NPT/M-NPT	F-NPT/M-NPT	F-NPT/F-NPT	$636.00
P3 111 1211 1211 1	1/2	15	F-NPT/M-NPT	Sweat/M-NPT	Sweat/F-NPT	$636.00
P3 111 1212 1111 1	1/2	15	F-NPT/M-NPT	Sweat/M-NPT	F-NPT/F-NPT	$636.00
P3 111 1213 1211 1	1/2	15	F-NPT/M-NPT	Sweat/M-NPT	Sweat/F-NPT	$636.00
P3 211 2111 2111 3	3/4	20	F-NPT/M-NPT	F-NPT/M-NPT	F-NPT/F-NPT	$759.00
P3 211 2112 2211 3	3/4	20	F-NPT/M-NPT	F-NPT/M-NPT	Sweat/F-NPT	$759.00
P3 211 2113 2111 3	3/4	20	F-NPT/M-NPT	F-NPT/M-NPT	F-NPT/F-NPT	$759.00
P3 211 2211 2211 3	3/4	20	F-NPT/M-NPT	Sweat/M-NPT	Sweat/F-NPT	$759.00
P3 211 2212 2111 3	3/4	20	F-NPT/M-NPT	Sweat/M-NPT	F-NPT/F-NPT	$759.00
P3 211 2213 2211 3	3/4	20	F-NPT/M-NPT	Sweat/M-NPT	Sweat/F-NPT	$759.00
P3 311 3114 3111 5	1	25	F-NPT/M-NPT	F-NPT/M-NPT	F-NPT/F-NPT	$1,114.00
P3 311 3115 3211 5	1	25	F-NPT/M-NPT	F-NPT/M-NPT	Sweat/F-NPT	$1,114.00
P3 311 3214 3111 5	1	25	F-NPT/M-NPT	Sweat/M-NPT	F-NPT/F-NPT	$1,114.00
P3 311 3215 3211 5	1	25	F-NPT/M-NPT	Sweat/M-NPT	Sweat/F-NPT	$1,114.00

PIPE PACKAGE SMARTCODE (CCV)			UNION	MANUAL BALANCE VALVE	STRAINER	LIST PRICE
Pipe Package Model # (3-way CCV) with 24" hose	Valve Nominal Size Inches	DN (mm)	Body End/ Tailpiece End	Body End/ Tailpiece End	Body End/ Tailpiece End	
P3 111 1111 1111 2	1/2	15	F-NPT/M-NPT	F-NPT/M-NPT	F-NPT/F-NPT	$661.00
P3 111 1112 1211 2	1/2	15	F-NPT/M-NPT	F-NPT/M-NPT	Sweat/F-NPT	$661.00
P3 111 1113 1111 2	1/2	15	F-NPT/M-NPT	F-NPT/M-NPT	F-NPT/F-NPT	$661.00
P3 111 1211 1211 2	1/2	15	F-NPT/M-NPT	Sweat/M-NPT	Sweat/F-NPT	$661.00
P3 111 1212 1111 2	1/2	15	F-NPT/M-NPT	Sweat/M-NPT	F-NPT/F-NPT	$661.00
P3 111 1213 1211 2	1/2	15	F-NPT/M-NPT	Sweat/M-NPT	Sweat/F-NPT	$661.00
P3 211 2111 2111 4	3/4	20	F-NPT/M-NPT	F-NPT/M-NPT	F-NPT/F-NPT	$804.00
P3 211 2112 2211 4	3/4	20	F-NPT/M-NPT	F-NPT/M-NPT	Sweat/F-NPT	$804.00
P3 211 2113 2111 4	3/4	20	F-NPT/M-NPT	F-NPT/M-NPT	F-NPT/F-NPT	$804.00
P3 211 2211 2211 4	3/4	20	F-NPT/M-NPT	Sweat/M-NPT	Sweat/F-NPT	$804.00
P3 211 2212 2111 4	3/4	20	F-NPT/M-NPT	Sweat/M-NPT	F-NPT/F-NPT	$804.00
P3 211 2213 2211 4	3/4	20	F-NPT/M-NPT	Sweat/M-NPT	Sweat/F-NPT	$804.00
P3 311 3114 3111 6	1	25	F-NPT/M-NPT	F-NPT/M-NPT	F-NPT/F-NPT	$1,163.00
P3 311 3115 3211 6	1	25	F-NPT/M-NPT	F-NPT/M-NPT	Sweat/F-NPT	$1,163.00
P3 311 3214 3111 6	1	25	F-NPT/M-NPT	Sweat/M-NPT	F-NPT/F-NPT	$1,163.00
P3 311 3215 3211 6	1	25	F-NPT/M-NPT	Sweat/M-NPT	Sweat/F-NPT	$1,163.00

All combinations of reorder numbers are not reflected above. Please use the nomenclature or download the software at www.belimo.us to configure other possible combinations.

067001 - 04/13 - Subject to change. © Belimo Aircontrols (USA), Inc.

Pipe Package for Zone Valves

Union Technical Specifications

Service	chilled or hot water, 60% glycol
Sizes	½", ¾", 1", 1¼", 1½", 2"
Materials:	
Body	forged brass
Union Nut	forged brass
Tailpiece	forged brass
Gasket	EPDM
Insulator	glass reinforced nylon (dielectric)
Readout port body & cap	extruded brass
Readout port seal	Nordel
Pressure/temperature ratings:	
½" to 2"	400 psi
Component temp.	250°F maximum
Media temp. range	32°F to 212°F [0°C to +100°C]

Manual Balance Valve Technical Specifications

Service	chilled or hot water, 60% glycol
Sizes	½", ¾", 1", 1¼", 1½", 2"
Materials:	
Body	forged brass
Ball	chrome plated/forged brass
Stem	extruded brass
Union	forged brass
Tailpiece	forged brass
Gland Nut	extruded brass
Seats & Packing	Virgin PTFE
O-Rings	Viton
Venturi	extruded brass
Readout port body & cap	extruded brass
Readout port seal	Nordel
Memory Stop	forged brass
Pressure/temperature ratings:	
½" to 2"	400 psi
Component temp.	300°F maximum
Media temp. range	32°F to 212°F [0°C to +100°C]
Leakage	0%

Strainer Technical Specifications

Service	chilled or hot water, 60% glycol
Sizes	½", ¾", 1", 1¼", 1½", 2"
Materials:	
Body	forged brass
Union Nut	forged brass
Ball	chrome plated/forged brass
Stem & Gland Nut	forged brass
Tailpiece	forged brass
Seals & Packing	PTFE
Stem O-Rings	Viton
Strainer Screen	304 stainless steel / 20 mesh standard
Readout port body & cap	extruded brass
Readout port seal	Nordel
Pressure/temperature ratings:	
½" to 2"	600 psi
Component temp.	325°F maximum
Media temp. range	32°F to 212°F [0°C to +100°C]
Leakage	0%

Please Note: 2-way Zone Valve Pipe Packages have a 2-year warranty. Minimum 75% restock fee pending inspection.

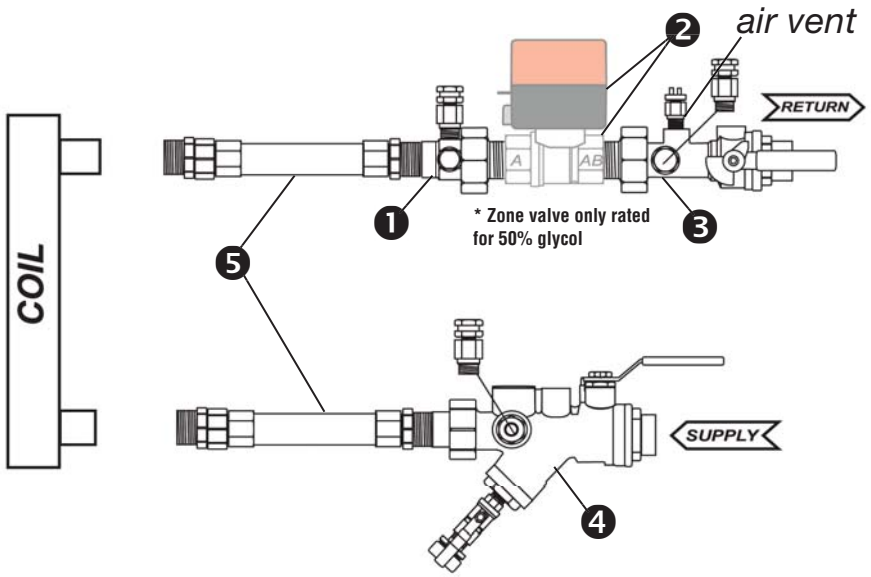

2-way Zone Valve (½" to 1" NPT)
Return Side Package (Standard)

❶ Union
❷ Belimo Valve and Actuator (Not Included in Smart Code or List Price)
❸ Manual Balance Valve
❹ Strainer
❺ Optional hoses are available

Supply Side Packages Feature the Belimo Control Valve on the Supply Side of the Coil and Above Components Arranged in a Supply Configuration. Refer to Software for Supply Side Configurations.

Hose Technical Specifications

External Braiding	stainless steel AISI 304
Crimping Ferrules	stainless steel AISI 304
Connectors	machined brass
Fiber Gasket	BA-U fiber washer
Core	formulated EPDM
Operating & Burst Pressure Rating	
1/2"	375 psi operating 1500 psi burst pressure
3/4"	300 psi operating 1200 psi burst pressure
1"	225 psi operating 900 psi burst pressure
1 1/4"	200 psi operating 800 psi burst pressure
1 1/2"	175 psi operating 600 psi burst pressure
2"	150 psi operating 500 burst pressure
Component temp.	5°F to 230°F [-15°C to +110°C] Less than 41°F with use of Glycol additive.

Note: Media temperature may be limited by the hose rating

067001 - 04/13 - Subject to change. © Belimo Aircontrols (USA), Inc.



2 YEAR WARRANTY

SMARTCODE ORDER NOMENCLATURE
COMPONENT ORDER NOMENCLATURE

EXAMPLE: PP2	111	1111	1111	0
	Union PPU111	MBV PPL1111	Strainer PPS1111	No Hose



Extension Packages Include:

- **Extended handle for Manual Balance Valve, Isolation Valve and Strainer**
- **Extended P/T ports for Union, Manual Balance Valve, Strainer or Isolation Valve**
- **Extended air vent for Manual Balance Valve and Isolation Valve**

PIPE PACKAGE SMARTCODE (ZONE)			UNION	MANUAL BALANCE VALVE	STRAINER	LIST PRICE
Pipe Package Model # (2-way Zone) without hose	Valve Nominal Size Inches	DN (mm)	Body End/ Tailpiece End	Body End/ Tailpiece End	Body End/ Tailpiece End	
PZ 111 1111 1111 0	1/2	15	F-NPT/M-NPT	F-NPT/M-NPT	F-NPT/F-NPT	$418.00
PZ 121 1112 1212 0	1/2	15	Sweat/M-NPT	F-NPT/M-NPT	Sweat/Sweat	$418.00
PZ 131 1113 1113 0	1/2	15	M-NPT/M-NPT	F-NPT/M-NPT	F-NPT/M-NPT	$418.00
PZ 131 1211 1213 0	1/2	15	M-NPT/M-NPT	Sweat/M-NPT	Sweat/M-NPT	$418.00
PZ 131 1212 1213 0	1/2	15	M-NPT/M-NPT	Sweat/M-NPT	Sweat/M-NPT	$418.00
PZ 131 1213 1213 0	1/2	15	M-NPT/M-NPT	Sweat/M-NPT	Sweat/M-NPT	$418.00
PZ 211 2111 2111 0	3/4	20	F-NPT/M-NPT	F-NPT/M-NPT	F-NPT/F-NPT	$467.00
PZ 221 2112 2212 0	3/4	20	Sweat/M-NPT	F-NPT/M-NPT	Sweat/Sweat	$467.00
PZ 231 2113 2113 0	3/4	20	M-NPT/M-NPT	F-NPT/M-NPT	F-NPT/M-NPT	$467.00
PZ 231 2211 2213 0	3/4	20	M-NPT/M-NPT	Sweat/M-NPT	Sweat/M-NPT	$467.00
PZ 231 2212 2213 0	3/4	20	M-NPT/M-NPT	Sweat/M-NPT	Sweat/M-NPT	$467.00
PZ 231 2213 2213 0	3/4	20	M-NPT/M-NPT	Sweat/M-NPT	Sweat/M-NPT	$467.00
PZ 311 3114 3111 0	1	25	F-NPT/M-NPT	F-NPT/M-NPT	F-NPT/F-NPT	$614.00
PZ 321 3114 3212 0	1	25	Sweat/M-NPT	F-NPT/M-NPT	Sweat/Sweat	$614.00
PZ 331 3115 3113 0	1	25	M-NPT/M-NPT	F-NPT/M-NPT	F-NPT/M-NPT	$614.00
PZ 311 3115 3213 0	1	25	F-NPT/M-NPT	F-NPT/M-NPT	Sweat/M-NPT	$614.00
PZ 321 3214 3213 0	1	25	Sweat/M-NPT	Sweat/M-NPT	Sweat/M-NPT	$614.00
PZ 331 3215 3213 0	1	25	M-NPT/M-NPT	Sweat/M-NPT	Sweat/M-NPT	$614.00

PIPE PACKAGE SMARTCODE (ZONE)			UNION	MANUAL BALANCE VALVE	STRAINER	LIST PRICE
Pipe Package Model # (2-way Zone) with 12" hose	Valve Nominal Size Inches	DN (mm)	Body End/ Tailpiece End	Body End/ Tailpiece End	Body End/ Tailpiece End	
PZ 111 1111 1111 1	1/2	15	F-NPT/M-NPT	F-NPT/M-NPT	F-NPT/F-NPT	$520.00
PZ 111 1112 1211 1	1/2	15	F-NPT/M-NPT	F-NPT/M-NPT	Sweat/F-NPT	$520.00
PZ 111 1113 1111 1	1/2	15	F-NPT/M-NPT	F-NPT/M-NPT	F-NPT/F-NPT	$520.00
PZ 111 1211 1211 1	1/2	15	F-NPT/M-NPT	Sweat/M-NPT	Sweat/F-NPT	$520.00
PZ 111 1212 1111 1	1/2	15	F-NPT/M-NPT	Sweat/M-NPT	F-NPT/F-NPT	$520.00
PZ 111 1213 1211 1	1/2	15	F-NPT/M-NPT	Sweat/M-NPT	Sweat/F-NPT	$520.00
PZ 211 2111 2111 3	3/4	20	F-NPT/M-NPT	F-NPT/M-NPT	F-NPT/F-NPT	$626.00
PZ 211 2112 2211 3	3/4	20	F-NPT/M-NPT	F-NPT/M-NPT	Sweat/F-NPT	$626.00
PZ 211 2113 2111 3	3/4	20	F-NPT/M-NPT	F-NPT/M-NPT	F-NPT/F-NPT	$626.00
PZ 211 2211 2211 3	3/4	20	F-NPT/M-NPT	Sweat/M-NPT	Sweat/F-NPT	$626.00
PZ 211 2212 2111 3	3/4	20	F-NPT/M-NPT	Sweat/M-NPT	F-NPT/F-NPT	$626.00
PZ 211 2213 2211 3	3/4	20	F-NPT/M-NPT	Sweat/M-NPT	Sweat/F-NPT	$626.00
PZ 311 3114 3111 5	1	25	F-NPT/M-NPT	F-NPT/M-NPT	F-NPT/F-NPT	$918.00
PZ 311 3115 3211 5	1	25	F-NPT/M-NPT	F-NPT/M-NPT	Sweat/F-NPT	$918.00
PZ 311 3214 3111 5	1	25	F-NPT/M-NPT	Sweat/M-NPT	F-NPT/F-NPT	$918.00
PZ 311 3215 3211 5	1	25	F-NPT/M-NPT	Sweat/M-NPT	Sweat/F-NPT	$918.00

PIPE PACKAGE SMARTCODE (ZONE)			UNION	MANUAL BALANCE VALVE	STRAINER	LIST PRICE
Pipe Package Model # (2-way Zone) with 24" hose	Valve Nominal Size Inches	DN (mm)	Body End/ Tailpiece End	Body End/ Tailpiece End	Body End/ Tailpiece End	
PZ 111 1111 1111 2	1/2	15	F-NPT/M-NPT	F-NPT/M-NPT	F-NPT/F-NPT	$545.00
PZ 111 1112 1211 2	1/2	15	F-NPT/M-NPT	F-NPT/M-NPT	Sweat/F-NPT	$545.00
PZ 111 1113 1111 2	1/2	15	F-NPT/M-NPT	F-NPT/M-NPT	F-NPT/F-NPT	$545.00
PZ 111 1211 1211 2	1/2	15	F-NPT/M-NPT	Sweat/M-NPT	Sweat/F-NPT	$545.00
PZ 111 1212 1111 2	1/2	15	F-NPT/M-NPT	Sweat/M-NPT	F-NPT/F-NPT	$545.00
PZ 111 1213 1211 2	1/2	15	F-NPT/M-NPT	Sweat/M-NPT	Sweat/F-NPT	$545.00
PZ 211 2111 2111 4	3/4	20	F-NPT/M-NPT	F-NPT/M-NPT	F-NPT/F-NPT	$671.00
PZ 211 2112 2211 4	3/4	20	F-NPT/M-NPT	F-NPT/M-NPT	Sweat/F-NPT	$671.00
PZ 211 2113 2111 4	3/4	20	F-NPT/M-NPT	F-NPT/M-NPT	F-NPT/F-NPT	$671.00
PZ 211 2211 2211 4	3/4	20	F-NPT/M-NPT	Sweat/M-NPT	Sweat/F-NPT	$671.00
PZ 211 2212 2111 4	3/4	20	F-NPT/M-NPT	Sweat/M-NPT	F-NPT/F-NPT	$671.00
PZ 211 2213 2211 4	3/4	20	F-NPT/M-NPT	Sweat/M-NPT	Sweat/F-NPT	$671.00
PZ 311 3114 3111 6	1	25	F-NPT/M-NPT	F-NPT/M-NPT	F-NPT/F-NPT	$967.00
PZ 311 3115 3211 6	1	25	F-NPT/M-NPT	F-NPT/M-NPT	Sweat/F-NPT	$967.00
PZ 311 3214 3111 6	1	25	F-NPT/M-NPT	Sweat/M-NPT	F-NPT/F-NPT	$967.00
PZ 311 3215 3211 6	1	25	F-NPT/M-NPT	Sweat/M-NPT	Sweat/F-NPT	$967.00

All combinations of reorder numbers are not reflected above. Please use the nomenclature or download the software at www.belimo.us to configure other possible combinations.

067001 - 04/13 - Subject to change. © Belimo Aircontrols (USA), Inc.

Increase efficiency through online selection.

SelectPro™

provides a fast, user-friendly and flexible means for accurately sizing and selecting control valves for hydronic and steam applications in HVAC systems. In addition, you can select an assembled pipe package for your control valve or individual pipe package components for your hydronic hot and chilled water systems. Software capabilities include:

- Calculating control valve cost and/or pipe packages for any size project
- Generating valve/actuator and/or pipe package submittal data for a project
- Printing project data, valve data, pipe pkg drawings, and pricing
- Exporting project data and selected products to Excel data format
- Saving projects in .xls or .bel file format for future editing or ordering
- Automatically uploading data through web interface for easy ordering
- Assemble a full pipe package or select “Components Only”

SelectPro™



Sizing and Selection Made Simple. Get it Here. Download it Now!

http://www.belimo.us/ishop/cms/sh/selectpro/select.html

The accurate sizing and product selection tool created by BELIMO

067001 - 04/13 - Subject to change. © Belimo Aircontrols (USA), Inc.

17 ECONOMIZER RETROFIT SOLUTIONS

- Extremely simple to navigate, the easy-to-read automotive grade LCD display delivers clear live status information, easy setup, changes, and operating history.
- ZIP Code patented technology the system will automatically recognize your climate zone and will set the high limit change over temperature providing automatic compliance.
- Plug and Play self-configuring, if it's not plugged into the economizer, you won't have to worry about setting it up.
- Integrated onboard test sequence that ensures effortless compliance with California Title 24, and verification of proper operation.
- Fault Detection and Diagnostics (FDD) troubleshoot faults, initiates alarms, and reconfigures for best operation.
- First and only economizer control that integrates onboard help for setup or troubleshooting.
- Flexible, module design capable of adding remote communication and/or energy savings strategies on the same footprint.



Applications

The ZIP Economizer saves energy in buildings by using cool outside air as a means of cooling the indoor space. The ZIP can reduce HVAC energy costs in cold and temperate climates while also improving indoor air quality.

As energy codes change towards continual efficiency, the ZIP Economizer satisfies all the requirements. ZIP Economizer, with its 'plug and play' modular design, and patented ZIP Code setup allows an easy way to ensure maximum energy savings and compliance with local energy codes.

ECONOMIZER RETROFIT SOLUTIONS

Belimo ZIP Economizer™ - An All-Inclusive Pass to Better Efficiency, Ease of Use, and Peace of Mind.

LCD Display

Automotive quality, easy-to-read display allows easy verification of set values and real time operating information

Alarm Notification

ECON-ZIP-TH

Temperature and humidity sensor for calculating enthalpy.



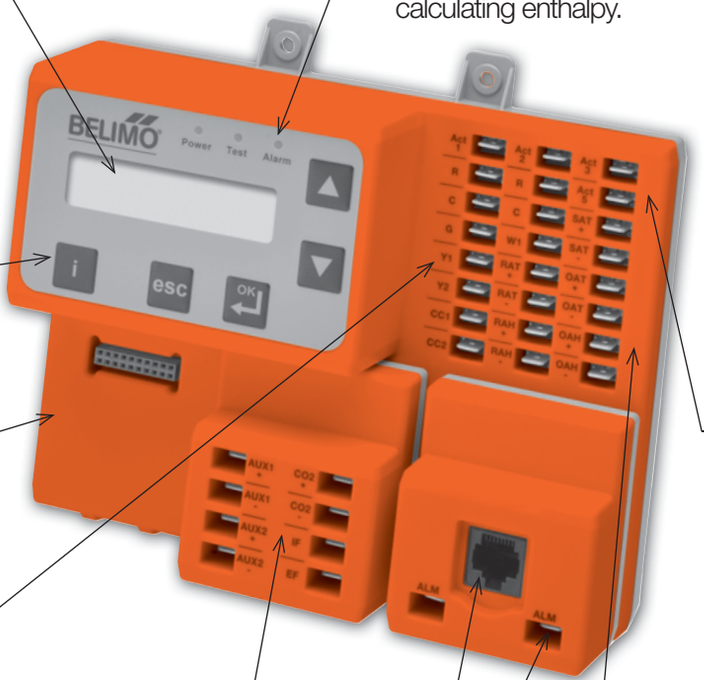

Onboard Information

Integrated help for setup and/or troubleshooting.

Future Expansion Module!



Expanded Functionality

with Belimo Actuator for continuous feedback and quicker running times in test mode.

ECON-ZIP-BASE

The plug and play modular design gives users flexibility without complex set-up or configuration. The ZIP Base allows for non proprietary sensors to be used.

ECON-ZIP-10K

Air temperature sensors.



ECON-ZIP-EM

Optional Energy Module that add I/Os to offer higher control functionalities that will save energy and will meet new and future minimum code requirements, such as 2 speed fan and Demand Control Ventilation (DCV).

Remote Alarm

ECON-ZIP-COM

Optional Communication Module that provides alarm output and firmware update with future capabilities such as data trending, building automation integration and OEM communication integration.

Learn more: www. ZIPecomonizer.com

5 YEAR WARRANTY

Specification	
Power supply	24 VAC ±20%, 50/60 Hz, class 2 power
Power consumption	(±15% accuracy)
	4 VA base control (ECON-ZIP-BASE)
	5.5 VA base control with Energy Module (ECON-ZIP-BASE + ECON-ZIP-EM)
	5 VA base control with Communication Module (ECON-ZIP-BASE + ECON-ZIP-COM)
	6.5 VA base control with Energy Module and Communication Module.
Supported temperature sensor	NTC 10K (type II thermistor) sensor auto-detection
Supported humidity sensor	0-10VDC; sensor auto-detection
Supported CO_2 sensor	0-10VDC; sensor auto-detection
Environmental	RoHS, conformally coated
Ambient temperature	-40°F to +158°F [-40°C to +70°C]
Storage temperature	-40°F to +176°F [-40°C to +80°C]
Humidity	5 to 95% R.H. (non-condensing)
Wiring	¼'' male spade connectors
Housing material	UL94-5VA
Housing	UL Type 1
Display	2x16 character LCD display
Display color	white LED backlight
Display operating temperature	-22°F to +176°F [-30°C to +80°C]
Agency listings*	EMC according to UL60730-1

*Additional listings pending approval



5 YEAR WARRANTY

Model	List Price
ECON-ZIP-BASE	$440.00

Model	Suitable Spring Return Actuators							
	Control Input	Feedback	Power Supply	Running Time(s)		VA Rating	Auxiliary Switch	List Price
				Ⓜ	♦♦			
ACTUATORS								
AFB24-SR	2-10 VDC	2-10 VDC	24 VAC/DC	95 seconds	<20 seconds	8.5	—	$588.00
NFB24-SR	2-10 VDC	2-10 VDC	24 VAC/DC	95 seconds	<20 secs	6	-	$515.00
LF24-SR US	2-10 VDC	2-10 VDC	24 VAC/DC	150 seconds	<25 seconds	5	—	$446.00
TFB24-SR	2-10 VDC	2-10 VDC	24 VAC/DC	95 seconds	<25 seconds	4	—	$384.00

Accessories	List Price
 **ECON-ZIP-TH** Temperature and humidity sensor. Allows for reliable outdoor air and humidity readings and provides enhanced functionality when used with the ZIP Economizer.	$150.00
 **ECON-ZIP-10K** Temperature sensor.	$30.00

067001- 04/13 - Subject to change. © Belimo Aircontrols (USA), Inc.

Accessories	List Price



ECON-ZIP-EM
Optional Energy module that add I/Os to offer higher control functionalities that will save energy and will meet new and future minimum code requirements, such as 2 speed fan and Demand Control Ventilation (DCV).

Technical Data

Type	Name	Description	Electrical Specification
Input	CO2 +/-	CO2 sensor input	0-10 VDC sensor auto-detection
Output	IF	indoor fan low speed enable	100'000 cycles @ inrush current of 3A, normal current 1.5A impedance for auto detection @24 V: <600 Ω @ 60Hz <800 Ω @ 50Hz
Output	EF	exhaust fan enable	100'000 cycles @ inrush current of 3A, normal current 1.5A impedance for auto detection @ 24 V: <600 Ω @ 60Hz <800 Ω @ 50Hz
Input	AUX1 ±	auxiliary input purge contact input	on/off, 24 VAC, 50/60 Hz current load min. 10mA
Input	AUX2 ±	auxiliary input remote potentiometer input	2-10 VDC

$100.00



ECON-ZIP-COM
Optional Communication module that provides alarm output and firmware update with future capabilities such as data trending, building automation integration and OEM communication integration.

Technical Data

Type	Name	Description	Electrical Specification
I/O	Comm	comunication interface	RS485 interface optical isolation max. 1k VDC (for max. 1min) Pin 4: RS485 Com Gnd Pin 7: RS485 Com A Pin 8: RS485 Com B
Relay	ALM	diagnostic alarm	relay contact 24 V normal current: 0.5A inrush current: 1A

$156.00

067001- 04/13 - Subject to change. © Belimo Aircontrols (USA), Inc.

Honeywell to Belimo Economizer Solutions

When replacing an existing actuator in an economizer unit, be sure to consider the application parameters before selecting the replacement. Use the chart below for reference. Belimo offers many direct coupled and non-direct replacement solutions. Start with your current model and controller type, and follow the diagram to the appropriate Belimo kit and actuator option.

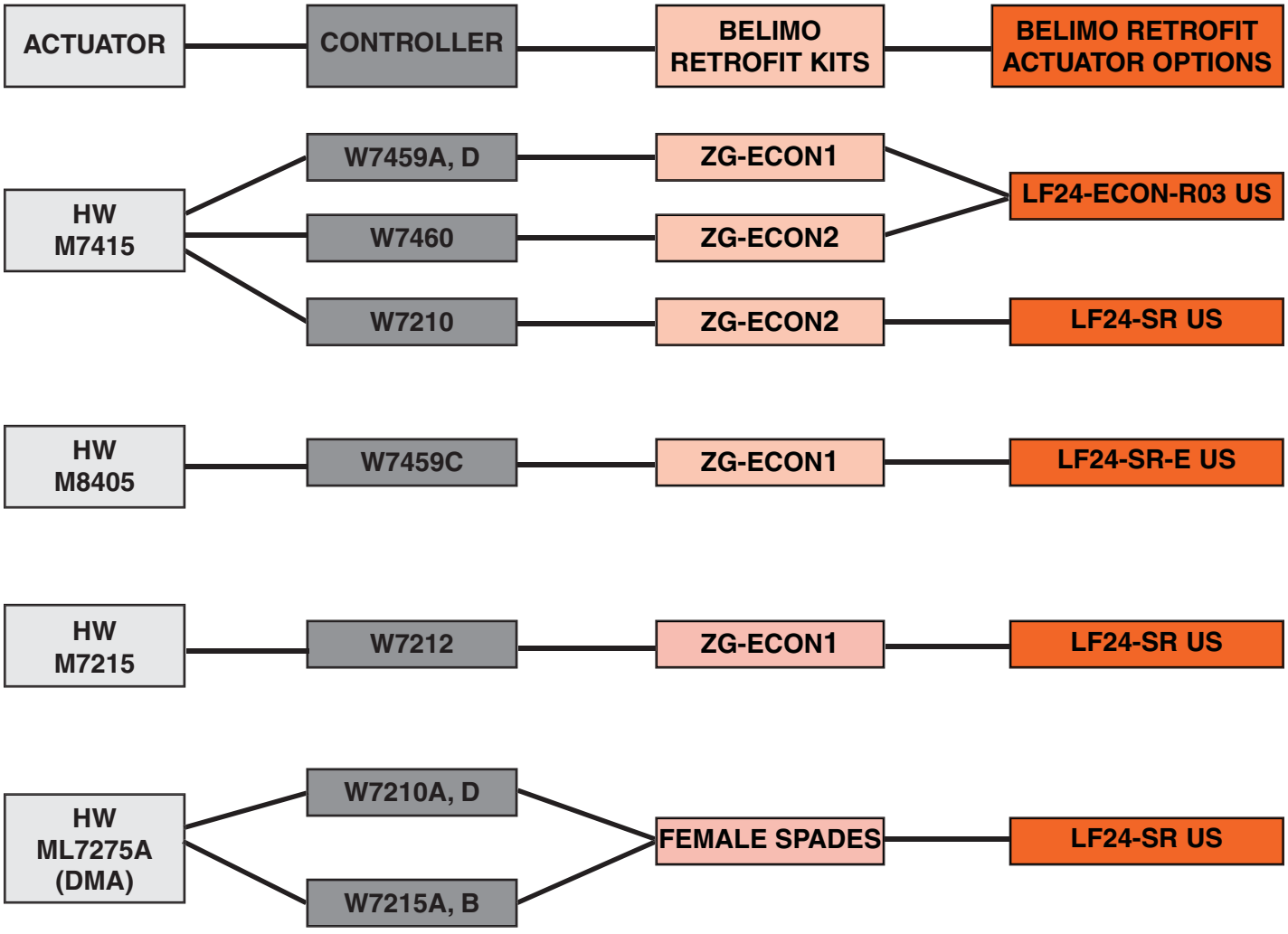

Please contact Belimo Customer Service for other solutions.

067001- 04/13 - Subject to change. © Belimo Aircontrols (USA), Inc.

Retrofit replacement solutions - Honeywell M8405 Actuator

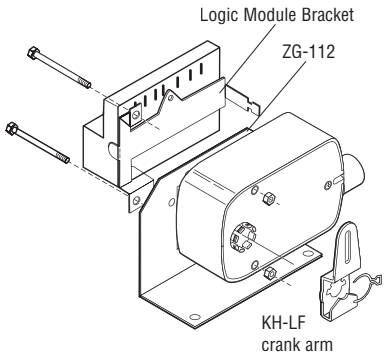

M8405 Actuator
The three-position control functionality of the LF24-SR-E US allows direct replacement of a Honeywell M8405A foot mounted economizer actuator.

	List Price
LF24-SR-E US	$480.00
ZG-LF112 Crank arm adaptor kit - includes KH-LF crank arm and clip, ZG-112 bracket and mounting hardware.	$54.00
20477-00001 Logic module bracket for Honeywell	$54.00
KG6 Ball joint (if needed)	$16.00

Retrofit replacement solutions - Honeywell M7415 Actuator

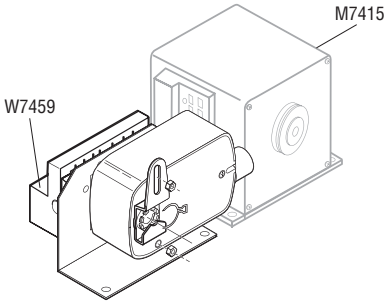

Choose either ZG-ECON1 or ZG-ECON2.

M7415 Actuator
The proportional control of mixed air set point the LF24-ECON-RO3 US allows direct replacement of a Honeywell M7415 economizer actuator.

	List Price
LF24-ECON-RO3 US	$504.00
ZG-ECON1 Includes ZG-112, KH-LF, 20477-00001 (logic module bracket), KG6 (ball joint), and 4 male spade connectors.	$90.00
ZG-ECON2 Includes ZG-112, KH-LF, KG6 (ball joint), and 4 female spade connectors.	$72.00

Retrofit replacement solutions - Honeywell M7215 Actuator

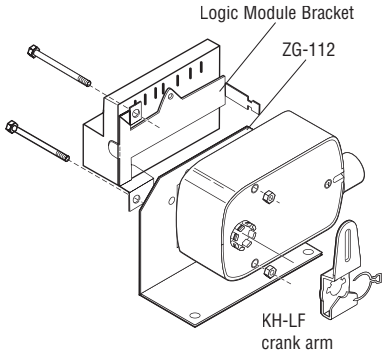

M7215 Actuator
The proportional control of mixed air set point the LF24-SR US allows direct replacement of a Honeywell M7215 economizer actuator.

	List Price
LF24-SR US	$446.00
ZG-ECON1 Includes ZG-112, KH-LF, 20477-00001 (logic module bracket), KG6 (ball joint), and 4 male spade connectors.	$90.00

067001- 04/13 - Subject to change. © Belimo Aircontrols (USA), Inc.

18 RETROFIT SOLUTIONS

- Effective retrofit solutions for valves and damper actuators.
- Quickly and easily, conveniently upfitted without any interruption in service.
- Cutting-edge technology offering quality and reliability for your entire system.
- Simple way to implement Belimo actuators in existing buildings whether electronic or pneumatic.
- Custom designs providing cost effective linkage solutions.

Applications

Valves and actuators are responsible for ensuring reliable functioning of HVAC systems all over the world. Damaged actuators or valves in a HVAC system used to create a large field issue. Replacing the valve along with the actuator is not always a sensible solution. Taking a system off-line to replace numerous valves is not only laborious, it's expensive. Facilities can lose thousands of dollars a day during maintenance shut-down. With retrofit solutions, this problem simply goes away. Valves and actuators can be quickly and conveniently upfitted without any interruption in service.







Retrofit Solutions Nomenclature

U	F	L	K	XXXX	AFB	24	-MFT
Series U = Universal S = Schneider W = Warren	**Valve Type** F = Butterfly G = Globe	**Retrofit Type** L = Linkage V = Valve SP = Special Order S = Short Stroke	**Packaging** K = Kit L = Linkage Blank with SP	Dependent upon valve you are selecting to retrofit	**Actuator Type** Non-Spring Return LV... SV... EV... RV... LM... NM... AM... GM... Spring Return LF... NF... AF... Electronic Fail-Safe LVK... SVK... AVK... GK...	**Power Supply** 24 = 24 VAC/DC 120 = 120 VAC	**Control** Blank = On/Off -3-X1 = On/Off, Floating Point -SR = 2-10 VDC -MFT = or MFT-X1 = Multi-Function Technology -MFT95-X1 = 0-135 Ω

Ordering Example

1 Select linkage solution based on the **Valve Number**, **Configuration**, and **Size**; select the proper **Linkage Solution** for your valve.

Siemens\Landis\Powers

658 Series Valves

Linkage/Actuator Selection Guide

Valve Body Model	Valve Configuration	Size	Body Type	Flow	Fail-safe	Close-Off psi	Belimo Actuator Series	Belimo Linkage
658 Series	2-way	1¼"	NPT	-	No	78	LM	**UGLK1350**
						156	NM	**UGLK1350**
						236	SV	**UGVL**
						250	AM	**UGLK1214**
					Yes	61	LF	**UGLK1350**
						156	NF	**UGLK1214**
						236	SVK	**UGVL**
						250	AF	**UGLK1214**

Example: **Siemens Series #658, 2-Way, 1¼"** valve to be retrofitted.

Choose correct kit **UGLK1214** or **UGVL**.

2 Verify close-off is suitable for application. Looking at the **UGLK or UGVL**, the **AF and SVK** Series actuator will provide **200 psi close-off** for the **1¼" valve**.

Model	Spring Return Actuators						
	Control Input	Feedback	Power Supply	Running Time(s) M	Running Time(s) ♦♦	VA Rating	Auxiliary Switch
BASIC PRODUCTS							
AFB24	On/Off	-	24 VAC/DC	<75 seconds	20 secs	7.5	-
AFB24-S	On/Off	-	24 VAC/DC	<75 seconds	20 secs	7.5	Built-In
AFBUP	On/Off	-	24-240 VAC	<75 seconds	20 secs	8.5	-
AFBUP-S	On/Off	-	24-240 VAC	<75 seconds	20 secs	8.5	Built-In
AFB24-SR	2-10 VDC (4-20mA)	2-10 VDC	24 VAC/DC	95 seconds	<20 secs	8.5	-
AFB24-SR-S	2-10 VDC (4-20mA)	2-10 VDC	24 VAC/DC	95 seconds	<20 secs	8.5	Built-In
AFB24-PC	0-10 V Phasecut	2-10 VDC	24 VAC/DC	150 seconds	<20 secs	10	-
AFB24-MFT	2-10 VDC (4-20mA)	2-10 VDC	24 VAC/DC	150 seconds	<20 secs	10	-
AFB24-MFT-S	2-10 VDC (4-20mA)	2-10 VDC	24 VAC/DC	150 seconds	<20 secs	10	Built-In
AFB24-MFT95	0 to 135	2-10 VDC	24 VAC/DC	150 seconds	<20 secs	10	-

3 Select actuator based on needed control type. Decide between **AFB24, AFB24-MFT**

or **SVKX24-3, SVKX24-MFT**.

ACTUATOR PART #		LVKX24-3	LVKB24-SR	LVKX24-MFT	SVKX24-3	SVKB24-SR	SVKX24-MFT
Control type		On/Off, Floating Point	Proportional	Proportional/MFT	On/Off, Floating Point	Proportional	Proportional/MFT
Input signal / Feedback		-	2-10 VDC	Variable	-	2-10 VDC	Variable
Running time	Motor	150 seconds	150 seconds	Variable	150 seconds	150 seconds	Variable
	Fail-Safe	35 seconds	35 seconds	35 seconds	35 seconds	35 seconds	35 seconds
Actuator travel		24mm	24mm	24mm	24mm	24mm	24mm
Actuator noise level		<45 dB(A)	<45 dB(A)	<45 dB(A)	<45 dB(A)	<45 dB(A)	<45 dB(A)
Valve Description							
GVL LINKAGES WITH ELECTRONIC FAIL-SAFE ACTUATORS							
UGVL	Universal Adjustable for 1/2" to 2"	$850.00	$895.00	$950.00	$955.00	$1,000.00	$1,050.00
SGVL	Schnieder VB7..., VB9...	$750.00	$795.00	$875.00	$825.00	$875.00	$925.00

4 Complete Ordering Example Option One:

Item 1: **UGLK1214**

Item 2: **AFB24-MFT**

4 Complete Ordering Example Option Two:

Item 1: **UGVL + SVKX24-MFT**

Why Retrofitting Makes Sense

Valves and actuators are responsible for ensuring reliable functioning hydronic and air control HVAC systems all over the world. With innovative technology, verified quality and easy handling during installations and operation, they boost the performance and efficiency of integrated building technology.

Are you in need of a solution for a broken linkage, leaky hydraulic actuator, non-functioning electric or pneumatic actuator? Do you have a need for replacing a non-functioning application within a day or so?

Belimo provides airside and waterside retrofit application solutions, with direct coupled or remote access linkages, and efficient actuators.

Damaged linkages and/or actuators resulting in non-functioning HVAC system applications, used to mean a loss of properly functioning systems leading to a degradation of energy efficiency, consumer comfort, time, and labor. Replacing a valve along with the actuator, or trying to determine how to fix an airside linkage, is not always a sensible solution. Taking a system off-line to replace various components is not only laborious, it's expensive. Facilities can lose thousands of dollars a day during maintenance shut-down. With retrofit solutions, this problem simply goes away. Valves and Damper applications can be quickly and conveniently restored without any interruption in service. In fact, entire systems can often be updated in a day. A poorly functioning or even non-functioning system can be transformed into a high functioning, more efficient system.

Belimo provides many retrofits that are compatible with all major control systems, so there is no need to replace other system controls. MFT Technology is also available and can be re-programmed to suit your controller needs with just one MFT model actuator.

In addition, Belimo's design team is ready and willing to customize a solution for non-standard retrofit solutions. As always, please call Belimo at 800-543-9038 for assistance in fulfilling your retrofit application requirements.



El Cuartel de Ballajá

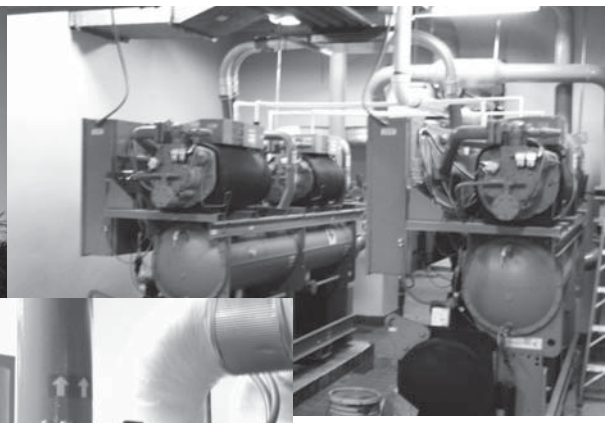

Existing Installation

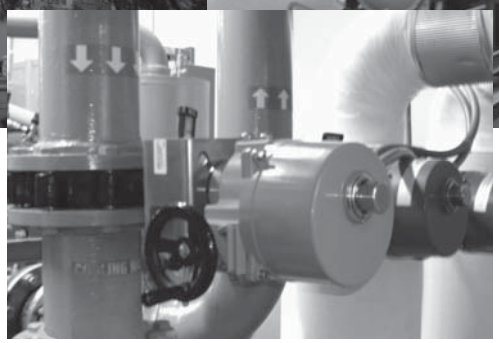

The Solution with No Down Time!

067001 - 04/13 - Subject to change. © Belimo Aircontrols (USA), Inc.

Replacement of Discontinued Belimo Products

When replacing an actuator, whether Belimo or other, be sure to consider the application parameters before selecting the replacement. The new product may not be the best fit for the application.

An example would be an existing SM24-SR US mounted to a valve linkage. The direct replacement of the actuator is the AMX24-MFT. However, the SM… and AM… are different lengths, the linkage would need to be replaced as well. When retrofitting or replacing actuators, it is always best to select the new product based on application parameters. This ensures the selected actuator is fit for the application.

SPRING RETURN ACTUATORS

DISCONTINUED	CORRECT REPLACEMENT
LF24-SR-MP US	LF24-MFT-20 US
LF24-SR-S-MP US	LF24-MFT-S-20 US
NF230 US	NFBUP
NF230-S US	NFBUP-S
SF24 US	AFB24
SF24-S US	AFB24-S
SF120 US	AFBUP
SF120-S US	AFBUP-S
FM24 US	AFB24
FM24-SR US	AFB24-SR
FM24-SR90 US	AFB24-MFT95
FM24-SR95 US	AFB24-MFT95
FS24	AFB24
FS24-S	AFB24-S
AFR24 US	AFB24
AFR24-S US	AFB24-S
AFR120 US	AFBUP
AFR120-S US	AFBUP-S
AF24-3 US	AFB24-MFT + P-300…
AFR24-3 US	AFB24-MFT + P-300…
AF24-3-S US	AFB24-MFT-S + P-300…
AFR24-3-S US	AFB24-MFT-S + P-300…
AFR24-SR US	AFB24-SR**
AF24 US	AFB24
AF24-S US	AFB24-S
AF120 US	AFBUP
AF120-S US	AFBUP-S
AF230 US	AFBUP
AF230-S US	AFBUP-S
AF24-SR-S US	AFB24-SR-S**

DISCONTINUED	CORRECT REPLACEMENT
AF24-SR95 US	AFB24-MFT95
AF24-PWM US	AFB24-MFT + P-200…
AF24-SR US	AFB24-SR**
AFA24-SR US**	AFB24-SR**
AF24-PC US	AFB24-PC
AF24-ECON-R03 US	Contact Belimo
AF24-SR US*	AFB24-PC if phasecut is needed
AF24-MFT US	AFB24-MFT
AF24-MFT-S US	AFB24-MFT-S
AF24-MFT95 US	AFB24-MFT95
NF24 US	NFB24
NF24-S US	NFB24-S
NF24-S2 US	NFB24-S
NF120 US	NFBUP
NF120-S US	NFBUP-S
NF24-SR US	NFB24-SR
NF24-SR-S US	NFB24-SR-S
NF24-MFT US	NFB24-MFT
TF24 US	TFB24
TF24-S US	TFB24-S
TF120 US	TFB120
TF120-S US	TFB120-S
TFC120-S US	TFCB120-S
TF24-SR US	TFB24-SR
TF24-SR-S US	TFB24-SR-S
TF24-3 US	TFB24-3
TF24-3-S US	TFB24-3-S
TF24-MFT US	TFB24-MFT
TF24-MFT-S US	TFB24-MFT-S

NON-SPRING RETURN ACTUATORS

DISCONTINUED	CORRECT REPLACEMENT
LM24-SR US	LMB24-SR
LM24-SR.1 US	LMB24-SR.1
LM24-SR-2.0 US	LMB24-SR
LM24-SR-T US	LMB24-SR-T
LM24-SR-T.1 US	LMB24-SR-T.1
LM24-SR-T-2.0 US	LMB24-SR-T
LMC24-SR US	LMCB24-SR
LM24-MFT US	LMX24-MFT + # LM100 1C1 ❑ ❑ ❑
LM24-MFT.1 US	LMX24-MFT+ # LM100 1C1 ❑ ❑ ❑
NM24 US	NMB24-3
NM24-1 US	NMB24-3
NM24 EU	NMB24-3
NM24-1/200 US	NMX24-3 + # NM00 1C3 000
NM24-1/300 US	NMX24-3 + # NM00 1C3 000
NM24-SR US	NMB24-SR
NM24-SRS US	NMX24-MFT + # NM100 1C1 A ❑ ❑
NM24-PWM US	NMX24-MFT + # NM100 1C1 W ❑ ❑
NM24-MFT US	NMX24-MFT + # NM100 1C1 ❑ ❑ ❑
NM24-MFT.1 US	NMX24-MFT + # NM100 1C1 ❑ ❑ ❑
NMQ24-MFT US	NMQ24-MFT
NMV24-D US	NMV-D3-MFT
NMV24-V US	NMV-D3-MFT

DISCONTINUED	CORRECT REPLACEMENT
AM24 US	AMB24-3
AM24-S US	AMB24-3-S
AM24-SR US	AMB24-SR
AM24-PWM-A US	AMX24-MFT + # AM100 1C1 W02
AM24-PWM-B US	AMX24-MFT + # AM100 1C1 W03
AM24-PWM-C US	AMX24-MFT + # AM100 1C1 W01
AM24-SRS-A US	AMX24-MFT + # AM100 1C1 A04
AM24-SRS-B US	AMX24-MFT + # AM100 1C1 A05
AM24-SRS-C US	AMX24-MFT + # AM100 1C1 A06
AM24-PC US	AMX24-PC + # AM0N0 1C1 ❑ ❑ ❑
AM24-MFT US	AMX24-MFT + # AM100 1C1 ❑ ❑ ❑
AM24-MFT 95 US	AMX24-MFT95 + # AM0L0 1C1 R01
SM24 US	AMB24-3
SM24-S US	AMX24-MFT + # AM110 1C1 ❑ ❑ ❑ + S1A/S2A
SM24-SR US	AMB24-SR
SM24-SR US	AMX24-PC if phasecut is needed
SM24-SRS US	AMX24-MFT + # AM100 1C1 A ❑ ❑
SM24-SR94 US	AMX24-MFT95 + # AM0L0 1C1 R01
GM24 US	GMB24-3
GM24-SR US	GMB24-SR
GM24-SR US	GMX24-PC if phasecut is needed
GM24-MFT US	GMX24-MFT+ # GM110 1C1 ❑ ❑ ❑

* Purchased before May 2003. ** Not piggy back capable. ❑ Placeholder for custom options.

067001 - 04/13 - Subject to change. © Belimo Aircontrols (USA), Inc.

Replacement of Discontinued Belimo Products

When replacing an actuator on a valve, whether Belimo or other, be sure to consider the application parameters before selecting the replacement. The new product may not be the best fit for the application.

An example would be an existing MAR actuator mounted to a valve linkage. The direct replacement of the actuator would be the SY series actuator. However, the MAR and the SY have different linkage construction, and the linkage would need to be replaced as well. When retrofitting or replacing actuators, it is always best to select the new product based on application parameters. This ensures the selected actuator is fit for the application.

Please consult Belimo for assistance with valve actuator replacement.

SPRING RETURN ACTUATORS

DISCONTINUED MODEL #	REPLACEMENT
LF24-SR-MP US	LF24-MFT-20 US
LF24-SR-S-MP US	LF24-MFT-S-20 US
AF24-3 US	AFX24-MFT + P-300..
AF24-3-S US	AFX24-MFT-S + P-300..
AF24-SR-S US	AFX24-MFT-S + P-100..
AF24-SR95 US	AFB24-MFT95
AF24-PWM US	AFX24-MFT + P-200..
NVF24-MFT US	SVKX24-MFT* or SVKX24-SR*
NVF24-MFT-E US	SVKX24-MFT* or SVKX24-SR*

*New linkage required.

NON-SPRING RETURN ACTUATORS

DISCONTINUED MODEL #	REPLACEMENT
LV24 US	CCV with LR... or TR....
LV24/200 US	CCV with LR... or TR....
LV24/300 US	CCV with LR... or TR....
LV24-3 US	CCV with LR... or TR....
LV24-1 US	CCV with LR... or TR....
LV24-1/200 US	CCV with LR... or TR....
LV24-1/300 US	CCV with LR... or TR....
LV24-3-1 US	CCV with LR... or TR....
LV24-SR US	CCV with LR... or TR....
LV24-SR/200 US	CCV with LR... or TR....
LV24-SR/300 US	CCV with LR... or TR....
LV24-SR-1 US	CCV with LR... or TR....
LV24-SR-1/200 US	CCV with LR... or TR....
LV24-SR-1/300 US	CCV with LR... or TR....
LV24-SR-1-2.0 US	CCV with LR... or TR....
LV24-SR-1-2.0/200 US	CCV with LR... or TR....
LV24-SR-1-2.0/300 US	CCV with LR... or TR....
LR24 US	LRB24-3
LR24-MFT US	LRX24-MFT + # LR100 RC1 ❑ ❑ ❑
LR24/200 US	LRX24-3 + # LR000 RC3 002
LR24/300 US	LRX24-3 + # LR000 RC3 002
LR24-1 US	LRB24-3
LR24-1/200 US	LRX24-3 + # LR000 RC3 002
LR24-1/300 US	LRB24-3 + # LR000 RC3 002
LR24-3-1 US	LRB24-3
LR24-3-1/200 US	LRX24-3 + # LR000 RC3 002
LR24-3-1/300 US	LRX24-3 + # LR000 RC3 002
LR24-SR/200 US	LRX24-SR + # LR030 RC3 002
LR24-SR/300 US	LRX24-SR + # LR030 RC3 002
LR24-SR-1 US	LRB24-SR
LR24-SR-1/200 US	LRX24-SR + # LR030 RC3 002
LR24-SR-1/300 US	LRX24-SR + # LR030 RC3 002
LR24-SR-1-2.0 US	LRB24-SR
LR24-SR-1-2.0/200 US	LRX24-SR + # LR030 RC3 002
LR24-SR-1-2.0/300 US	LRX24-SR + # LR030 RC3 002
LR24-SR-2.0 US	LRB24-SR
LR24-SR-2.0/200 US	LRX24-SR + # LR030 RC3 002
LR24-SR-2.0/300 US	LRX24-SR + # LR030 RC3 002
LR24-MFT/200 US	LRX24-MFT + # LR100 RC3 ❑ ❑ ❑
LR24-MFT/300 US	LRX24-MFT + # LR100 RC3 ❑ ❑ ❑

❑ Placeholder for custom options.

NON-SPRING RETURN ACTUATORS

DISCONTINUED MODEL #	REPLACEMENT
NV24-3 US	SVX24-3*
NV24-MFT US	SVX24-MFT* or SVX24-SR*
NVG24-MFT US	EVX24-MFT* or EVX24-3*
NR24-3 US**	LRB24-3
NR24-SR US**	LRX24-MFT + # LR100 RC1 ❑ ❑ ❑
NM24 US	ARB24-3
NM24-SR US	ARX24-SR + # AR030 RC1 ❑ ❑ ❑
NM24-MFT US	ARX24-MFT + # AR100 RC1A ❑ ❑
NM24-SRS US	ARX24-MFT + # AR100 RC1W ❑ ❑
AM24 US	ARB24-3
AM24-S US	ARB24-S US
AM24-MFT US	ARX24-MFT + # AR100 RC1 ❑ ❑ ❑

* New linkage required.
❑ Placeholder for custom options.
** Consider ambient temperature for application.

NON-SPRING RETURN – 24 VAC

DISCONTINUED MODEL	Torque	REPLACEMENT	Torque
MAR100B-24V	1,500	SY4-24*	3,560
MAR160-B-24V	2,000	SY4-24*	3,560
MAR100BP-24V	1,800	SY4-24MFT*	3,560
MAR160-BP-24V	2,500	SY4-24MFT*	3,560
MAR250-60-24V	5,000	SY5-24*	4,450
MAR250-60P-24V	5,000	SY5-24MFT*	4,450

*New linkage required.

NON-SPRING RETURN – 110 VAC

DISCONTINUED MODEL	Torque	REPLACEMENT	Torque
MAR95-15B	1,000	SY3-110*	1,335
MAR95-15BP	1,000	SY3-120MFT*	1,335
MAR100B	1,500	SY4-110*	3,559
MAR160B	2,000	SY4-110*	3,560
MAR100BP	1,800	SY4-120MFT*	3,560
MAR160-BP	2,500	SY4-120MFT*	3,560
MAR250-30	5,000	SY5-110*	4,450
MAR250-30P	5,000	SY5-120MFT*	4,450
		SY6-110*	6,450
		SY6-120MFT*	6,450
MAR800-30	10,000	SY7-110*	9,790
MAR800-30P	10,000	SY7-120MFT*	9,790
		SY8-110 *	13,350
		SY8-120MFT*	13,350
MAR1600-70	21,000	SY10-110*	22,250
MAR1600-70P	21,000	SY10-120MFT*	22,250
MAR4000-70	48,000	SY12-110*	31,150
MAR4000-70P	48,000	SY12-120MFT*	31,150

*New linkage required.

SPRING RETURN – 110 VAC / NON-SPRING RETURN – 110 VAC

DISCONTINUED MODEL	Torque	REPLACEMENT	Torque & Battery System
Sure49-30-CW	600	SY2-110*	800 + NSV-SY-01
Sure100-30-CW	1,200	SY3-110*	1,335 + NSV-SY-01
Sure49-30P-CW	600	SY2-120MFT*	800 + NSV-SY-02
Sure100-30P-CW	1,200	SY3-120MFT*	1,335 + NSV-SY-02

*New linkage required.

067001 - 04/13 - Subject to change. © Belimo Aircontrols (USA), Inc.

Actuator Cross Reference and Replacement Options in Minutes!

SelectPro™

provides a fast, user-friendly and flexible means for accurately finding competitor to Belimo actuator replacements, fire and smoke actuator materials and all other retrofit needs. Software includes a full line of competitor cross reference, including:

- Honeywell
- Invensys
- Johnson Controls
- Siemens
- Ruskin
- Siebe
- Multi Products

Sizing and Selection Made Simple. Get it Here. Download it Now!

http://www.belimo.us/ishop/cms/sh/selectpro/select.html

More reference materials available at:
http://www.belimo.us/ishop/cms/sh/belimolibrary/retrofit/retrofit.html

BELIMO

067001 - 04/13 - Subject to change. © Belimo Aircontrols (USA), Inc.

UGSL1200 Short-Stroke Valve Retrofit Kit

For CM and TF Series Actuators



List Price: $118.00

5 YEAR WARRANTY

Technical Data	UGSL1200
Housing	aluminum
Materials:	
Coupling nut	brass
Shafts	stainless steel
Base plate	aluminum
Upper plate	stainless steel
Cams	nylon 6/6 with MDS
Stroke	6 mm in CW direction
Max out force	67 lbf [300 N]
Mounting position	360° mountable as shown
Ambient temperature	-22°F to 122°F [-30°C to 50°C]
Storage temperature	-40°F to 176°F [-40°C to 80°C]
Servicing	chilled or hot water max steam inlet 15 psi
Weight	1.25 lbs [0.57 kg]

Mounting Configurations

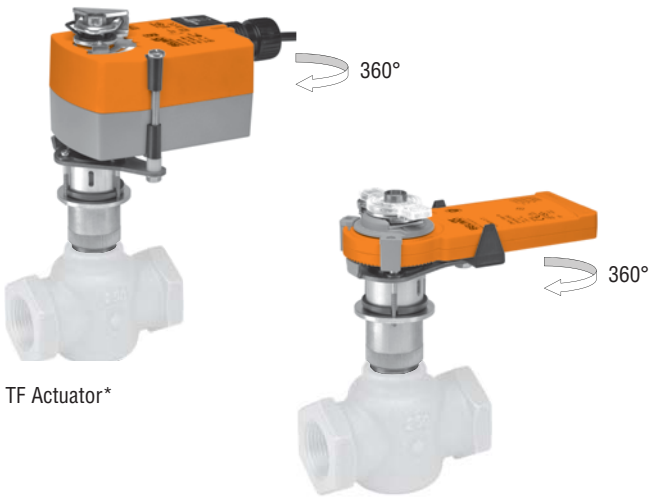

TF Actuator*

CM Actuator

Application

The UGSL1200 retrofit kit is designed to easily attach to the valve bonnet on select Siemens 599 MT/MZ short-stroke valves utilizing Belimo CM and TF* series actuators.

The unique coupler design allows the UGSL1200 to be mounted on any ½" to 1¼" two-way or three-way valves. In addition, the linkage is suitable for both normally open and normally closed valves.

Default/Configuration

The default set up for this linkage is for usage with the CM actuator. Included in the kit is an extension piece for TF actuators. Hardware is supplied to attach the shaft extension and anti-rotation screws to both a CM or TF actuator.

Operation

The UGSL1200 linkage provides 6 mm of downward stroke with 95° CW rotation on the actuator. This allows the valve to extend fully open or closed based on signal. The slot located on the housing provides indication when the maximum stroke has been reached. For troubleshooting when using a CM actuator, the operator may use the manual override feature to rotate the linkage up or down. When using the TF, refer to electronic override instructions according to actuator model.

Note: Linkage cannot be used on 1 ½" normally closed valves.

***TFL series actuators required for on/off applications**

TF Dimensions (Inches [mm])

D315

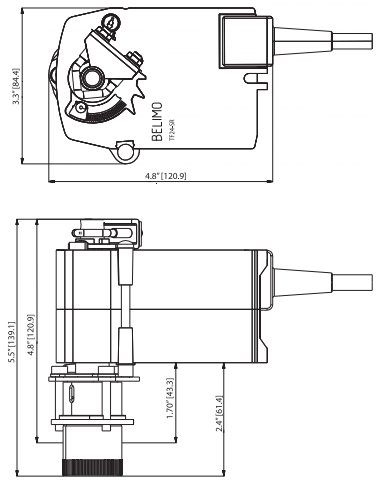

CM Dimensions (Inches [mm])

D316

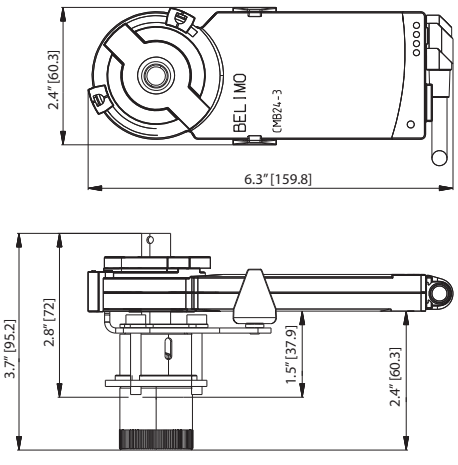

RETROFIT SOLUTIONS

067001 - 04/13 - Subject to change. © Belimo Aircontrols (USA), Inc.

MAXIMUM DIMENSIONS – UGLK Linkages with Rotary Actuators

Linkages Taking 1 Actuator

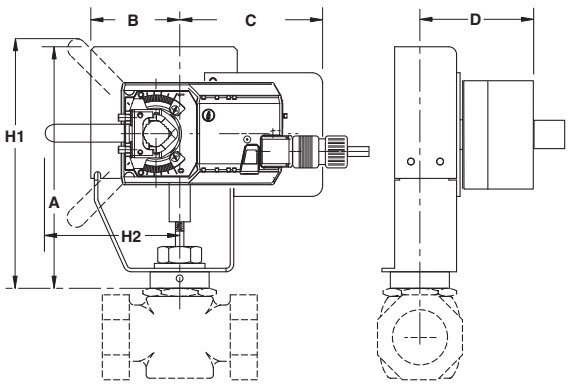

Linkages Taking 2 Actuators

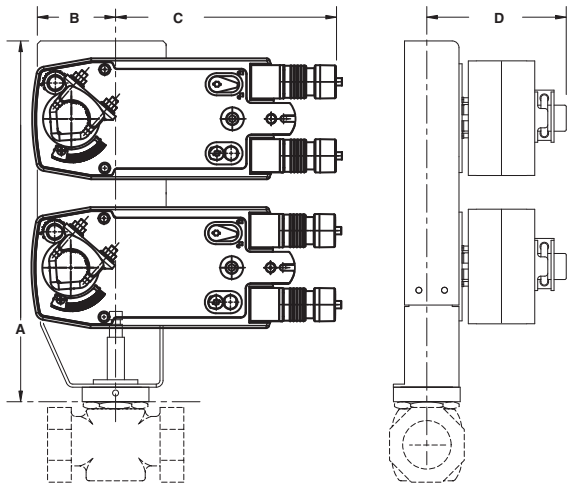

UGLK1150 and UGLK1550

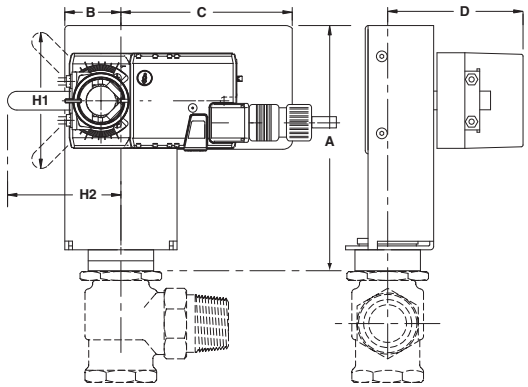

MAXIMUM DIMENSIONS

If the required spring return direction is not known, a UGLK linkage and spring return actuator may be selected. The rotary actuators can be turned over on the linkage and produce a spring return function in either direction.

Linkages Taking 1 Actuator			
A	7"-14" [356]	D	5" [127]
B	3" [76]	H1	9.5" [241]
C	9" [229]	H2	9.5"

Linkages Taking 2 Actuators			
A	19" [483]	D	5" [127]
B	3" [76]		
C	9" [229]		

UGLK1150 and UGLK1550			
A	6.5" [165]	D	4.0" [102]
B	1.5" [33]	H1	4.0" [102]
C	5.0" [127]	H2	3.5" [89]

067001 - 04/13 - Subject to change. © Belimo Aircontrols (USA), Inc.

MAXIMUM DIMENSIONS – GVL Linkages with New Generation Linear Series Actuators

Self Adapting Stroke

The "V" Series actuators, which are used with the UGVL, SGVL, and WGVL retrofit kits, are stroke adapting actuators. In modulating applications, the actuator will recognize the stroke length requirement and automatically adjust the control signal for maximum resolution.

UGVL with LV, SV Dimensions (Inches [mm])

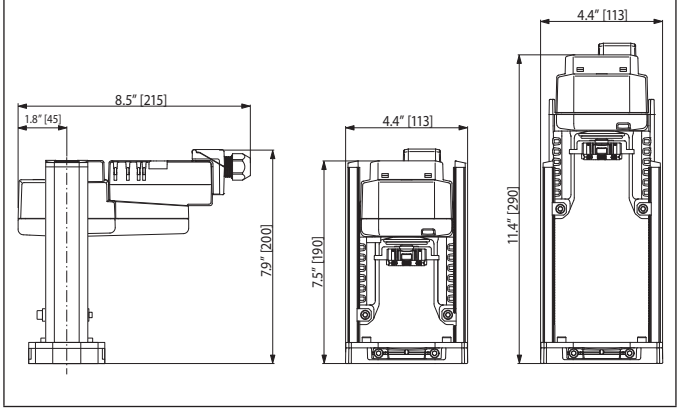

UGVL with LVK, SVK Dimensions (Inches [mm])

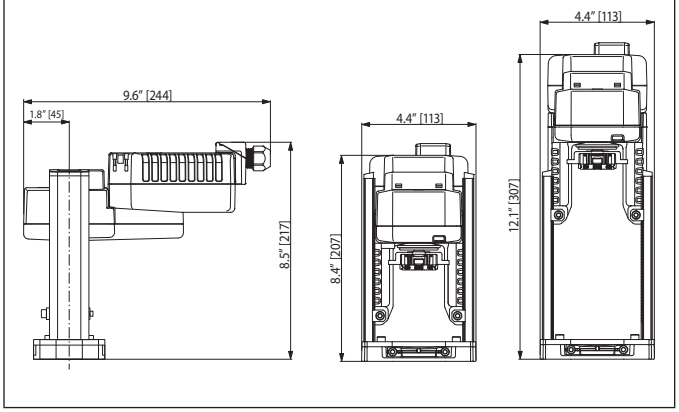

SGVL with LV, SV Dimensions (Inches [mm])

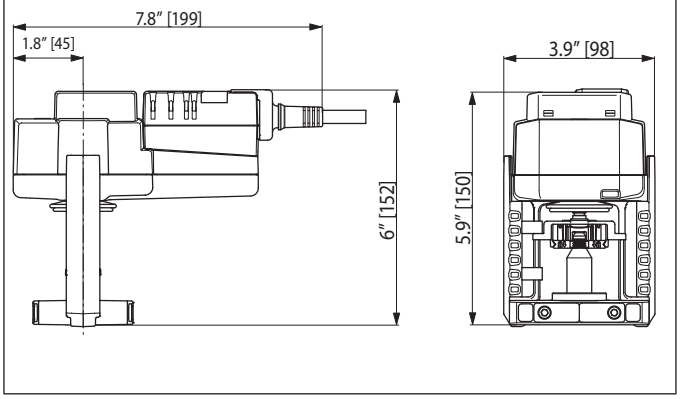

SGVL with LVK, SVK Dimensions (Inches [mm])

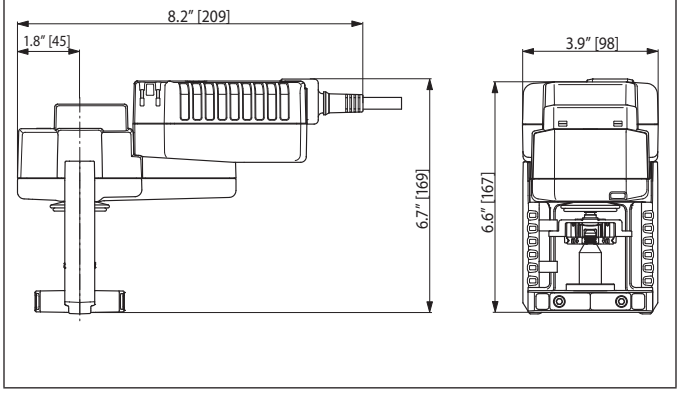

WGVL with EV, RV Dimensions (Inches [mm])

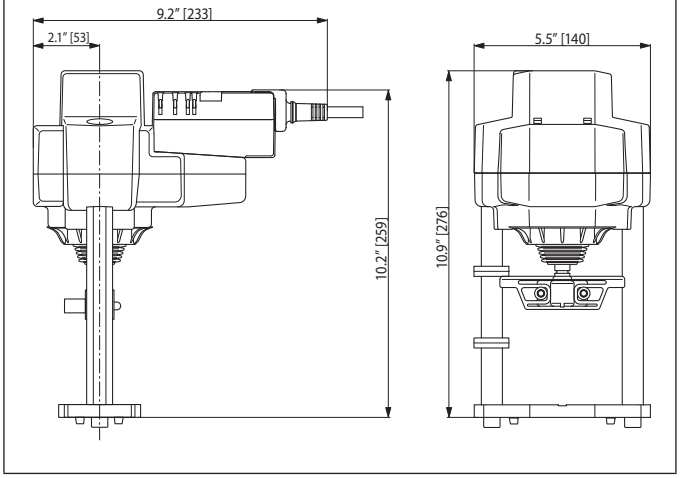

WGVL with AVK Dimensions (Inches [mm])

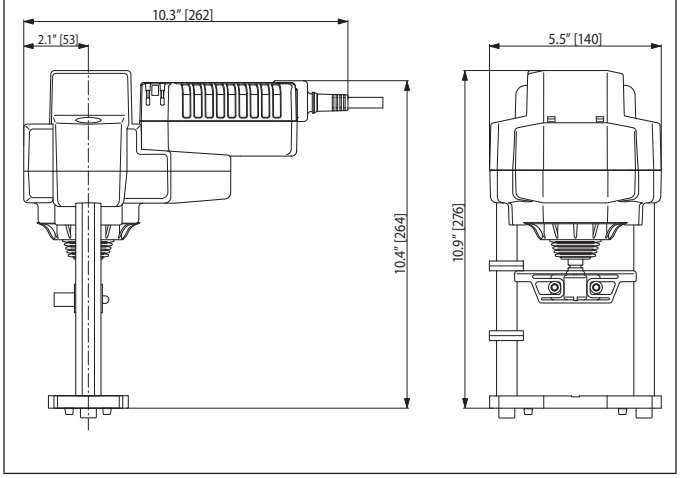

RETROFIT SOLUTIONS

067001 - 04/13 - Subject to change. © Belimo Aircontrols (USA), Inc.

BELIMO

How to Select a Globe Valve Retrofit Solution

Follow the four steps listed below when ordering a globe valve retrofit kit for either UGLK or GVL series linkages.

Example: Siemens 658 series, **1¼"** valve, needing **200 psi** close-off pressure and **Fail-Safe** actuation.

1. Based on the **Valve Number, Configuration** and **Size**, select the proper linkage or linkages for your valve.

   Some valves will have more than one linkage offered, use the actuator or combination pages to determine the appropriate linkage for a given application. In this example there is a **UGLK1214, UGLK1350** and a **UGVL** series linkage available.

2. Use the selection guide and your close-off pressure requirement to select the correct actuator series for your application. Looking at the **UGLK1350** there are no fail-safe actuators that will achieve 200 psi close-off for 1¼" valve. Looking at the **UGLK1214** or **UGVL,** the **AF** or **SVK** Series actuator will provide over **200 psi close-off** for the **1¼" valve**.

3. Use the actuator listings to make your final actuator selection.

4. HOW TO ORDER:

Option One:
Item 1 1pc UGLK1214
Item 2 1pc AFB24-MFT

Option Two:
Item 1 1pc UGVL + SVKX24-MFT

5 YEAR WARRANTY

RETROFIT SOLUTIONS

1. Select linkage solution based on the **Valve Number**, **Configuration**, and **Size**; select the proper **Linkage Solution** for your valve.

Example: **Siemens Series #658, 2-Way, 1¼"** valve to be retrofitted.

Choose correct kit **UGLK1214** or **UGVL**.

Siemens\Landis\Powers

658 Series Valves
Linkage/Actuator Selection Guide

Valve Body Model	Valve Configuration	Size	Body Type	Flow	Fail-safe	Close-Off psi	Belimo Actuator Series	Belimo Linkage
658 Series	2-way	1¼"	NPT	-	No	78	LM	**UGLK1350**
						156	NM	**UGLK1350**
						236	SV	**UGVL**
						250	AM	**UGLK1214**
					Yes	61	LF	**UGLK1350**
						156	NF	**UGLK1214**
						236	SVK	**UGVL**
						250	AF	**UGLK1214**

2. Verify close-off is suitable for application. Looking at the **UGLK or UGVL**, the **AF and SVK** Series actuator will provide **200 psi close-off** for the **1¼" valve**.

3. Select actuator based on needed control type. Decide between **AFB24, AFB24-MFT**

or **SVKX24-3, SVKX24-MFT**.

Model	Control Input	Feedback	Power Supply	Running Time(s) M	Running Time(s) ♦♦	VA Rating	Auxiliary Switch
Spring Return Actuators							
BASIC PRODUCTS							
AFB24	On/Off	-	24 VAC/DC	<75 seconds	20 secs	7.5	-
AFB24-S	On/Off	-	24 VAC/DC	<75 seconds	20 secs	7.5	Built-In
AFBUP	On/Off	-	24-240 VAC	<75 seconds	20 secs	8.5	-
AFBUP-S	On/Off	-	24-240 VAC	<75 seconds	20 secs	8.5	Built-In
AFB24-SR	2-10 VDC (4-20mA)	2-10 VDC	24 VAC/DC	95 seconds	<20 secs	8.5	-
AFB24-SR-S	2-10 VDC (4-20mA)	2-10 VDC	24 VAC/DC	95 seconds	<20 secs	8.5	Built-In
AFB24-PC	0-10 V Phasecut	2-10 VDC	24 VAC/DC	150 seconds	<20 secs	10	-
AFB24-MFT	2-10 VDC (4-20mA)	2-10 VDC	24 VAC/DC	150 seconds	<20 secs	10	-
AFB24-MFT-S	2-10 VDC (4-20mA)	2-10 VDC	24 VAC/DC	150 seconds	<20 secs	10	Built-In
AFB24-MFT95	0 to 135	2-10 VDC	24 VAC/DC	150 seconds	<20 secs	10	-

4. Complete Ordering Example Option One:
   Item 1: **UGLK1214**
   Item 2: **AFB24-MFT**

4. Complete Ordering Example Option Two:
   Item 1: **UGVL + SVKX24-MFT**

ACTUATOR PART #		LVKX24-3	LVKB24-SR	LVKX24-MFT	SVKX24-3	SVKB24-SR	SVKX24-MFT
Control type		On/Off, Floating Point	Proportional	Proportional/MFT	On/Off, Floating Point	Proportional	Proportional/ MFT
Input signal / Feedback		-	2-10 VDC	Variable	-	2-10 VDC	Variable
Running time	Motor	150 seconds	150 seconds	Variable	150 seconds	150 seconds	Variable
	Fail-Safe	35 seconds	35 seconds	35 seconds	35 seconds	35 seconds	35 seconds
Actuator travel		24mm	24mm	24mm	24mm	24mm	24mm
Actuator noise level		<45 dB(A)	<45 dB(A)	<45 dB(A)	<45 dB(A)	<45 dB(A)	<45 dB(A)
Valve Description							
GVL LINKAGES WITH ELECTRONIC FAIL-SAFE ACTUATORS							
UGVL	Universal Adjustable for 1/2" to 2"	$850.00	$895.00	$950.00	$955.00	$1,000.00	$1,050.00
SGVL	Schnieder VB7..., VB9...	$750.00	$795.00	$875.00	$825.00	$875.00	$925.00

067001 - 04/13 - Subject to change. © Belimo Aircontrols (USA), Inc.

ROTARY ACTUATORS SUGGESTION

SERIES	MODEL	Spring Return	Electronic Fail-Safe	Tandem Mounting Available	Control Input	Feedback Position	Power Supply	Standard Running Time	List Price
LF Series*	LF24 US	•			On/Off	-	24 VAC/DC	Consult Specifications	$325.00
	LF24-MFT US	•			Variable with MFT (VDC, PWM, Floating Point, On/Off)	variable VDC	24 VAC/DC		$504.00
NF Series*	NFBUP-X1	•			On/Off	-	24-240 VAC		$437.00
	NFX24-MFT	•			(24 VAC/DC) Variable with MFT (VDC, PWM, Floating Point, On/Off)	variable VDC	24 VAC/DC		$574.00
AF Series*	AFBUP-X1	•		•	On/Off	-	24-240 VAC		$571.00
	AFX24-MFT-X1	•		•	Variable with MFT (VDC, PWM, Floating Pt., On/Off)	variable VDC	24 VAC/DC		$648.00
LM Series*	LMB24-3-X1				Floating Point, On/Off	-	24 VAC/DC		$172.00
	LMX24-MFT-X1				Variable with MFT (VDC, PWM, Floating Point, On/Off)	variable VDC	24 VAC/DC		$353.00
NM Series*	NMB24-3-X1				Floating Point, On/Off	-	24 VAC/DC		$233.00
	NMX24-MFT-X1				Variable with MFT (VDC, PWM, Floating Point, On/Off)	variable VDC	24 VAC/DC		$410.00
AM Series*	AMB24-3-X1				Floating Point, On/Off	-	24 VAC/DC		$327.00
	AMX24-MFT-X1				Variable with MFT (VDC, PWM, Floating Point, On/Off)	variable VDC	24 VAC/DC		$510.00
GM Series*	GMB24-3-X1			•	Floating Point, On/Off	-	24 VAC/DC		$504.00
	GMX24-MFT-X1			•	Variable with MFT (VDC, PWM, Floating Point, On/Off)	variable VDC	24 VAC/DC		$719.00
GK Series*	GKB24-3-X1		•		Floating Point, On/Off	-	24 VAC/DC		$1,084.00
	GKX24-MFT-X1		•	•	Variable with MFT (VDC, PWM, Floating Point, On/Off)	variable VDC	24 VAC/DC		$1,509.00

***Please consult the Damper sections for a full list of product offerings. Standard run times should be considered in the selection. All air side products are applicable for retrofit kits. Select "X1" actuators come with a handle.**

MULTI-FUNCTION TECHNOLOGY

	PROGRAMMING CODE		Control Input	Running Time	Built-in Feedback	List Price
ROTARY ACTUATOR	P-10001	A01	2-10 VDC	150 seconds	2-10 VDC	No Charge
	P-10002	A02	0.5-10 VDC	150 seconds	0.5-10 VDC	No Charge
	P-10028	A28	0.5-10 VDC	150 seconds	0.5-10 VDC	No Charge
	P-10063	A63	0.5-4.5 VDC	150 seconds	0.5-4.5 VDC	No Charge
	P-10064	A64	5.5-10 VDC	150 seconds	5.5-10 VDC	No Charge
	P-20002	W02	0.02-5.00 seconds PWM	150 seconds	2-10 VDC	No Charge
	P-20003	W03	0.10-25.5 seconds PWM	150 seconds	2-10 VDC	No Charge
	P-30001	F01	Floating Point	150 seconds	2-10 VDC	No Charge
	P-40002	J02	On/Off	150 seconds	2-10 VDC	No Charge

MULTI-FUNCTION TECHNOLOGY

	PROGRAMMING CODE	Control Input	Running Time	Built-in Feedback	List Price
LINEAR ACTUATOR	G43	2-10 VDC	90 seconds	2-10 VDC	No Charge
	G53	0.5-10 VDC	90 seconds	0.5-10 VDC	No Charge
	W3M	0.02-5.00 seconds PWM	90 seconds	2-10 VDC	No Charge
	G13	Floating Point	90 seconds	2-10 VDC	No Charge
	G03	On/Off	90 seconds	2-10 VDC	No Charge

067001 - 04/13 - Subject to change. © Belimo Aircontrols (USA), Inc.

UGVL, SGVL, WGVL Series Linkages, Non-Spring Return Actuators

Retrofit Linkages for NPT and Flanged Globe Valves

BELIMO

Actuator/Linkage Specifications

Force	
LV	112 lbf [500N]
SV	337 lbf [1500N]
EV	562 lbf [2500N]
RV	1011 lbf [4500N]
Linkage material	aluminum and steel
Fits valve bonnet diameter	up to 1.7" [43.18mm]
Position indication	adjustable inserts on linkage
Manual override	4mm hex (wrench supplied) external push button
Direction of rotation♦	external switch
Dimensions	
UGVL	7.5" to 11.4" x 7.8" x 4.5"
SGVL	6" x 7.8" x 3.8"
WGVL	10" x 9.2" x 5.5"
Electrical Connection	3 ft., 18 GA plenum rated cable, 1/2" conduit fitting
120V	appliance cable
Overload Protection	electronic throughout stroke
Auxiliary Switch(es)	add on: 2 SPDT, 3A @ 250V
Housing	NEMA 2/IP54, UL Enclosure Type 2
Agency Listings	cULus according to UL 60730-1A/-2-14, CAN/CSA E60730-1:02, CE according to 2004/108/EC and 2006/95/EC

MFT

MFT= 2-10 VDC Default, or Set, Modify, Read:

- **Control (VDC range, Floating Point)**
- **Feedback (2-10 VDC, Variable)**
- **Motion (run time)**

All actuators have BDCM

LISTED 94 D5 TEMP. IND. & REG. EQUIP.

5 YEAR WARRANTY

Non-Spring Return Actuators



UGVL



SGVL

ACTUATOR PART #	LVX24-3	LVX120-3	LVB24-SR	LVX24-MFT	SVX24-3	SVX120-3	SVB24-SR	SVX24-MFT
Control type	On/Off, Floating Point	On/Off, Floating Point	Proportional	Proportional/ MFT	On/Off, Floating Point	On/Off, Floating Point	Proportional	Proportional/ MFT
Input signal / Feedback	-	-	2-10 VDC*	Variable	-	-	2-10 VDC*	Variable
Running time	90 seconds	90 seconds	90 seconds	Variable	90 seconds	90 seconds	90 seconds	Variable
Actuator travel	15mm***	15mm	15mm	15mm	20mm	20mm	20mm	20mm
Actuator noise level	55 dB(A)	55 dB(A)	55 dB(A)	55 dB(A)	45 dB(A)	45 dB(A)	45 dB(A)	45 dB(A)
Valve Description								
GVL LINKAGES WITH NON-SPRING RETURN ACTUATORS								
UGVL Universal Adjustable for 1/2" to 2"	$600.00	$625.00	$650.00	$700.00**	$700.00	$725.00	$750.00	$800.00**
SGVL Schneider VB7..., VB9...	$555.00	$575.00	$600.00	$650.00**	$625.00	$695.00	$675.00	$725.00**

♦ Variable with MFT.
* 4-20 mA with 500 Ω resistor ZG-R01
**Prices do not reflect additional programming codes surcharge. See page 18-9 for linear actuator MFT codes.
*** Longer stroke available. Verify valve travel requirements. Contact Belimo Technical Support for details.

Non-Spring Return Actuators



WGVL



WGVL

ACTUATOR PART #	EVB24-3	EVB120-3	EVB24-MFT	RVB24-3	RVB24-MFT
Control type	On/Off, Floating Point	On/Off, Floating Point	Proportional/MFT	On/Off, Floating Point	Proportional/MFT
Input signal / Feedback	-	-	Variable	-	Variable
Running time	90 seconds	90 seconds	Variable	90 seconds	Variable
Actuator travel	50mm	50mm	50mm	50mm	50mm
Actuator noise level	65 dB(A)	65 dB(A)	65 dB(A)	65 dB(A)	65 dB(A)
Valve Description					
GVL LINKAGES WITH NON-SPRING RETURN ACTUATORS					
WGVL Warren Controls Type 20, 22, 30, 32	$850.00	$1,125.00	$950.00**	$950.00	$1,050.00**

**Prices do not reflect additional programming codes surcharge. See page 18-9 for linear actuator MFT codes.

067001 - 04/13 - Subject to change. © Belimo Aircontrols (USA), Inc.

Actuator/Linkage Specifications

Force	
LVK	112 lbf [500N]
SVK	337 lbf [1500N]
AVK	450 lbf [2000N]
Linkage material	aluminum and steel
Fits valve bonnet diameter	up to 1.7" [43.18mm]
Position indication	adjustable inserts on linkage
Manual override	4mm hex (wrench supplied) external push button
Fail postion	field selectable
Direction of rotation♦	external switch
Dimensions	
UGVL	8" to 12" x 9.5" x 4.5"
SGVL	6.5" x 9.5" x 4.5"
WGVL	10" x 9.2" x 5.5"
Electrical Connection	3 ft., 18 GA plenum rated cable, 1/2" conduit fitting
120V	appliance cable
Overload Protection	electronic throughout stroke
Auxiliary Switch(es)	add on: 2 SPDT, 3A @ 250V
Housing	NEMA 2/IP54, UL Enclosure Type 2
Agency Listings	cULus according to UL 60730-1A/-2-14, CAN/CSA E60730-1:02, CE according to 2004/108/EC and 2006/95/EC

MFT

MFT= 2-10 VDC Default, or Set, Modify, Read:

- **Control (VDC range, Floating Point)**
- **Feedback (2-10 VDC, Variable)**
- **Motion (run time)**

All actuators have BDCM

5 YEAR WARRANTY

RETROFIT SOLUTIONS

Electronic Fail-Safe Actuators



UGVL



SGVL

ACTUATOR PART #		LVKX24-3	LVKX120-3	LVKB24-SR	LVKX24-MFT	SVKX24-3	SVKX120-3	SVKB24-SR	SVKX24-MFT
Control type		On/Off, Floating Point	On/Off, Floating Point	Proportional	Proportional/ MFT	On/Off, Floating Point	On/Off, Floating Point	Proportional	Proportional/ MFT
Input signal / Feedback		-	-	2-10 VDC*	Variable	-	-	2-10 VDC*	Variable
Running time	Motor	90 seconds	90 seconds	90 seconds	Variable	90 seconds	90 seconds	90 seconds	Variable
	Fail-Safe	35 seconds	35 seconds	35 seconds	35 seconds	35 seconds	35 seconds	35 seconds	35 seconds
Actuator travel		15mm***	15mm	15mm	15mm	20mm	20mm	20mm	20mm
Actuator noise level		55 dB(A)	55 dB(A)	55 dB(A)	55 dB(A)	45 dB(A)	45 dB(A)	45 dB(A)	45 dB(A)
Valve Description									
GVL LINKAGES WITH ELECTRONIC FAIL-SAFE ACTUATORS									
UGVL	Universal Adjustable for 1/2" to 2"	$850.00	$875.00	$895.00	$950.00**	$955.00	$980.00	$1,000.00	$1,050.00**
SGVL	Schneider VB7..., VB9...	$750.00	$775.00	$795.00	$875.00**	$825.00	$850.00	$875.00	$925.00**

♦ Variable with MFT.
* 4-20 mA with 500 Ω resistor ZG-R01
**Prices do not reflect additional programming codes surcharge. See page 18-9 for linear actuator MFT codes.
*** Longer stroke available. Verify valve travel requirements. Contact Belimo Technical Support for details.

Electronic Fail-Safe Actuators



WGVL

ACTUATOR PART #		AVKB24-3	AVKB120-3	AVKB24-MFT
Control type		On/Off, Floating Point	On/Off, Floating Point	Proportional/MFT
Input signal / Feedback		-	-	Variable
Running time	Motor	90 seconds	90 seconds	Variable
	Fail-Safe	35 seconds	35 seconds	35 seconds
Actuator travel		32mm	32mm	32mm
Actuator noise level		60 dB(A)	60 dB(A)	60 dB(A)
Valve Description				
GVL LINKAGES WITH ELECTRONIC FAIL-SAFE ACTUATORS				
WGVL	Warren Controls Type 20, 22, 30, 32	$1,025.00	$1,475.00	$1,125.00**

**Prices do not reflect additional programming codes surcharge. See page 18-9 for linear actuator MFT codes.

067001 - 04/13 - Subject to change. © Belimo Aircontrols (USA), Inc.

UGLK Retrofit Solution

Components

UGLK Collars			Most Commonly Used Valve Style					
Part Number	Inside Diameter	Description	Style 1	Style 2	Style 3	Style 4	Style 5	Price
UGLK-COL-1005	1.000”	3 setscrews, for frame type		•				$175.00
UGLK-COL-1063	1.063”	3 setscrews, for frame type		•				$175.00
UGLK-COL-1100	1.100”	3 setscrews, for frame type, counterbored top				•		$175.00
UGLK-COL-1255	1.250”	3 setscrews, for frame type		•				$175.00
UGLK-COL-1315	1.315”	3 setscrews, for frame type, can be used with VB7 with shim			•			$175.00
UGLK-COL-1375	1.375”	3 setscrews, for frame type		•				$175.00
UGLK-COL-BC10	1.250”- 16 Thd.	Fits Siebe VB7/VB9. Use on frame type only	•					$175.00
UGLK-COL-HY02	1.370”	1 setscrew, for frame type					•	$175.00
UGLK-COL-LG02	1.740”	1 setscrew, for frame type			•			$175.00
UGLK-COL-LG04	1.740”	1 setscrew, for frame type			•			$175.00
UGLK-COL-JC05	1.070”	3 setscrews, for frame type		•				$175.00
UGLK-COL-JC06	1.562- 14 Thd.	Threaded, brass		•				$175.00
UGLK-COL-JC08	0.760”	3 setscrews, for frame type, counterbored top				•		$175.00
UGLK-COL-JC15	1.070”	Ring, no setscrews		•				$175.00
UGLK-COL-0880	0.880”	3 setscrews, for frame type, counterbored top				•		$175.00
UGLK-COL-WNUT	1.375”- 20 Thd.	Replacement Warren nut. Will not go over damaged threads		•				$175.00
UGLK-COL-AD01	1.250”- 16 Thd.	Fits Siebe VB7/VB9. For VB7 frame only	•					$175.00
UGLK-COL-UNIV	Custom	3 setscrews, for frame type. Must be machined		•	•	•	•	$306.25

* Must reuse clip and set screws.

UGLK Stem Adapters			Most Commonly Used Valve Style					
Part Number	Inside Diameter	Description	Style 1	Style 2	Style 3	Style 4	Style 5	Price
UGLK-STM-1800	1/4”- 28 Stem Thd.	Stem adapter for 1/4”- 28 valve stems	•	•	•	•	•	$98.00
UGLK-STM-1801	3/8”- 24 Stem Thd.	Stem adapter for 3/8”- 24 valve stems	•	•	•	•	•	$98.00
UGLK-STM-1802	1/2”- 20 Stem Thd.	Stem adapter for 1/2”- 20 valve stems	•			•	•	$98.00
UGLK-STM-1803	7/16”- 20 Stem Thd.	Stem adapter for 7/16”- 20 valve stems					•	$98.00
UGLK-STM-1501	3/8”- 24 Stem Thd.	For Warren FLG valves with UGLK		•				$98.00
UGLK-STM-1805	3/8” OD Grooved	Landis 2.5-3” -599 Series			•			$98.00
UGLK-STM-2305	1/2” OD Grooved	Landis 4-6” -599 Series			•			$98.00
UGLK-STM-UNIV	Custom	Must be machined	•	•	•	•	•	$140.00

UGLK Stem Adapters

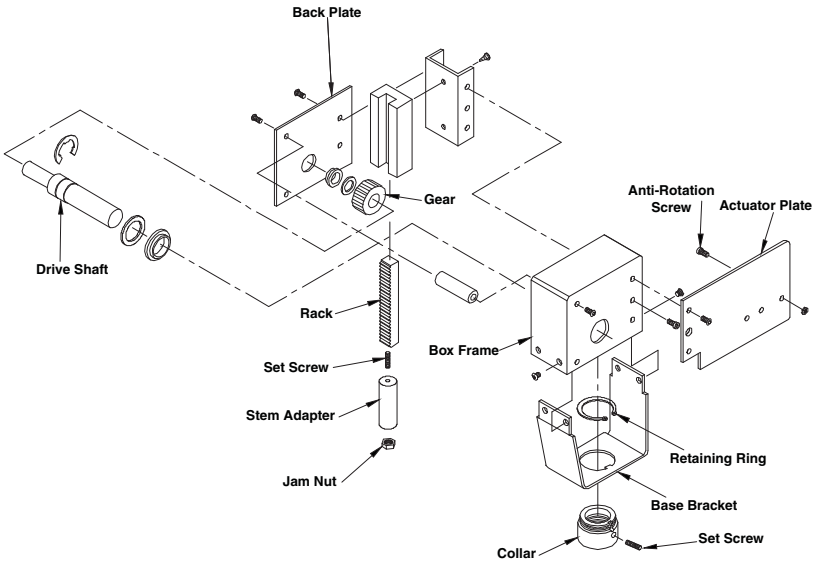

UGLK Collars

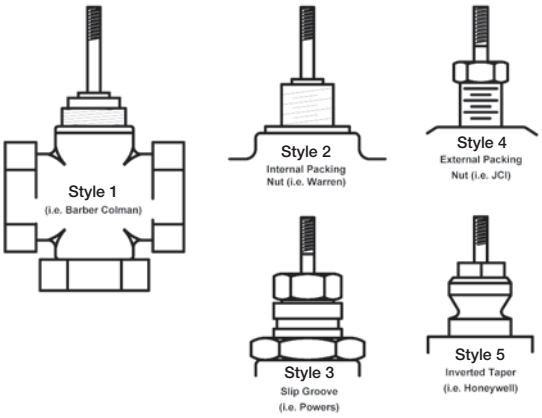

067001 - 04/13 - Subject to change. © Belimo Aircontrols (USA), Inc.

Valve Body Model	Valve Configuration	Size	Body Type	Flow	Fail-Safe	Close-Off psi	Belimo Actuator Series	Belimo Linkage	Linkage List Price
V5011 Series	2-way	½"	NPT	-	No	250	LV	UGVL	PG # 18-11
					Yes	250	LVK	UGVL	PG # 18-11
		¾"	NPT	-	No	211	LV	UGVL	PG # 18-11
					Yes	211	LVK	UGVL	PG # 18-11
		1"	NPT	-	No	92	LV	UGVL	PG # 18-11
						250	SV	UGVL	PG # 18-10
					Yes	92	LVK	UGVL	PG # 18-11
						250	SVK	UGVL	PG # 18-11
		1¼"	NPT	-	No	236	SV	UGVL	PG # 18-10
					Yes	236	SVK	UGVL	PG # 18-11
		1½"	NPT	-	No	160	SV	UGVL	PG # 18-10
					Yes	160	SVK	UGVL	PG # 18-11
		2"	NPT	-	No	85	SV	UGVL	PG # 18-10
					Yes	85	SVK	UGVL	PG # 18-11
		2½"	NPT	-	No	59	SV	UGVL	PG # 18-10
					Yes	59	SVK	UGVL	PG # 18-11
		3"	NPT	-	No	41	SV	UGVL	PG # 18-10
					Yes	41	SVK	UGVL	PG # 18-11
V5011N Series	2-way	½"	NPT	-	No	250	LM	UGLK1806	$575.00
							LV	UGVL	PG # 18-11
					Yes	250	LF	UGLK1806	$575.00
							LVK	UGVL	PG # 18-11
							NF	UGLK1800	$575.00
		¾"	NPT	-	No	153	LM	UGLK1806	$575.00
						211	LV	UGVL	PG # 18-11
						250	NM	UGLK1806	$575.00
					Yes	119	LF	UGLK1806	$575.00
						211	LVK	UGVL	PG # 18-11
						250	NF	UGLK1800	$575.00
		1"	NPT	-	No	92	LV	UGVL	PG # 18-11
						86	LM	UGLK1806	$575.00
						173	NM	UGLK1806	$575.00
						250	AM	UGLK1800	$575.00
							SV	UGVL	PG # 18-10
					Yes	67	LF	UGLK1806	$575.00
						92	LVK	UGVL	PG # 18-11
						173	NF	UGLK1800	$575.00
						250	SVK	UGVL	PG # 18-11
						250	AF	UGLK1800	$575.00
		1¼"	NPT	-	No	55	LM	UGLK1806	$575.00
						110	NM	UGLK1806	$575.00
						221	AM	UGLK1800	$575.00
						236	SV	UGVL	PG # 18-10
					Yes	43	LF	UGLK1806	$575.00
						110	NF	UGLK1800	$575.00
						221	AF	UGLK1800	$575.00
						236	SVK	UGVL	PG # 18-11
		1½"	NPT	-	No	38	LM	UGLK1806	$575.00
						77	NM	UGLK1806	$575.00
						153	AM	UGLK1800	$575.00
						160	SV	UGVL	PG # 18-10
						250	GM	UGLK1800	$575.00
					Yes	77	NF	UGLK1800	$575.00
						30	LF	UGLK1806	$575.00
						153	AF	UGLK1800	$575.00
						160	SVK	UGVL	PG # 18-11
						250	GK	UGLK1800	$575.00
					No	22	LM	UGLK1806	$575.00
						43	NM	UGLK1806	$575.00
						85	SV	UGVL	PG # 18-10
						86	AM	UGLK1800	$575.00
						173	GM	UGLK1800	$575.00

All close-off pressures listed are approximate and based on valve condition and application.

067001 - 04/13 - Subject to change. © Belimo Aircontrols (USA), Inc.

Honeywell

V5011N, V5013, V5013N Series Valves

Linkage/Actuator Selection Guide

Valve Body Model	Valve Configuration	Size	Body Type	Flow	Fail-Safe	Close-Off psi	Belimo Actuator Series	Belimo Linkage	Linkage List Price
V5011N Series	2-way	2”	NPT	-	Yes	17	LF	UGLK1806	$575.00
						43	NF	UGLK1800	$575.00
						85	SVK	UGVL	PG # 18-11
						86	AF	UGLK1800	$575.00
						173	GK	UGLK1800	$575.00
V5013 Series	3-way	½”	NPT	-	No	250	LV	UGVL	PG # 18-11
					Yes	250	LVK	UGVL	PG # 18-11
		¾”	NPT	-	No	211	LV	UGVL	PG # 18-11
					Yes	211	LVK	UGVL	PG # 18-11
		1”	NPT	-	No	92	LV	UGVL	PG # 18-11
						250	SV	UGVL	PG # 18-10
					Yes	92	LVK	UGVL	PG # 18-11
						250	SVK	UGVL	PG # 18-11
		1¼”	NPT	-	No	236	SV	UGVL	PG # 18-10
					Yes	236	SVK	UGVL	PG # 18-11
		1½”	NPT	-	No	160	SV	UGVL	PG # 18-10
					Yes	160	SVK	UGVL	PG # 18-11
		2”	NPT	-	No	85	SV	UGVL	PG # 18-10
					Yes	85	SVK	UGVL	PG # 18-11
		2½”	NPT	-	No	59	SV	UGVL	PG # 18-10
					Yes	59	SVK	UGVL	PG # 18-11
		3”	NPT	-	No	41	SV	UGVL	PG # 18-10
					Yes	41	SVK	UGVL	PG # 18-11
V5013N Series	3-way	½”	NPT	-	No	250	LM	UGLK1806	$575.00
							LV	UGVL	PG # 18-11
					Yes	250	LF	UGLK1806	$575.00
							LVK	UGVL	PG # 18-11
							NF	UGLK1800	$575.00
		¾”	NPT	-	No	153	LM	UGLK1806	$575.00
						211	LV	UGVL	PG # 18-11
						250	NM	UGLK1806	$575.00
					Yes	119	LF	UGLK1806	$575.00
						211	LVK	UGVL	PG # 18-11
						250	NF	UGLK1800	$575.00
		1”	NPT	-	No	92	LV	UGVL	PG # 18-11
						86	LM	UGLK1806	$575.00
						173	NM	UGLK1806	$575.00
						250	AM	UGLK1800	$575.00
							SV	UGVL	PG # 18-10
					Yes	67	LF	UGLK1806	$575.00
						92	LVK	UGVL	PG # 18-11
						173	NF	UGLK1800	$575.00
						250	SVK	UGVL	PG # 18-11
						250	AF	UGLK1800	$575.00
		1¼”	NPT	-	No	55	LM	UGLK1806	$575.00
						110	NM	UGLK1806	$575.00
						221	AM	UGLK1800	$575.00
						236	SV	UGVL	PG # 18-10
					Yes	43	LF	UGLK1806	$575.00
						110	NF	UGLK1800	$575.00
						221	AF	UGLK1800	$575.00
						236	SVK	UGVL	PG # 18-11
		1½”	NPT	-	No	38	LM	UGLK1806	$575.00
						77	NM	UGLK1806	$575.00
						153	AM	UGLK1800	$575.00
						160	SV	UGVL	PG # 18-10
						250	GM	UGLK1800	$575.00
					Yes	77	NF	UGLK1800	$575.00
						30	LF	UGLK1806	$575.00
						153	AF	UGLK1800	$575.00
						160	SVK	UGVL	PG # 18-11
						250	GK	UGLK1800	$575.00
		2”	NPT	-	No	22	LM	UGLK1806	$575.00
						43	NM	UGLK1806	$575.00
						85	SV	UGVL	PG # 18-10
						86	AM	UGLK1800	$575.00
						173	GM	UGLK1800	$575.00

All close-off pressures listed are approximate and based on valve condition and application.

067001- 04/13 - Subject to change. © Belimo Aircontrols (USA), Inc.

Valve Body Model	Valve Configuration	Size	Body Type	Flow	Fail-Safe	Close-Off psi	Belimo Actuator Series	Belimo Linkage	Linkage List Price
V5013N Series	3-way	2"	NPT	-	Yes	17	LF	UGLK1806	$575.00
						43	NF	UGLK1800	$575.00
						85	SVK	UGVL	PG # 18-11
						86	AF	UGLK1800	$575.00
						173	GK	UGLK1800	$575.00
V5011F (1014, 1022, 1030, 1048, 1121, 1139)	2-way	½"	NPT	-	No	250	LM	UGLK1806	$575.00
					Yes	250	LF	UGLK1806	$575.00
							NF	UGLK1800	$575.00
V5011G (1137, 1145, 1152, 1160, 1178, 1186)	2-way	½"	NPT	-	No	250	LM	UGLK1806	$575.00
					Yes	250	LF	UGLK1806	$575.00
							NF	UGLK1800	$575.00
V5011H (1002, 1010)	2-way	½"	NPT	-	No	250	LM	UGLK1806	$575.00
					Yes	250	LF	UGLK1806	$575.00
							NF	UGLK1800	$575.00
V5011J (1012, 1079)	2-way	½"	NPT	-	No	250	LM	UGLK1806	$575.00
					Yes	250	LF	UGLK1806	$575.00
							NF	UGLK1800	$575.00
V5011F (1055, 1147)	2-way	¾"	NPT	-	No	153	LM	UGLK1806	$575.00
						250	NM	UGLK1806	$575.00
					Yes	119	LF	UGLK1806	$575.00
						250	NF	UGLK1800	$575.00
V5011 (H1028, G1194, J1023)	2-way	¾"	NPT	-	No	153	LM	UGLK1806	$575.00
						250	NM	UGLK1806	$575.00
					Yes	119	LF	UGLK1806	$575.00
						250	NF	UGLK1800	$575.00
V5011 (F1063, F1154, H1028, G1194)	2-way	1"	NPT	-	No	86	LM	UGLK1806	$575.00
						173	NM	UGLK1806	$575.00
						250	AM	UGLK1800	$575.00
					Yes	67	LF	UGLK1806	$575.00
						173	NF	UGLK1800	$575.00
						250	AF	UGLK1800	$575.00
V5011F (1071, 1162)	2-way	1¼"	NPT	-	No	55	LM	UGLK1806	$575.00
						110	NM	UGLK1806	$575.00
						221	AM	UGLK1800	$575.00
					Yes	43	LF	UGLK1806	$575.00
						110	NF	UGLK1800	$575.00
						221	AF	UGLK1800	$575.00
V5011 (H1044, G1210, J1049)	2-way	1¼"	NPT	-	No	55	LM	UGLK1806	$575.00
						110	NM	UGLK1806	$575.00
						221	AM	UGLK1800	$575.00
					Yes	43	LF	UGLK1806	$575.00
						110	NF	UGLK1800	$575.00
						221	AF	UGLK1800	$575.00
V5011 (F1089, F1178, G1228)	2-way	1½"	NPT	-	No	38	LM	UGLK1806	$575.00
						77	NM	UGLK1806	$575.00
						153	AM	UGLK1800	$575.00
						250	GM	UGLK1800	$575.00
					Yes	77	NF	UGLK1800	$575.00
						30	LF	UGLK1806	$575.00
						153	AF	UGLK1800	$575.00
						250	GK	UGLK1800	$575.00
V5011 (F1097, F1188, G1103)	2-way	2"	NPT	-	No	22	LM	UGLK1806	$575.00
						43	NM	UGLK1806	$575.00
						86	AM	UGLK1800	$575.00
						173	GM	UGLK1800	$575.00
V5011 (F1097, F1188, G1103)	2-way	2"	NPT	-	Yes	17	LF	UGLK1800	$575.00
						43	NF	UGLK1806	$575.00
						86	AF	UGLK1800	$575.00
						173	GK	UGLK1800	$575.00
V5013F (1004, 1012, 1079)	3-way	½"	NPT	-	No	250	LM	UGLK1806	$575.00
					Yes	250	LF	UGLK1806	$575.00
							NF	UGLK1800	$575.00
V5013F (1020, 1087)	3-way	¾"	NPT	-	No	153	LM	UGLK1806	$575.00
						250	NM	UGLK1806	$575.00
					Yes	119	LF	UGLK1806	$575.00
						250	NF	UGLK1800	$575.00

All close-off pressures listed are approximate and based on valve condition and application.

067001 - 04/13 - Subject to change. © Belimo Aircontrols (USA), Inc.

Honeywell

V5013, V5045, V3350 Series Valves

Linkage/Actuator Selection Guide

5 YEAR WARRANTY

Valve Body Model	Valve Configuration	Size	Body Type	Flow	Fail-Safe	Close-Off psi	Belimo Actuator Series	Belimo Linkage	Linkage List Price
V5013F (1038, 1095)	3-way	1"	NPT	-	No	86	LM	UGLK1806	$575.00
						173	NM	UGLK1806	$575.00
						250	AM	UGLK1800	$575.00
					Yes	67	LF	UGLK1806	$575.00
						173	NF	UGLK1800	$575.00
						250	AF	UGLK1800	$575.00
V5013F (1046, 1103)	3-way	1¼"	NPT	-	No	55	LM	UGLK1806	$575.00
						110	NM	UGLK1806	$575.00
						221	AM	UGLK1800	$575.00
					Yes	43	LF	UGLK1806	$575.00
						110	NF	UGLK1800	$575.00
						221	AF	UGLK1800	$575.00
V5013F (1053, 1111)	3-way	1½"	NPT	-	No	38	LM	UGLK1806	$575.00
						77	NM	UGLK1806	$575.00
						153	AM	UGLK1800	$575.00
						250	GM	UGLK1800	$575.00
					Yes	77	NF	UGLK1800	$575.00
						30	LF	UGLK1806	$575.00
						153	AF	UGLK1800	$575.00
						250	GK	UGLK1800	$575.00
V5013F (1061, 1129)	3-way	2"	NPT	-	No	22	LM	UGLK1806	$575.00
						43	NM	UGLK1806	$575.00
						86	AM	UGLK1800	$575.00
						173	GM	UGLK1800	$575.00
					Yes	17	LF	UGLK1800	$575.00
						43	NF	UGLK1806	$575.00
						86	AF	UGLK1800	$575.00
						173	GK	UGLK1800	$575.00
V5045	2-way	½"	NPT	-	No	250	AM	UGLK1804	$475.00
					Yes	250	NF	UGLK1804	$475.00
		¾"	NPT	-	Yes	250	NF	UGLK1804	$475.00
		1"	NPT	-	No	250	AM	UGLK1804	$475.00
					Yes	244	NF	UGLK1804	$475.00
		1¼"	NPT	-	No	250	AM	UGLK1804	$475.00
					Yes	156	NF	UGLK1804	$475.00
		1½"	NPT	-	No	217	AM	UGLK1804	$475.00
					Yes	217	AF	UGLK1804	$475.00
		2"	NPT	-	No	122	AM	UGLK1804	$475.00
					Yes	122	AF	UGLK1804	$475.00
V3350 (A2009, A2017, B2007, C2013, D2003)	2-way	2½"	Flanged	-	No	55	AM	UGLK1800	$575.00
						110	GM	UGLK1800	$575.00
						196	2*GM	UGLK1870	$725.00
					Yes	55	AF	UGLK1800	$575.00
						110	2*AF	UGLK1870	$725.00
							GK	UGLK1800	$575.00
						196	2*GK	UGLK1870	$725.00
V3350 (A3007, A3015, B3005, C3011, D3001)	2-way	3"	Flanged	-	No	38	AM	UGLK1800	$575.00
						77	GM	UGLK1800	$575.00
						136	2*GM	UGLK1870	$725.00
					Yes	38	AF	UGLK1800	$575.00
						77	2*AF	UGLK1870	$725.00
							GK	UGLK1800	$575.00
						136	2*GK	UGLK1870	$725.00
V3350 (A4005, A4013, B4003, C4019, D4009)	2-way	4"	Flanged	-	No	11	AM	UGLK1802	$575.00
						22	GM	UGLK1802	$575.00
						40	2*GM	UGLK1872	$725.00
					Yes	11	AF	UGLK1802	$575.00
						22	2*AF	UGLK1872	$725.00
							GK	UGLK1802	$575.00
						40	2*GK	UGLK1872	$725.00
V3350 (A5002, A5010, B5000, C5016, D5006)	2-way	5"	Flanged	-	No	14	GM	UGLK1802	$575.00
						25	2*GM	UGLK1872	$725.00
					Yes	7	AF	UGLK1802	$575.00
						14	2*AF	UGLK1872	$725.00
							GK	UGLK1802	$575.00
						25	2*GK	UGLK1872	$725.00

All close-off pressures listed are approximate and based on valve condition and application.

RETROFIT SOLUTIONS

O67001- 04/13 - Subject to change. © Belimo Aircontrols (USA), Inc.

Valve Body Model	Valve Configuration	Size	Body Type	Flow	Fail-Safe	Close-Off psi	Belimo Actuator Series	Belimo Linkage	Linkage List Price
V3350 (A6000, A6008, A6018, C6014, D6004)	2-way	6”	Flanged	-	No	10	GM	UGLK1802	$575.00
						18	2*GM	UGLK1872	$725.00
					Yes	10	2*AF	UGLK1872	$725.00
							GK	UGLK1802	$575.00
						18	2*GK	UGLK1872	$725.00
V3351 (A2008, C2005, D2002)	2-way	2½”	Flanged	-	No	55	AM	UGLK1800	$575.00
						110	GM	UGLK1800	$575.00
						196	2*GM	UGLK1870	$725.00
					Yes	55	AF	UGLK1800	$575.00
						110	2*AF	UGLK1870	$725.00
							GK	UGLK1800	$575.00
						196	2*GK	UGLK1870	$725.00
V3351 (A3006, C3002, C3003)	2-way	3”	Flanged	-	No	38	AM	UGLK1800	$575.00
						77	GM	UGLK1800	$575.00
						136	2*GM	UGLK1870	$725.00
					Yes	38	AF	UGLK1800	$575.00
						77	2*AF	UGLK1870	$725.00
							GK	UGLK1800	$575.00
						136	2*GK	UGLK1870	$725.00
V3351 (A4004, C4000, C4001)	2-way	4”	Flanged	-	No	11	AM	UGLK1802	$575.00
						22	GM	UGLK1802	$575.00
						40	2*GM	UGLK1872	$725.00
					Yes	11	AF	UGLK1802	$575.00
						22	2*AF	UGLK1872	$725.00
							GK	UGLK1802	$575.00
						40	2*GK	UGLK1872	$725.00
V3351 (A5001, C5008, D5005)	2-way	5”	Flanged	-	No	14	GM	UGLK1802	$575.00
						25	2*GM	UGLK1872	$725.00
					Yes	7	AF	UGLK1802	$575.00
						14	2*AF	UGLK1872	$725.00
							GK	UGLK1802	$575.00
						25	2*GK	UGLK1872	$725.00
V3351 (A6009, C6005, C6006)	2-way	6”	Flanged	-	No	10	GM	UGLK1802	$575.00
						18	2*GM	UGLK1872	$725.00
					Yes	10	2*AF	UGLK1872	$725.00
							GK	UGLK1802	$575.00
						18	2*GK	UGLK1872	$725.00
V3360E2008, V3361E2007	3-way	2½”	Flanged	-	No	55	AM	UGLK1800	$575.00
						110	GM	UGLK1800	$575.00
						196	2*GM	UGLK1870	$725.00
					Yes	55	AF	UGLK1800	$575.00
						110	2*AF	UGLK1870	$725.00
							GK	UGLK1800	$575.00
						196	2*GK	UGLK1870	$725.00
V3360E3006, V3361E3005	3-way	3”	Flanged	-	No	38	AM	UGLK1800	$575.00
						77	GM	UGLK1800	$575.00
						136	2*GM	UGLK1870	$725.00
					Yes	38	AF	UGLK1800	$575.00
						77	2*AF	UGLK1870	$725.00
							GK	UGLK1800	$575.00
						136	2*GK	UGLK1870	$725.00
V3360E4004, V3361E4003	3-way	4”	Flanged	-	No	11	AM	UGLK1802	$575.00
						22	GM	UGLK1802	$575.00
						40	2*GM	UGLK1872	$725.00
					Yes	11	AF	UGLK1802	$575.00
						22	2*AF	UGLK1872	$725.00
							GK	UGLK1802	$575.00
						40	2*GK	UGLK1872	$725.00
V3360E5001, V3361E5000	3-way	5”	Flanged	-	No	14	GM	UGLK1802	$575.00
						25	2*GM	UGLK1872	$725.00
					Yes	7	AF	UGLK1802	$575.00
						14	2*AF	UGLK1872	$725.00
							GK	UGLK1802	$575.00
						25	2*GK	UGLK1872	$725.00

All close-off pressures listed are approximate and based on valve condition and application.

067001 - 04/13 - Subject to change. © Belimo Aircontrols (USA), Inc.

Honeywell

V3360, V3450, V3451 Series Valves

Linkage/Actuator Selection Guide

Valve Body Model	Valve Configuration	Size	Body Type	Flow	Fail-Safe	Close-Off psi	Belimo Actuator Series	Belimo Linkage	Linkage List Price
V3360E6009, V3361E6008	3-way	6”	Flanged	-	No	10	GM	UGLK1802	$575.00
						18	2*GM	UGLK1872	$725.00
					Yes	10	2*AF	UGLK1872	$725.00
							GK	UGLK1802	$575.00
						18	2*GK	UGLK1872	$725.00
V3450 (A2008, A2016, B2006, C2012, D2002)	2-way	2½”	Flanged	-	No	55	AM	UGLK1800	$575.00
						110	GM	UGLK1800	$575.00
						196	2*GM	UGLK1870	$725.00
					Yes	55	AF	UGLK1800	$575.00
						110	2*AF	UGLK1870	$725.00
							GK	UGLK1800	$575.00
						196	2*GK	UGLK1870	$725.00
V3450 (A3006, A3014, B3004, C3010, D3000)	2-way	3”	Flanged	-	No	38	AM	UGLK1800	$575.00
						77	GM	UGLK1800	$575.00
						136	2*GM	UGLK1870	$725.00
					Yes	38	AF	UGLK1800	$575.00
						77	2*AF	UGLK1870	$725.00
							GK	UGLK1800	$575.00
						136	2*GK	UGLK1870	$725.00
V3450 (A4004, A4012, B4002, C4018, D4008)	2-way	4”	Flanged	-	No	11	AM	UGLK1802	$575.00
						22	GM	UGLK1802	$575.00
						40	2*GM	UGLK1872	$725.00
					Yes	11	AF	UGLK1802	$575.00
						22	2*AF	UGLK1872	$725.00
							GK	UGLK1802	$575.00
						40	2*GK	UGLK1872	$725.00
V3450 (A5001, A5019, B5009, C5015, D5005)	2-way	5”	Flanged	-	No	14	GM	UGLK1802	$575.00
						25	2*GM	UGLK1872	$725.00
					Yes	7	AF	UGLK1802	$575.00
						14	2*AF	UGLK1872	$725.00
							GK	UGLK1802	$575.00
						25	2*GK	UGLK1872	$725.00
V3450 (A6009, A6007, A6017, C6013, D6003)	2-way	6”	Flanged	-	No	10	GM	UGLK1802	$575.00
						18	2*GM	UGLK1872	$725.00
					Yes	10	2*AF	UGLK1872	$725.00
							GK	UGLK1802	$575.00
						18	2*GK	UGLK1872	$725.00
V3451 (A2007, C2003, C2004)	2-way	2½”	Flanged	-	No	55	AM	UGLK1800	$575.00
						110	GM	UGLK1800	$575.00
						196	2*GM	UGLK1870	$725.00
					Yes	55	AF	UGLK1800	$575.00
						110	2*AF	UGLK1870	$725.00
							GK	UGLK1800	$575.00
						196	2*GK	UGLK1870	$725.00
V3451 (A3005, C3001, C3002)	2-way	3”	Flanged	-	No	38	AM	UGLK1800	$575.00
						77	GM	UGLK1800	$575.00
						136	2*GM	UGLK1870	$725.00
V3451 (A3005, C3001, C3002)	2-way	3”	Flanged	-	Yes	38	AF	UGLK1800	$575.00
						77	2*AF	UGLK1870	$725.00
							GK	UGLK1800	$575.00
						136	2*GK	UGLK1870	$725.00
V3451 (A4003, C4000, C4009)	2-way	4”	Flanged	-	No	11	AM	UGLK1802	$575.00
						22	GM	UGLK1802	$575.00
						40	2*GM	UGLK1872	$725.00
					Yes	11	AF	UGLK1802	$575.00
						22	2*AF	UGLK1872	$725.00
							GK	UGLK1802	$575.00
						40	2*GK	UGLK1872	$725.00
V3451 (A5000, C5006, C5007)	2-way	5”	Flanged	-	No	14	GM	UGLK1802	$575.00
						25	2*GM	UGLK1872	$725.00
					Yes	7	AF	UGLK1802	$575.00
						14	2*AF	UGLK1872	$725.00
							GK	UGLK1802	$575.00
						25	2*GK	UGLK1872	$725.00

All close-off pressures listed are approximate and based on valve condition and application.

O67001- 04/13 - Subject to change. © Belimo Aircontrols (USA), Inc.

Valve Body Model	Valve Configuration	Size	Body Type	Flow	Fail-Safe	Close-Off psi	Belimo Actuator Series	Belimo Linkage	Linkage List Price
V3451 (A6008, C6004, C6005)	2-way	6”	Flanged	-	No	10	GM	UGLK1802	$575.00
						18	2*GM	UGLK1872	$725.00
					Yes	10	2*AF	UGLK1872	$725.00
							GK	UGLK1802	$575.00
						18	2*GK	UGLK1872	$725.00
V3460E2007, V3461E2006	3-way	2½”	Flanged	-	No	55	AM	UGLK1800	$575.00
						110	GM	UGLK1800	$575.00
						196	2*GM	UGLK1870	$725.00
					Yes	55	AF	UGLK1800	$575.00
						110	2*AF	UGLK1870	$725.00
							GK	UGLK1800	$575.00
						196	2*GK	UGLK1870	$725.00
V3460E3005, V3461E3004	3-way	3”	Flanged	-	No	38	AM	UGLK1800	$575.00
						77	GM	UGLK1800	$575.00
						136	2*GM	UGLK1870	$725.00
					Yes	38	AF	UGLK1800	$575.00
						77	2*AF	UGLK1870	$725.00
							GK	UGLK1800	$575.00
						136	2*GK	UGLK1870	$725.00
V3460E4003, V3461E4002	3-way	4”	Flanged	-	No	11	AM	UGLK1802	$575.00
						22	GM	UGLK1802	$575.00
						40	2*GM	UGLK1872	$725.00
					Yes	11	AF	UGLK1802	$575.00
						22	2*AF	UGLK1872	$725.00
							GK	UGLK1802	$575.00
						40	2*GK	UGLK1872	$725.00
V3460E5000, V3461E5009	3-way	5”	Flanged	-	No	14	GM	UGLK1802	$575.00
						25	2*GM	UGLK1872	$725.00
					Yes	7	AF	UGLK1802	$575.00
						14	2*AF	UGLK1872	$725.00
							GK	UGLK1802	$575.00
						25	2*GK	UGLK1872	$725.00
V3460E6008, V3461E6007	3-way	6”	Flanged	-	No	10	GM	UGLK1802	$575.00
						18	2*GM	UGLK1872	$725.00
					Yes	10	2*AF	UGLK1872	$725.00
							GK	UGLK1802	$575.00
						18	2*GK	UGLK1872	$725.00
V5011 (A1734, F1105, F1196, G1111)	2-way	2½”	Flanged/NPT	-	No	55	AM	UGLK1800	$575.00
						110	GM	UGLK1800	$575.00
						196	2*GM	UGLK1870	$725.00
					Yes	55	AF	UGLK1800	$575.00
						110	2*AF	UGLK1870	$725.00
							GK	UGLK1800	$575.00
						196	2*GK	UGLK1870	$725.00
V5011 (A1767, F1113, F1204, G1129)	2-way	3”	Flanged/NPT	-	No	38	AM	UGLK1800	$575.00
						77	GM	UGLK1800	$575.00
						136	2*GM	UGLK1870	$725.00
					Yes	38	AF	UGLK1800	$575.00
						77	2*AF	UGLK1870	$725.00
							GK	UGLK1800	$575.00
						136	2*GK	UGLK1870	$725.00
V5011 (A1858, B1013)	2-way	4”	Flanged	-	No	11	AM	UGLK1802	$575.00
						22	GM	UGLK1802	$575.00
						40	2*GM	UGLK1872	$725.00
					Yes	11	AF	UGLK1802	$575.00
						22	2*AF	UGLK1872	$725.00
							GK	UGLK1802	$575.00
						40	2*GK	UGLK1872	$725.00
V5011 (A1882, B1047)	2-way	5”	Flanged	-	No	14	GM	UGLK1802	$575.00
						25	2*GM	UGLK1872	$725.00
					Yes	7	AF	UGLK1802	$575.00
						14	2*AF	UGLK1872	$725.00
							GK	UGLK1802	$575.00
						25	2*GK	UGLK1872	$725.00

All close-off pressures listed are approximate and based on valve condition and application.

067001 - 04/13 - Subject to change. © Belimo Aircontrols (USA), Inc.

Honeywell

V5011, V5013 Series Valves

Linkage/Actuator Selection Guide

Johnson Controls

V52… Series Valves

Linkage/Actuator Selection Guide

5 YEAR WARRANTY

Valve Body Model	Valve Configuration	Size	Body Type	Flow	Fail-Safe	Close-Off psi	Belimo Actuator Series	Belimo Linkage	Linkage List Price
V5011 (A1916, B1078)	2-way	6”	Flanged	-	No	10	GM	UGLK1802	$575.00
						18	2*GM	UGLK1872	$725.00
					Yes	10	2*AF	UGLK1872	$725.00
							GK	UGLK1802	$575.00
						18	2*GK	UGLK1872	$725.00
V5013 (B1003, C1001)	3-way	2½”	Flanged	-	No	55	AM	UGLK1800	$575.00
						110	GM	UGLK1800	$575.00
						196	2*GM	UGLK1870	$725.00
					Yes	55	AF	UGLK1800	$575.00
						110	2*AF	UGLK1870	$725.00
							GK	UGLK1800	$575.00
						196	2*GK	UGLK1870	$725.00
V5013 (B1011, C1019)	3-way	3”	Flanged	-	No	38	AM	UGLK1800	$575.00
						77	GM	UGLK1800	$575.00
						136	2*GM	UGLK1870	$725.00
					Yes	38	AF	UGLK1800	$575.00
						77	2*AF	UGLK1870	$725.00
							GK	UGLK1800	$575.00
						136	2*GK	UGLK1870	$725.00
V5013 (B1029, C1027)	3-way	4”	Flanged	-	No	11	AM	UGLK1802	$575.00
						22	GM	UGLK1802	$575.00
						40	2*GM	UGLK1872	$725.00
					Yes	11	AF	UGLK1802	$575.00
						22	2*AF	UGLK1872	$725.00
							GK	UGLK1802	$575.00
						40	2*GK	UGLK1872	$725.00
V5013 (B1037, C1035)	3-way	5”	Flanged	-	No	14	GM	UGLK1802	$575.00
						25	2*GM	UGLK1872	$725.00
					Yes	7	AF	UGLK1802	$575.00
						14	2*AF	UGLK1872	$725.00
							GK	UGLK1802	$575.00
						25	2*GK	UGLK1872	$725.00
V5013 (B1045, C1043)	3-way	6”	Flanged	-	No	10	GM	UGLK1802	$575.00
						18	2*GM	UGLK1872	$725.00
					Yes	10	2*AF	UGLK1872	$725.00
							GK	UGLK1802	$575.00
						18	2*GK	UGLK1872	$725.00
JOHNSON CONTROLS									
V-5252-12	2-way	3”	Flanged	PDTC	No	26	AM	UGLK1410	$525.00
						52	GM	UGLK1410	$525.00
						93	2*GM	UGLK1476	$725.00
					Yes	26	AF	UGLK1410	$525.00
						52	2*AF	UGLK1476	$725.00
							GK	UGLK1410	$525.00
						93	2*GK	UGLK1476	$725.00
V-5252-13	2-way	3”	Flanged	PDTC	No	26	AM	UGLK1410	$525.00
						52	GM	UGLK1410	$525.00
						93	2*GM	UGLK1476	$725.00
					Yes	26	AF	UGLK1410	$525.00
						52	2*AF	UGLK1476	$725.00
							GK	UGLK1410	$525.00
						93	2*GK	UGLK1476	$725.00
V-5252-35	2-way	3”	Flanged	PDTC	No	26	AM	UGLK1410	$525.00
						52	GM	UGLK1410	$525.00
						93	2*GM	UGLK1476	$725.00
					Yes	26	AF	UGLK1410	$525.00
						52	2*AF	UGLK1476	$725.00
							GK	UGLK1410	$525.00
						93	2*GK	UGLK1476	$725.00
V-5252-14	2-way	4”	Flanged	PDTC	No	15	AM	UGLK1410	$525.00
						29	GM	UGLK1410	$525.00
						52	2*GM	UGLK1476	$725.00
					Yes	15	AF	UGLK1410	$525.00
						29	2*AF	UGLK1476	$725.00
							GK	UGLK1410	$525.00
						52	2*GK	UGLK1476	$725.00

All close-off pressures listed are approximate and based on valve condition and application.

PDTO = Push down to open PDTC = Push down to close

RETROFIT SOLUTIONS

067001- 04/13 - Subject to change. © Belimo Aircontrols (USA), Inc.

Valve Body Model	Valve Configuration	Size	Body Type	Flow	Fail-Safe	Close-Off psi	Belimo Actuator Series	Belimo Linkage	Linkage List Price
V-5252-36	2-way	4"	Flanged	PDTC	No	15	AM	UGLK1410	$525.00
						29	GM	UGLK1410	$525.00
						52	2*GM	UGLK1476	$725.00
					Yes	15	AF	UGLK1410	$525.00
						29	2*AF	UGLK1476	$725.00
							GK	UGLK1410	$525.00
						52	2*GK	UGLK1476	$725.00
V-5252-17	2-way	5"	Flanged	PDTC	No	14	GM	UGLK1414	$525.00
						25	2*GM	UGLK1480	$725.00
					Yes	7	AF	UGLK1414	$525.00
						14	2*AF	UGLK1480	$725.00
							GK	UGLK1414	$525.00
						25	2*GK	UGLK1480	$725.00
V-5252-18	2-way	5"	Flanged	PDTC	No	14	GM	UGLK1414	$525.00
						25	2*GM	UGLK1480	$725.00
					Yes	7	AF	UGLK1414	$525.00
						14	2*AF	UGLK1480	$725.00
							GK	UGLK1414	$525.00
						25	2*GK	UGLK1480	$725.00
V-5252-38	2-way	5"	Flanged	PDTC	No	14	GM	UGLK1414	$525.00
						25	2*GM	UGLK1480	$725.00
					Yes	7	AF	UGLK1414	$525.00
						14	2*AF	UGLK1480	$725.00
							GK	UGLK1414	$525.00
						25	2*GK	UGLK1480	$725.00
V-5252-19	2-way	6"	Flanged	PDTC	No	10	GM	UGLK1414	$525.00
						18	2*GM	UGLK1480	$725.00
					Yes	10	2*AF	UGLK1480	$725.00
							GK	UGLK1414	$525.00
						18	2*GK	UGLK1480	$725.00
V-5252-39	2-way	6"	Flanged	PDTC	No	10	GM	UGLK1414	$525.00
						18	2*GM	UGLK1480	$725.00
					Yes	10	2*AF	UGLK1480	$725.00
							GK	UGLK1414	$525.00
						18	2*GK	UGLK1480	$725.00
V-5462-8	2-way	3"	Flanged	PDTO	No	26	AM	UGLK1410	$525.00
						52	GM	UGLK1410	$525.00
						93	2*GM	UGLK1476	$725.00
					Yes	26	AF	UGLK1410	$525.00
						52	2*AF	UGLK1476	$725.00
							GK	UGLK1410	$525.00
						93	2*GK	UGLK1476	$725.00
V-5462-9	2-way	3"	Flanged	PDTO	No	26	AM	UGLK1410	$525.00
						52	GM	UGLK1410	$525.00
						93	2*GM	UGLK1476	$725.00
					Yes	26	AF	UGLK1410	$525.00
						52	2*AF	UGLK1476	$725.00
							GK	UGLK1410	$525.00
						93	2*GK	UGLK1476	$725.00
V-5462-35	2-way	3"	Flanged	PDTO	No	26	AM	UGLK1410	$525.00
						52	GM	UGLK1410	$525.00
						93	2*GM	UGLK1476	$725.00
					Yes	26	AF	UGLK1410	$525.00
						52	2*AF	UGLK1476	$725.00
							GK	UGLK1410	$525.00
						93	2*GK	UGLK1476	$725.00
V-5462-11	2-way	4"	Flanged	PDTO	No	15	AM	UGLK1410	$525.00
						29	GM	UGLK1410	$525.00
						52	2*GM	UGLK1476	$725.00
					Yes	15	AF	UGLK1410	$525.00
						29	2*AF	UGLK1476	$725.00
							GK	UGLK1410	$525.00
						52	2*GK	UGLK1476	$725.00
V-5462-12	2-way	4"	Flanged	PDTO	No	15	AM	UGLK1410	$525.00
						29	GM	UGLK1410	$525.00
						52	2*GM	UGLK1476	$725.00

All close-off pressures listed are approximate and based on valve condition and application.

PDTO = Push down to open PDTC = Push down to close

067001 - 04/13 - Subject to change. © Belimo Aircontrols (USA), Inc.

Johnson Controls

V-54…, V-58… Series Valves

Linkage/Actuator Selection Guide

Valve Body Model	Valve Configuration	Size	Body Type	Flow	Fail-Safe	Close-Off psi	Belimo Actuator Series	Belimo Linkage	Linkage List Price
V-5462-12	2-way	4”	Flanged	PDTO	Yes	15	AF	UGLK1410	$525.00
						29	2*AF	UGLK1476	$725.00
							GK	UGLK1410	$525.00
						52	2*GK	UGLK1476	$725.00
V-5462-37	2-way	4”	Flanged	PDTO	No	15	AM	UGLK1410	$525.00
						29	GM	UGLK1410	$525.00
						52	2*GM	UGLK1476	$725.00
					Yes	15	AF	UGLK1410	$525.00
						29	2*AF	UGLK1476	$725.00
							GK	UGLK1410	$525.00
						52	2*GK	UGLK1476	$725.00
V-5462-15	2-way	5”	Flanged	PDTO	No	14	GM	UGLK1414	$525.00
						25	2*GM	UGLK1480	$725.00
					Yes	7	AF	UGLK1414	$525.00
						14	2*AF	UGLK1480	$725.00
							GK	UGLK1414	$525.00
						25	2*GK	UGLK1480	$725.00
V-5462-16	2-way	5”	Flanged	PDTO	No	14	GM	UGLK1414	$525.00
						25	2*GM	UGLK1480	$725.00
					Yes	7	AF	UGLK1414	$525.00
						14	2*AF	UGLK1480	$725.00
							GK	UGLK1414	$525.00
						25	2*GK	UGLK1480	$725.00
V-5462-39	2-way	5”	Flanged	PDTO	No	14	GM	UGLK1414	$525.00
						25	2*GM	UGLK1480	$725.00
					Yes	7	AF	UGLK1414	$525.00
						14	2*AF	UGLK1480	$725.00
							GK	UGLK1414	$525.00
						25	2*GK	UGLK1480	$725.00
V-5462-17	2-way	6”	Flanged	PDTO	No	10	GM	UGLK1414	$525.00
						18	2*GM	UGLK1480	$725.00
					Yes	10	2*AF	UGLK1480	$725.00
							GK	UGLK1414	$525.00
						18	2*GK	UGLK1480	$725.00
V-5462-18	2-way	6”	Flanged	PDTO	No	10	GM	UGLK1414	$525.00
						18	2*GM	UGLK1480	$725.00
					Yes	10	2*AF	UGLK1480	$725.00
							GK	UGLK1414	$525.00
						18	2*GK	UGLK1480	$725.00
V-5462-40	2-way	6”	Flanged	PDTO	No	10	GM	UGLK1414	$525.00
						18	2*GM	UGLK1480	$725.00
					Yes	10	2*AF	UGLK1480	$725.00
							GK	UGLK1414	$525.00
						18	2*GK	UGLK1480	$725.00
V-5842-9	3-way	3”	Flanged	Mixing	No	26	AM	UGLK1410	$525.00
						52	GM	UGLK1410	$525.00
						93	2*GM	UGLK1476	$725.00
					Yes	26	AF	UGLK1410	$525.00
						52	2*AF	UGLK1476	$725.00
							GK	UGLK1410	$525.00
						93	2*GK	UGLK1476	$725.00
V-5842-10	3-way	3”	Flanged	Mixing	No	26	AM	UGLK1410	$525.00
						52	GM	UGLK1410	$525.00
						93	2*GM	UGLK1476	$725.00
					Yes	26	AF	UGLK1410	$525.00
						52	2*AF	UGLK1476	$725.00
							GK	UGLK1410	$525.00
						93	2*GK	UGLK1476	$725.00
V-5842-32	3-way	3”	Flanged	Mixing	No	26	AM	UGLK1410	$525.00
						52	GM	UGLK1410	$525.00
						93	2*GM	UGLK1476	$725.00
					Yes	26	AF	UGLK1410	$525.00
						52	2*AF	UGLK1476	$725.00
							GK	UGLK1410	$525.00
						93	2*GK	UGLK1476	$725.00

All close-off pressures listed are approximate and based on valve condition and application.

PDTO = Push down to open PDTC = Push down to close

067001- 04/13 - Subject to change. © Belimo Aircontrols (USA), Inc.

Valve Body Model	Valve Configuration	Size	Body Type	Flow	Fail-Safe	Close-Off psi	Belimo Actuator Series	Belimo Linkage	Linkage List Price
V-5842-13	3-way	5"	Flanged	Mixing	No	14	GM	UGLK1414	$525.00
						25	2*GM	UGLK1480	$725.00
					Yes	7	AF	UGLK1414	$525.00
						14	2*AF	UGLK1480	$725.00
							GK	UGLK1414	$525.00
						25	2*GK	UGLK1480	$725.00
V-5842-14	3-way	5"	Flanged	Mixing	No	14	GM	UGLK1414	$525.00
						25	2*GM	UGLK1480	$725.00
					Yes	7	AF	UGLK1414	$525.00
						14	2*AF	UGLK1480	$725.00
							GK	UGLK1414	$525.00
						25	2*GK	UGLK1480	$725.00
V-5842-35	3-way	5"	Flanged	Mixing	No	14	GM	UGLK1414	$525.00
						25	2*GM	UGLK1480	$725.00
					Yes	7	AF	UGLK1414	$525.00
						14	2*AF	UGLK1480	$725.00
							GK	UGLK1414	$525.00
						25	2*GK	UGLK1480	$725.00
V-5842-15	3-way	6"	Flanged	Mixing	No	10	GM	UGLK1414	$525.00
						18	2*GM	UGLK1480	$725.00
					Yes	10	2*AF	UGLK1480	$725.00
							GK	UGLK1414	$525.00
						18	2*GK	UGLK1480	$725.00
V-5842-16	3-way	6"	Flanged	Mixing	No	10	GM	UGLK1414	$525.00
						18	2*GM	UGLK1480	$725.00
					Yes	10	2*AF	UGLK1480	$725.00
							GK	UGLK1414	$525.00
						18	2*GK	UGLK1480	$725.00
V-5842-36	3-way	6"	Flanged	Mixing	No	10	GM	UGLK1414	$525.00
						18	2*GM	UGLK1480	$725.00
					Yes	10	2*AF	UGLK1480	$725.00
							GK	UGLK1414	$525.00
						18	2*GK	UGLK1480	$725.00
VB-3752-22	2-way	3"	Flanged	PDTC	No	26	AM	UGLK1410	$525.00
						52	GM	UGLK1410	$525.00
						93	2*GM	UGLK1476	$725.00
					Yes	26	AF	UGLK1410	$525.00
						52	2*AF	UGLK1476	$725.00
							GK	UGLK1410	$525.00
						93	2*GK	UGLK1476	$725.00
VB-3752-25	2-way	4"	Flanged	PDTC	No	15	AM	UGLK1410	$525.00
						29	GM	UGLK1410	$525.00
						52	2*GM	UGLK1476	$725.00
					Yes	15	AF	UGLK1410	$525.00
						29	2*AF	UGLK1476	$725.00
							GK	UGLK1410	$525.00
						52	2*GK	UGLK1476	$725.00
VB-3752-28	2-way	5"	Flanged	PDTC	No	14	GM	UGLK1414	$525.00
						25	2*GM	UGLK1480	$725.00
					Yes	7	AF	UGLK1414	$525.00
						14	2*AF	UGLK1480	$725.00
							GK	UGLK1414	$525.00
						25	2*GK	UGLK1480	$725.00
VB-3752-31	2-way	6"	Flanged	PDTC	No	10	GM	UGLK1414	$525.00
						18	2*GM	UGLK1480	$725.00
					Yes	10	2*AF	UGLK1480	$725.00
							GK	UGLK1414	$525.00
						18	2*GK	UGLK1480	$725.00
VB-3970-14	2-way	3"	Flanged	PDTO	No	26	AM	UGLK1410	$525.00
						52	GM	UGLK1410	$525.00
						93	2*GM	UGLK1476	$725.00
					Yes	26	AF	UGLK1410	$525.00
						52	2*AF	UGLK1476	$725.00
							GK	UGLK1410	$525.00
						93	2*GK	UGLK1476	$725.00

All close-off pressures listed are approximate and based on valve condition and application.

PDTO = Push down to open PDTC = Push down to close

067001 - 04/13 - Subject to change. © Belimo Aircontrols (USA), Inc.

Johnson Controls

VB-39…, VB-43…, VG22… Series Valves

Linkage/Actuator Selection Guide

5 YEAR WARRANTY

Valve Body Model	Valve Configuration	Size	Body Type	Flow	Fail-Safe	Close-Off psi	Belimo Actuator Series	Belimo Linkage	Linkage List Price
VB-3970-17	2-way	4”	Flanged	PDTO	No	15	AM	UGLK1410	$525.00
						29	GM	UGLK1410	$525.00
						52	2*GM	UGLK1476	$725.00
					Yes	15	AF	UGLK1410	$525.00
						29	2*AF	UGLK1476	$725.00
							GK	UGLK1410	$525.00
						52	2*GK	UGLK1476	$725.00
VB-3970-20	2-way	5”	Flanged	PDTO	No	14	GM	UGLK1414	$525.00
						25	2*GM	UGLK1480	$725.00
					Yes	7	AF	UGLK1414	$525.00
						14	2*AF	UGLK1480	$725.00
							GK	UGLK1414	$525.00
						25	2*GK	UGLK1480	$725.00
VB-3970-23	2-way	6”	Flanged	PDTO	No	10	GM	UGLK1414	$525.00
						18	2*GM	UGLK1480	$725.00
					Yes	10	2*AF	UGLK1480	$725.00
							GK	UGLK1414	$525.00
						18	2*GK	UGLK1480	$725.00
VB-4322-11	3-way	3”	Flanged	Mixing	No	26	AM	UGLK1410	$525.00
						52	GM	UGLK1410	$525.00
						93	2*GM	UGLK1476	$725.00
					Yes	26	AF	UGLK1410	$525.00
						52	2*AF	UGLK1476	$725.00
							GK	UGLK1410	$525.00
						93	2*GK	UGLK1476	$725.00
VB-4322-13	3-way	4”	Flanged	Mixing	No	15	AM	UGLK1410	$525.00
						29	GM	UGLK1410	$525.00
						52	2*GM	UGLK1476	$725.00
					Yes	15	AF	UGLK1410	$525.00
						29	2*AF	UGLK1476	$725.00
							GK	UGLK1410	$525.00
						52	2*GK	UGLK1476	$725.00
VB-4322-18	3-way	6”	Flanged	Mixing	No	10	GM	UGLK1414	$525.00
						18	2*GM	UGLK1480	$725.00
					Yes	10	2*AF	UGLK1480	$725.00
							GK	UGLK1414	$525.00
						18	2*GK	UGLK1480	$725.00
VB-4322-19	3-way	5”	Flanged	Mixing	No	14	GM	UGLK1414	$525.00
						25	2*GM	UGLK1480	$725.00
					Yes	7	AF	UGLK1414	$525.00
						14	2*AF	UGLK1480	$725.00
							GK	UGLK1414	$525.00
						25	2*GK	UGLK1480	$725.00
VG2231 UM	2-way	3”	Flanged	PDTC	No	26	AM	UGLK1410	$525.00
						52	GM	UGLK1410	$525.00
						93	2*GM	UGLK1476	$725.00
					Yes	26	AF	UGLK1410	$525.00
						52	2*AF	UGLK1476	$725.00
							GK	UGLK1410	$525.00
						93	2*GK	UGLK1476	$725.00
VG2231 VM	2-way	4”	Flanged	PDTC	No	15	AM	UGLK1410	$525.00
						29	GM	UGLK1410	$525.00
						52	2*GM	UGLK1476	$725.00
					Yes	15	AF	UGLK1410	$525.00
						29	2*AF	UGLK1476	$725.00
							GK	UGLK1410	$525.00
						52	2*GK	UGLK1476	$725.00
VG2231 WN	2-way	5”	Flanged	PDTC	No	14	GM	UGLK1414	$525.00
						25	2*GM	UGLK1480	$725.00
					Yes	7	AF	UGLK1414	$525.00
						14	2*AF	UGLK1480	$725.00
							GK	UGLK1414	$525.00
						25	2*GK	UGLK1480	$725.00
VG2231 YN	2-way	6”	Flanged	PDTC	No	10	GM	UGLK1414	$525.00
						18	2*GM	UGLK1480	$725.00

All close-off pressures listed are approximate and based on valve condition and application.

PDTO = Push down to open PDTC = Push down to close

RETROFIT SOLUTIONS

O67001- 04/13 - Subject to change. © Belimo Aircontrols (USA), Inc.

Valve Body Model	Valve Configuration	Size	Body Type	Flow	Fail-Safe	Close-Off psi	Belimo Actuator Series	Belimo Linkage	Linkage List Price
VG2231 YN	2-way	6"	Flanged	PDTC	Yes	10	2*AF	UGLK1480	$725.00
							GK	UGLK1414	$525.00
						18	2*GK	UGLK1480	$725.00
VG2431 UM	2-way	3"	Flanged	PDTO	No	26	AM	UGLK1410	$525.00
						52	GM	UGLK1410	$525.00
						93	2*GM	UGLK1476	$725.00
					Yes	26	AF	UGLK1410	$525.00
						52	2*AF	UGLK1476	$725.00
							GK	UGLK1410	$525.00
						93	2*GK	UGLK1476	$725.00
VG2431 VM	2-way	4"	Flanged	PDTO	No	15	AM	UGLK1410	$525.00
						29	GM	UGLK1410	$525.00
						52	2*GM	UGLK1476	$725.00
					Yes	15	AF	UGLK1410	$525.00
						29	2*AF	UGLK1476	$725.00
							GK	UGLK1410	$525.00
						52	2*GK	UGLK1476	$725.00
VG2431 WN	2-way	5"	Flanged	PDTO	No	14	GM	UGLK1414	$525.00
						25	2*GM	UGLK1480	$725.00
					Yes	7	AF	UGLK1414	$525.00
						14	2*AF	UGLK1480	$725.00
							GK	UGLK1414	$525.00
						25	2*GK	UGLK1480	$725.00
VG2431 YN	2-way	6"	Flanged	PDTO	No	10	GM	UGLK1414	$525.00
						18	2*GM	UGLK1480	$725.00
					Yes	10	2*AF	UGLK1480	$725.00
							GK	UGLK1414	$525.00
						18	2*GK	UGLK1480	$725.00
VG2831 UM	3-way	3"	Flanged	Mixing	No	26	AM	UGLK1410	$525.00
						52	GM	UGLK1410	$525.00
						93	2*GM	UGLK1476	$725.00
					Yes	26	AF	UGLK1410	$525.00
						52	2*AF	UGLK1476	$725.00
							GK	UGLK1410	$525.00
						93	2*GK	UGLK1476	$725.00
VG2831 VM	3-way	4"	Flanged	Mixing	No	15	AM	UGLK1410	$525.00
						29	GM	UGLK1410	$525.00
						52	2*GM	UGLK1476	$725.00
					Yes	15	AF	UGLK1410	$525.00
						29	2*AF	UGLK1476	$725.00
							GK	UGLK1410	$525.00
						52	2*GK	UGLK1476	$725.00
VG2831 WN	3-way	5"	Flanged	Mixing	No	14	GM	UGLK1414	$525.00
						25	2*GM	UGLK1480	$725.00
					Yes	7	AF	UGLK1414	$525.00
						14	2*AF	UGLK1480	$725.00
							GK	UGLK1414	$525.00
						25	2*GK	UGLK1480	$725.00
VG2831 YN	3-way	6"	Flanged	Mixing	No	10	GM	UGLK1414	$525.00
						18	2*GM	UGLK1480	$725.00
					Yes	10	2*AF	UGLK1480	$725.00
							GK	UGLK1414	$525.00
						18	2*GK	UGLK1480	$725.00
V-5210-4595	2-way	2½"	Flanged	PDTC	No	38	AM	UGLK1412	$525.00
						75	GM	UGLK1412	$525.00
						134	2*GM	UGLK1478	$725.00
					Yes	38	AF	UGLK1412	$525.00
						75	2*AF	UGLK1478	$725.00
							GK	UGLK1412	$525.00
						134	2*GK	UGLK1478	$725.00
V-5210-4596	2-way	3"	Flanged	PDTC	No	26	AM	UGLK1412	$525.00
						52	GM	UGLK1412	$525.00
						93	2*GM	UGLK1478	$725.00
					Yes	26	AF	UGLK1412	$525.00
						52	2*AF	UGLK1478	$725.00
							GK	UGLK1412	$525.00
						93	2*GK	UGLK1478	$725.00

All close-off pressures listed are approximate and based on valve condition and application.

PDTO = Push down to open PDTC = Push down to close

067001 - 04/13 - Subject to change. © Belimo Aircontrols (USA), Inc.

Johnson Controls

V-52… Series Valves

Linkage/Actuator Selection Guide

Valve Body Model	Valve Configuration	Size	Body Type	Flow	Fail-Safe	Close-Off psi	Belimo Actuator Series	Belimo Linkage	Linkage List Price
V-5210-4597	2-way	4”	Flanged	PDTC	No	15	AM	UGLK1412	$525.00
						29	GM	UGLK1412	$525.00
						52	2*GM	UGLK1478	$725.00
					Yes	15	AF	UGLK1412	$525.00
						29	2*AF	UGLK1478	$725.00
							GK	UGLK1412	$525.00
						52	2*GK	UGLK1478	$725.00
V-5252-4	2-way	2½”	Flanged	PDTC	No	55	AM	UGLK1404	$525.00
						110	GM	UGLK1404	$525.00
						196	2*GM	UGLK1472	$725.00
					Yes	55	AF	UGLK1404	$525.00
						110	2*AF	UGLK1472	$725.00
							GK	UGLK1404	$525.00
						196	2*GK	UGLK1472	$725.00
V-5252-5	2-way	2½”	Flanged	PDTC	No	55	AM	UGLK1404	$525.00
						110	GM	UGLK1404	$525.00
						196	2*GM	UGLK1472	$725.00
					Yes	55	AF	UGLK1404	$525.00
						110	2*AF	UGLK1472	$725.00
							GK	UGLK1404	$525.00
						196	2*GK	UGLK1472	$725.00
V-5252-6	2-way	2½”	Flanged	PDTC	No	55	AM	UGLK1404	$525.00
						110	GM	UGLK1404	$525.00
						196	2*GM	UGLK1472	$725.00
					Yes	55	AF	UGLK1404	$525.00
						110	2*AF	UGLK1472	$725.00
							GK	UGLK1404	$525.00
						196	2*GK	UGLK1472	$725.00
V-5252-7	2-way	2½”	Flanged	PDTC	No	55	AM	UGLK1404	$525.00
						110	GM	UGLK1404	$525.00
						196	2*GM	UGLK1472	$725.00
					Yes	55	AF	UGLK1404	$525.00
						110	2*AF	UGLK1472	$725.00
							GK	UGLK1404	$525.00
						196	2*GK	UGLK1472	$725.00
V-5252-8	2-way	2½”	Flanged	PDTC	No	55	AM	UGLK1404	$525.00
						110	GM	UGLK1404	$525.00
						196	2*GM	UGLK1472	$725.00
					Yes	55	AF	UGLK1404	$525.00
						110	2*AF	UGLK1472	$725.00
							GK	UGLK1404	$525.00
						196	2*GK	UGLK1472	$725.00
V-5252-32	2-way	2½”	Flanged	PDTC	No	55	AM	UGLK1404	$525.00
						110	GM	UGLK1404	$525.00
						196	2*GM	UGLK1472	$725.00
					Yes	55	AF	UGLK1404	$525.00
						110	2*AF	UGLK1472	$725.00
							GK	UGLK1404	$525.00
						196	2*GK	UGLK1472	$725.00
V-5252-33	2-way	2½”	Flanged	PDTC	No	55	AM	UGLK1404	$525.00
						110	GM	UGLK1404	$525.00
						196	2*GM	UGLK1472	$725.00
					Yes	55	AF	UGLK1404	$525.00
						110	2*AF	UGLK1472	$725.00
							GK	UGLK1404	$525.00
						196	2*GK	UGLK1472	$725.00
V-5252-9	2-way	3”	Flanged	PDTC	No	38	AM	UGLK1404	$525.00
						77	GM	UGLK1404	$525.00
						136	2*GM	UGLK1472	$725.00
V-5252-9	2-way	3”	Flanged	PDTC	Yes	38	AF	UGLK1404	$525.00
						77	2*AF	UGLK1472	$725.00
							GK	UGLK1404	$525.00
						136	2*GK	UGLK1472	$725.00
V-5252-10	2-way	3”	Flanged	PDTC	No	38	AM	UGLK1404	$525.00
						77	GM	UGLK1404	$525.00
						136	2*GM	UGLK1472	$725.00

All close-off pressures listed are approximate and based on valve condition and application.

PDTO = Push down to open PDTC = Push down to close

067001- 04/13 - Subject to change. © Belimo Aircontrols (USA), Inc.

Valve Body Model	Valve Configuration	Size	Body Type	Flow	Fail-Safe	Close-Off psi	Belimo Actuator Series	Belimo Linkage	Linkage List Price
V-5252-10	2-way	3"	Flanged	PDTC	Yes	38	AF	UGLK1404	$525.00
						77	2*AF	UGLK1472	$725.00
							GK	UGLK1404	$525.00
						136	2*GK	UGLK1472	$725.00
V-5252-11	2-way	3"	Flanged	PDTC	No	38	AM	UGLK1404	$525.00
						77	GM	UGLK1404	$525.00
						136	2*GM	UGLK1472	$725.00
					Yes	38	AF	UGLK1404	$525.00
						77	2*AF	UGLK1472	$725.00
							GK	UGLK1404	$525.00
						136	2*GK	UGLK1472	$725.00
V-5252-34	2-way	3"	Flanged	PDTC	No	38	AM	UGLK1404	$525.00
						77	GM	UGLK1404	$525.00
						136	2*GM	UGLK1472	$725.00
					Yes	38	AF	UGLK1404	$525.00
						77	2*AF	UGLK1472	$725.00
							GK	UGLK1404	$525.00
						136	2*GK	UGLK1472	$725.00
V-5252-15	2-way	4"	Flanged	PDTC	No	15	AM	UGLK1412	$525.00
						29	GM	UGLK1412	$525.00
						52	2*GM	UGLK1478	$725.00
					Yes	15	AF	UGLK1412	$525.00
						29	2*AF	UGLK1478	$725.00
							GK	UGLK1412	$525.00
						52	2*GK	UGLK1478	$725.00
V-5252-16	2-way	4"	Flanged	PDTC	No	15	AM	UGLK1412	$525.00
						29	GM	UGLK1412	$525.00
						52	2*GM	UGLK1478	$725.00
					Yes	15	AF	UGLK1412	$525.00
						29	2*AF	UGLK1478	$725.00
							GK	UGLK1412	$525.00
						52	2*GK	UGLK1478	$725.00
V-5252-37	2-way	4"	Flanged	PDTC	No	15	AM	UGLK1412	$525.00
						29	GM	UGLK1412	$525.00
						52	2*GM	UGLK1478	$725.00
					Yes	15	AF	UGLK1412	$525.00
						29	2*AF	UGLK1478	$725.00
							GK	UGLK1412	$525.00
						52	2*GK	UGLK1478	$725.00
V-5410-4595	2-way	2½"	Flanged	PDTO	No	38	AM	UGLK1412	$525.00
						75	GM	UGLK1412	$525.00
						134	2*GM	UGLK1478	$725.00
					Yes	38	AF	UGLK1412	$525.00
						75	2*AF	UGLK1478	$725.00
							GK	UGLK1412	$525.00
						134	2*GK	UGLK1478	$725.00
V-5410-4596	2-way	3"	Flanged	PDTO	No	26	AM	UGLK1412	$525.00
						52	GM	UGLK1412	$525.00
						93	2*GM	UGLK1478	$725.00
					Yes	26	AF	UGLK1412	$525.00
						52	2*AF	UGLK1478	$725.00
							GK	UGLK1412	$525.00
						93	2*GK	UGLK1478	$725.00
V-5410-4597	2-way	4"	Flanged	PDTO	No	15	AM	UGLK1412	$525.00
						29	GM	UGLK1412	$525.00
						52	2*GM	UGLK1478	$725.00
V-5410-4597	2-way	4"	Flanged	PDTO	Yes	15	AF	UGLK1412	$525.00
						29	2*AF	UGLK1478	$725.00
							GK	UGLK1412	$525.00
						52	2*GK	UGLK1478	$725.00
V-5462-6	2-way	2½"	Flanged	PDTO	No	55	AM	UGLK1404	$525.00
						110	GM	UGLK1404	$525.00
						196	2*GM	UGLK1472	$725.00
					Yes	55	AF	UGLK1404	$525.00
						110	2*AF	UGLK1472	$725.00
							GK	UGLK1404	$525.00
						196	2*GK	UGLK1472	$725.00

All close-off pressures listed are approximate and based on valve condition and application. PDTO = Push down to open PDTC = Push down to close

067001 - 04/13 - Subject to change. © Belimo Aircontrols (USA), Inc.

Johnson Controls

V-54…, V-58… Series Valves

Linkage/Actuator Selection Guide

Valve Body Model	Valve Configuration	Size	Body Type	Flow	Fail-Safe	Close-Off psi	Belimo Actuator Series	Belimo Linkage	Linkage List Price
V-5462-7	2-way	2½"	Flanged	PDTO	No	55	AM	UGLK1404	$525.00
						110	GM	UGLK1404	$525.00
						196	2*GM	UGLK1472	$725.00
					Yes	55	AF	UGLK1404	$525.00
						110	2*AF	UGLK1472	$725.00
							GK	UGLK1404	$525.00
						196	2*GK	UGLK1472	$725.00
V-5462-34	2-way	2½"	Flanged	PDTO	No	55	AM	UGLK1404	$525.00
						110	GM	UGLK1404	$525.00
						196	2*GM	UGLK1472	$725.00
					Yes	55	AF	UGLK1404	$525.00
						110	2*AF	UGLK1472	$725.00
							GK	UGLK1404	$525.00
						196	2*GK	UGLK1472	$725.00
V-5462-10	2-way	3"	Flanged	PDTC	No	26	AM	UGLK1412	$525.00
						52	GM	UGLK1412	$525.00
						93	2*GM	UGLK1478	$725.00
					Yes	26	AF	UGLK1412	$525.00
						52	2*AF	UGLK1478	$725.00
							GK	UGLK1412	$525.00
						93	2*GK	UGLK1478	$725.00
V-5462-36	2-way	3"	Flanged	PDTC	No	26	AM	UGLK1412	$525.00
						52	GM	UGLK1412	$525.00
						93	2*GM	UGLK1478	$725.00
					Yes	26	AF	UGLK1412	$525.00
						52	2*AF	UGLK1478	$725.00
							GK	UGLK1412	$525.00
						93	2*GK	UGLK1478	$725.00
V-5462-13	2-way	4"	Flanged	PDTO	No	15	AM	UGLK1412	$525.00
						29	GM	UGLK1412	$525.00
						52	2*GM	UGLK1478	$725.00
					Yes	15	AF	UGLK1412	$525.00
						29	2*AF	UGLK1478	$725.00
							GK	UGLK1412	$525.00
						52	2*GK	UGLK1478	$725.00
V-5462-14	2-way	4"	Flanged	PDTO	No	15	AM	UGLK1412	$525.00
						29	GM	UGLK1412	$525.00
						52	2*GM	UGLK1478	$725.00
					Yes	15	AF	UGLK1412	$525.00
						29	2*AF	UGLK1478	$725.00
							GK	UGLK1412	$525.00
						52	2*GK	UGLK1478	$725.00
V-5462-38	2-way	4"	Flanged	PDTO	No	15	AM	UGLK1412	$525.00
						29	GM	UGLK1412	$525.00
						52	2*GM	UGLK1478	$725.00
					Yes	15	AF	UGLK1412	$525.00
						29	2*AF	UGLK1478	$725.00
							GK	UGLK1412	$525.00
						52	2*GK	UGLK1478	$725.00
V-5842-7	3-way	2½"	Flanged	Mixing	No	55	AM	UGLK1404	$525.00
						110	GM	UGLK1404	$525.00
						196	2*GM	UGLK1472	$725.00
					Yes	55	AF	UGLK1404	$525.00
						110	2*AF	UGLK1472	$725.00
							GK	UGLK1404	$525.00
						196	2*GK	UGLK1472	$725.00
V-5842-8	3-way	2½"	Flanged	Mixing	No	55	AM	UGLK1404	$525.00
						110	GM	UGLK1404	$525.00
						196	2*GM	UGLK1472	$725.00
					Yes	55	AF	UGLK1404	$525.00
						110	2*AF	UGLK1472	$725.00
							GK	UGLK1404	$525.00
						196	2*GK	UGLK1472	$725.00
V-5842-31	3-way	2½"	Flanged	Mixing	No	55	AM	UGLK1404	$525.00
						110	GM	UGLK1404	$525.00
						196	2*GM	UGLK1472	$725.00

All close-off pressures listed are approximate and based on valve condition and application.

PDTO = Push down to open PDTC = Push down to close

067001- 04/13 - Subject to change. © Belimo Aircontrols (USA), Inc.

Valve Body Model	Valve Configuration	Size	Body Type	Flow	Fail-Safe	Close-Off psi	Belimo Actuator Series	Belimo Linkage	Linkage List Price
V-5842-31	3-way	2½"	Flanged	Mixing	Yes	55	AF	UGLK1404	$525.00
						110	2*AF	UGLK1472	$725.00
							GK	UGLK1404	$525.00
						196	2*GK	UGLK1472	$725.00
V-5842-17	3-way	3"	Flanged	Mixing	No	26	AM	UGLK1412	$525.00
						52	GM	UGLK1412	$525.00
						93	2*GM	UGLK1478	$725.00
					Yes	26	AF	UGLK1412	$525.00
						52	2*AF	UGLK1478	$725.00
							GK	UGLK1412	$525.00
						93	2*GK	UGLK1478	$725.00
V-5842-18	3-way	3"	Flanged	Mixing	No	26	AM	UGLK1412	$525.00
						52	GM	UGLK1412	$525.00
						93	2*GM	UGLK1478	$725.00
					Yes	26	AF	UGLK1412	$525.00
						52	2*AF	UGLK1478	$725.00
							GK	UGLK1412	$525.00
						93	2*GK	UGLK1478	$725.00
V-5842-33	3-way	3"	Flanged	Mixing	No	26	AM	UGLK1412	$525.00
						52	GM	UGLK1412	$525.00
						93	2*GM	UGLK1478	$725.00
					Yes	26	AF	UGLK1412	$525.00
						52	2*AF	UGLK1478	$725.00
							GK	UGLK1412	$525.00
						93	2*GK	UGLK1478	$725.00
V-5842-11	3-way	4"	Flanged	Mixing	No	15	AM	UGLK1412	$525.00
						29	GM	UGLK1412	$525.00
						52	2*GM	UGLK1478	$725.00
					Yes	15	AF	UGLK1412	$525.00
						29	2*AF	UGLK1478	$725.00
							GK	UGLK1412	$525.00
						52	2*GK	UGLK1478	$725.00
V-5842-12	3-way	4"	Flanged	Mixing	No	15	AM	UGLK1412	$525.00
						29	GM	UGLK1412	$525.00
						52	2*GM	UGLK1478	$725.00
					Yes	15	AF	UGLK1412	$525.00
						29	2*AF	UGLK1478	$725.00
							GK	UGLK1412	$525.00
						52	2*GK	UGLK1478	$725.00
V-5842-34	3-way	4"	Flanged	Mixing	No	15	AM	UGLK1412	$525.00
						29	GM	UGLK1412	$525.00
						52	2*GM	UGLK1478	$725.00
					Yes	15	AF	UGLK1412	$525.00
						29	2*AF	UGLK1478	$725.00
							GK	UGLK1412	$525.00
						52	2*GK	UGLK1478	$725.00
VB-3752-19	2-way	2½"	Flanged	PDTC	No	55	AM	UGLK1404	$525.00
						110	GM	UGLK1404	$525.00
						196	2*GM	UGLK1472	$725.00
					Yes	55	AF	UGLK1404	$525.00
						110	2*AF	UGLK1472	$725.00
							GK	UGLK1404	$525.00
						196	2*GK	UGLK1472	$725.00
VB-3970-11	2-way	2½"	Flanged	PDTO	No	55	AM	UGLK1404	$525.00
						110	GM	UGLK1404	$525.00
						196	2*GM	UGLK1472	$725.00
					Yes	55	AF	UGLK1404	$525.00
						110	2*AF	UGLK1472	$725.00
							GK	UGLK1404	$525.00
						196	2*GK	UGLK1472	$725.00
VB-4322-9	3-way	2½"	Flanged	Mixing	No	55	AM	UGLK1404	$525.00
						110	GM	UGLK1404	$525.00
						196	2*GM	UGLK1472	$725.00
					Yes	55	AF	UGLK1404	$525.00
						110	2*AF	UGLK1472	$725.00
							GK	UGLK1404	$525.00
						196	2*GK	UGLK1472	$725.00

All close-off pressures listed are approximate and based on valve condition and application. PDTO = Push down to open PDTC = Push down to close

067001 - 04/13 - Subject to change. © Belimo Aircontrols (USA), Inc.

Johnson Controls

VG2…, V(B)-37… Series Valves

Linkage/Actuator Selection Guide

5 YEAR WARRANTY

Valve Body Model	Valve Configuration	Size	Body Type	Flow	Fail-Safe	Close-Off psi	Belimo Actuator Series	Belimo Linkage	Linkage List Price
VG2231 TM	2-way	2½"	Flanged	PDTC	No	55	AM	UGLK1404	$525.00
						110	GM	UGLK1404	$525.00
						196	2*GM	UGLK1472	$725.00
					Yes	55	AF	UGLK1404	$525.00
						110	2*AF	UGLK1472	$725.00
							GK	UGLK1404	$525.00
						196	2*GK	UGLK1472	$725.00
VG2231 UN	2-way	3"	Flanged	PDTC	No	26	AM	UGLK1412	$525.00
						52	GM	UGLK1412	$525.00
						93	2*GM	UGLK1478	$725.00
					Yes	26	AF	UGLK1412	$525.00
						52	2*AF	UGLK1478	$725.00
							GK	UGLK1412	$525.00
						93	2*GK	UGLK1478	$725.00
VG2231 VN	2-way	4"	Flanged	PDTC	No	15	AM	UGLK1412	$525.00
						29	GM	UGLK1412	$525.00
						52	2*GM	UGLK1478	$725.00
					Yes	15	AF	UGLK1412	$525.00
						29	2*AF	UGLK1478	$725.00
							GK	UGLK1412	$525.00
						52	2*GK	UGLK1478	$725.00
VG2431 TM	2-way	2½"	Flanged	PDTO	No	55	AM	UGLK1404	$525.00
						110	GM	UGLK1404	$525.00
						196	2*GM	UGLK1472	$725.00
					Yes	55	AF	UGLK1404	$525.00
						110	2*AF	UGLK1472	$725.00
							GK	UGLK1404	$525.00
						196	2*GK	UGLK1472	$725.00
VG2431 UN	2-way	3"	Flanged	PDTO	No	26	AM	UGLK1412	$525.00
						52	GM	UGLK1412	$525.00
						93	2*GM	UGLK1478	$725.00
					Yes	26	AF	UGLK1412	$525.00
						52	2*AF	UGLK1478	$725.00
							GK	UGLK1412	$525.00
						93	2*GK	UGLK1478	$725.00
VG2431 VN	2-way	4"	Flanged	PDTO	No	15	AM	UGLK1412	$525.00
						29	GM	UGLK1412	$525.00
						52	2*GM	UGLK1478	$725.00
					Yes	15	AF	UGLK1412	$525.00
						29	2*AF	UGLK1478	$725.00
							GK	UGLK1412	$525.00
						52	2*GK	UGLK1478	$725.00
VG2831 TM	3-way	2½"	Flanged	Mixing	No	55	AM	UGLK1404	$525.00
						110	GM	UGLK1404	$525.00
						196	2*GM	UGLK1472	$725.00
					Yes	55	AF	UGLK1404	$525.00
						110	2*AF	UGLK1472	$725.00
							GK	UGLK1404	$525.00
						196	2*GK	UGLK1472	$725.00
VG2831 UN	3-way	3"	Flanged	Mixing	No	26	AM	UGLK1412	$525.00
						52	GM	UGLK1412	$525.00
						93	2*GM	UGLK1478	$725.00
					Yes	26	AF	UGLK1412	$525.00
						52	2*AF	UGLK1478	$725.00
							GK	UGLK1412	$525.00
						93	2*GK	UGLK1478	$725.00
VG2831 VN	3-way	4"	Flanged	Mixing	No	15	AM	UGLK1412	$525.00
						29	GM	UGLK1412	$525.00
						52	2*GM	UGLK1478	$725.00
					Yes	15	AF	UGLK1412	$525.00
						29	2*AF	UGLK1478	$725.00
							GK	UGLK1412	$525.00
						52	2*GK	UGLK1478	$725.00
V(B)-3754 Series, Bronze Trim	2-way	¾"	NPT	-	No	211	LV	UGVL	PG # 18-11
					Yes	211	LVK	UGVL	PG # 18-11
		1"	NPT	-	No	92	LV	UGVL	PG # 18-11
						250	SV	UGVL	PG # 18-10

All close-off pressures listed are approximate and based on valve condition and application. PDTO = Push down to open PDTC = Push down to close

O67001- 04/13 - Subject to change. © Belimo Aircontrols (USA), Inc.

Valve Body Model	Valve Configuration	Size	Body Type	Flow	Fail-Safe	Close-Off psi	Belimo Actuator Series	Belimo Linkage	Linkage List Price
V(B)-3754 Series, Bronze Trim	2-way	1"	NPT	-	Yes	92	LVK	UGVL	PG # 18-11
						250	SVK	UGVL	PG # 18-11
		1¼"	NPT	-	No	236	SV	UGVL	PG # 18-10
					Yes	236	SVK	UGVL	PG # 18-11
		1½"	NPT	-	No	160	SV	UGVL	PG # 18-10
					Yes	160	SVK	UGVL	PG # 18-11
		2"	NPT	-	No	85	SV	UGVL	PG # 18-10
					Yes	85	SVK	UGVL	PG # 18-11
V(B)-3974 Series, Bronze Trim	2-way	¾"	NPT	-	No	211	LV	UGVL	PG # 18-11
					Yes	211	LVK	UGVL	PG # 18-11
		1"	NPT	-	No	92	LV	UGVL	PG # 18-11
						250	SV	UGVL	PG # 18-10
					Yes	92	LVK	UGVL	PG # 18-11
						250	SVK	UGVL	PG # 18-11
		1¼"	NPT	-	No	236	SV	UGVL	PG # 18-10
					Yes	236	SVK	UGVL	PG # 18-11
		1½"	NPT	-	No	160	SV	UGVL	PG # 18-10
					Yes	160	SVK	UGVL	PG # 18-11
		2"	NPT	-	No	85	SV	UGVL	PG # 18-10
					Yes	85	SVK	UGVL	PG # 18-11
V(B)-4324 Series, Bronze Trim	3-way	¾"	NPT	-	No	211	LV	UGVL	PG # 18-11
					Yes	211	LVK	UGVL	PG # 18-11
		1"	NPT	-	No	92	LV	UGVL	PG # 18-11
						250	SV	UGVL	PG # 18-10
					Yes	92	LVK	UGVL	PG # 18-11
						250	SVK	UGVL	PG # 18-11
		1¼"	NPT	-	No	236	SV	UGVL	PG # 18-10
					Yes	236	SVK	UGVL	PG # 18-11
		1½"	NPT	-	No	160	SV	UGVL	PG # 18-10
					Yes	160	SVK	UGVL	PG # 18-11
		2"	NPT	-	No	85	SV	UGVL	PG # 18-10
					Yes	85	SVK	UGVL	PG # 18-11
V(B)-5844 Series	2-way	¾"	NPT	-	No	211	LV	UGVL	PG # 18-11
					Yes	211	LVK	UGVL	PG # 18-11
		1"	NPT	-	No	92	LV	UGVL	PG # 18-11
						250	SV	UGVL	PG # 18-10
					Yes	92	LVK	UGVL	PG # 18-11
						250	SVK	UGVL	PG # 18-11
		1¼"	NPT	-	No	236	SV	UGVL	PG # 18-10
					Yes	236	SVK	UGVL	PG # 18-11
		1½"	NPT	-	No	160	SV	UGVL	PG # 18-10
					Yes	160	SVK	UGVL	PG # 18-11
		2"	NPT	-	No	85	SV	UGVL	PG # 18-10
					Yes	85	SVK	UGVL	PG # 18-11
	3-way	¾"	NPT	-	No	211	LV	UGVL	PG # 18-11
					Yes	211	LVK	UGVL	PG # 18-11
		1"	NPT	-	No	92	LV	UGVL	PG # 18-11
						250	SV	UGVL	PG # 18-10
					Yes	92	LVK	UGVL	PG # 18-11
						250	SVK	UGVL	PG # 18-11
		1¼"	NPT	-	No	236	SV	UGVL	PG # 18-10
					Yes	236	SVK	UGVL	PG # 18-11
		1½"	NPT	-	No	160	SV	UGVL	PG # 18-10
					Yes	160	SVK	UGVL	PG # 18-11
		2"	NPT	-	No	85	SV	UGVL	PG # 18-10
					Yes	85	SVK	UGVL	PG # 18-11
V-4332	3-way	¾"	NPT	-	No	211	LV	UGVL	PG # 18-11
					Yes	211	LVK	UGVL	PG # 18-11
		1"	NPT	-	No	92	LV	UGVL	PG # 18-11
						250	SV	UGVL	PG # 18-10
					Yes	92	LVK	UGVL	PG # 18-11
						250	SVK	UGVL	PG # 18-11
		1¼"	NPT	-	No	236	SV	UGVL	PG # 18-10
					Yes	236	SVK	UGVL	PG # 18-11
		1½"	NPT	-	No	160	SV	UGVL	PG # 18-10
					Yes	160	SVK	UGVL	PG # 18-11

All close-off pressures listed are approximate and based on valve condition and application.

067001 - 04/13 - Subject to change. © Belimo Aircontrols (USA), Inc.

Johnson Controls

V-43…, VG7000, V-37…, V-38…, V-39… Series Valves

Linkage/Actuator Selection Guide

5 YEAR WARRANTY

Valve Body Model	Valve Configuration	Size	Body Type	Flow	Fail-Safe	Close-Off psi	Belimo Actuator Series	Belimo Linkage	Linkage List Price
V-4332	3-way	2”	NPT	-	No	85	SV	UGVL	PG # 18-10
					Yes	85	SVK	UGVL	PG # 18-11
VG7000 Series	2-way	½”	NPT	-	No	250	LV	UGVL	PG # 18-11
							NVG	UGVL	PG # 18-10
					Yes	250	LVK	UGVL	PG # 18-11
		¾”	NPT	-	No	211	LV	UGVL	PG # 18-11
					Yes	211	LVK	UGVL	PG # 18-11
		1”	NPT	-	No	92	LV	UGVL	PG # 18-11
						250	SV	UGVL	PG # 18-10
					Yes	92	LVK	UGVL	PG # 18-11
						250	SVK	UGVL	PG # 18-11
		1¼”	NPT	-	No	236	SV	UGVL	PG # 18-10
					Yes	236	SVK	UGVL	PG # 18-11
		1½”	NPT	-	No	160	SV	UGVL	PG # 18-10
					Yes	160	SVK	UGVL	PG # 18-11
		2”	NPT	-	No	85	SV	UGVL	PG # 18-10
					Yes	85	SVK	UGVL	PG # 18-11
	3-way	½”	NPT	-	No	250	LV	UGVL	PG # 18-11
							NVG	UGVL	PG # 18-10
					Yes	250	LVK	UGVL	PG # 18-11
		¾”	NPT	-	No	211	LV	UGVL	PG # 18-11
					Yes	211	LVK	UGVL	PG # 18-11
		1”	NPT	-	No	92	LV	UGVL	PG # 18-11
						250	SV	UGVL	PG # 18-10
					Yes	92	LVK	UGVL	PG # 18-11
						250	SVK	UGVL	PG # 18-11
		1¼”	NPT	-	No	236	SV	UGVL	PG # 18-10
					Yes	236	SVK	UGVL	PG # 18-11
		1½”	NPT	-	No	160	SV	UGVL	PG # 18-10
					Yes	160	SVK	UGVL	PG # 18-11
		2”	NPT	-	No	85	SV	UGVL	PG # 18-10
					Yes	85	SVK	UGVL	PG # 18-11
V-3754-(4, 1008, 1022, 1026)	2-way	¾”	NPT	PDTC	No	215	LM	UGLK1550	$368.00
						250	NM	UGLK1550	$368.00
					Yes	215	LF	UGLK1550	$368.00
						250	NF	UGLK1400	$525.00
V-3754-(5, 1010, 1023, 1027)	2-way	1”	NPT	PDTC	No	250	AM	UGLK1402	$525.00
					Yes	173	NF	UGLK1402	$525.00
						250	AF	UGLK1402	$525.00
V-3754-8	2-way	1¼”	NPT	PDTC	No	221	AM	UGLK1402	$525.00
					Yes	110	NF	UGLK1402	$525.00
						221	AF	UGLK1402	$525.00
V-3754-(6, 1028, 1029, 1030)	2-way	1½”	NPT	PDTC	No	153	AM	UGLK1402	$525.00
						250	GM	UGLK1402	$525.00
					Yes	77	NF	UGLK1402	$525.00
						153	AF	UGLK1402	$525.00
						209	2*AF	UGLK1478	$725.00
						250	GK	UGLK1402	$525.00
V-3754-7	2-way	2”	NPT	PDTC	No	86	AM	UGLK1406	$525.00
						173	GM	UGLK1406	$525.00
						250	2*GM	UGLK1474	$725.00
					Yes	43	NF	UGLK1406	$525.00
						86	AF	UGLK1406	$525.00
						173	2*AF	UGLK1474	$725.00
							GK	UGLK1406	$525.00
						250	2*GK	UGLK1474	$725.00
V-3766	2-way	½”	FLARE	PDTC	No	250	LM	UGLK1552	$368.00
					Yes	250	LF	UGLK1552	$368.00
V-3854-5	2-way	½”	NPT	PDTC	No	250	LM	UGLK1554	$368.00
					Yes	250	LF	UGLK1554	$368.00
V-3966	2-way	½”	FLARE	PDTO	No	250	LM	UGLK1552	$368.00
					Yes	250	LF	UGLK1552	$368.00
V-3974-(4, 1004, 1010)	2-way	¾”	NPT	PDTO	No	215	LM	UGLK1550	$368.00
						250	NM	UGLK1550	$368.00
					Yes	215	LF	UGLK1550	$368.00
						250	NF	UGLK1400	$525.00

All close-off pressures listed are approximate and based on valve condition and application.

PDTO = Push down to open PDTC = Push down to close

RETROFIT SOLUTIONS

067001- 04/13 - Subject to change. © Belimo Aircontrols (USA), Inc.

Valve Body Model	Valve Configuration	Size	Body Type	Flow	Fail-Safe	Close-Off psi	Belimo Actuator Series	Belimo Linkage	Linkage List Price
V-3974-(5, 1005, 1011)	2-way	1"	NPT	PDTO	No	250	AM	UGLK1402	$525.00
					Yes	173	NF	UGLK1402	$525.00
						250	AF	UGLK1402	$525.00
V-3974-(6, 1012, 1013)	2-way	1½"	NPT	PDTO	No	153	AM	UGLK1402	$525.00
						250	GM	UGLK1402	$525.00
					Yes	77	NF	UGLK1402	$525.00
						153	AF	UGLK1402	$525.00
						209	2*AF	UGLK1478	$725.00
						250	GK	UGLK1402	$525.00
V-3974-7	2-way	2"	NPT	PDTO	No	86	AM	UGLK1406	$525.00
						173	GM	UGLK1406	$525.00
						250	2*GM	UGLK1474	$725.00
					Yes	43	NF	UGLK1406	$525.00
						86	AF	UGLK1406	$525.00
						173	2*AF	UGLK1474	$725.00
							GK	UGLK1406	$525.00
						250	2*GK	UGLK1474	$725.00
V-4324-(4, 1005, 1006, 1013)	3-way	¾"	NPT	Mixing	No	215	LM	UGLK1550	$368.00
						250	NM	UGLK1550	$368.00
					Yes	215	LF	UGLK1550	$368.00
						250	NF	UGLK1400	$525.00
V-4324-(5, 1007, 1008, 1014)	3-way	1"	NPT	Mixing	No	250	AM	UGLK1402	$525.00
					Yes	173	NF	UGLK1402	$525.00
						250	AF	UGLK1402	$525.00
V-4324-8	3-way	1¼"	NPT	Mixing	No	221	AM	UGLK1402	$525.00
					Yes	110	NF	UGLK1402	$525.00
						221	AF	UGLK1402	$525.00
V-4324-(6,1015, 1016, 1017)	3-way	1½"	NPT	Mixing	No	153	AM	UGLK1402	$525.00
						250	GM	UGLK1402	$525.00
					Yes	77	NF	UGLK1402	$525.00
						153	AF	UGLK1402	$525.00
						209	2*AF	UGLK1478	$725.00
						250	GK	UGLK1402	$525.00
V-4324-7	3-way	2"	NPT	Mixing	No	86	AM	UGLK1406	$525.00
						173	GM	UGLK1406	$525.00
						250	2*GM	UGLK1474	$725.00
					Yes	43	NF	UGLK1406	$525.00
						86	AF	UGLK1406	$525.00
						173	2*AF	UGLK1474	$725.00
							GK	UGLK1406	$525.00
						250	2*GK	UGLK1474	$725.00
V-4332	3-way	½"	FLARE	PDTC	No	250	LM	UGLK1552	$368.00
					Yes	250	LF	UGLK1552	$368.00
V-5254-(1, 2, 3, 11)	2-way	1½"	NPT	PDTC	No	153	AM	UGLK1404	$525.00
						250	2*GM	UGLK1472	$725.00
							GM	UGLK1404	$525.00
					Yes	77	NF	UGLK1404	$525.00
						153	AF	UGLK1404	$525.00
						250	2*GK	UGLK1472	$725.00
							GK	UGLK1404	$525.00
						307	2*AF	UGLK1472	$725.00
V-5254-(4, 5, 6, 12)	2-way	2"	NPT	PDTC	No	86	AM	UGLK1406	$525.00
						173	GM	UGLK1406	$525.00
						250	2*GM	UGLK1474	$725.00
V-5254-(4, 5, 6, 12)	2-way	2"	NPT	PDTC	Yes	43	NF	UGLK1406	$525.00
						86	AF	UGLK1406	$525.00
						173	2*AF	UGLK1474	$725.00
							GK	UGLK1406	$525.00
						250	2*GK	UGLK1474	$725.00
V-5464-(1, 2, 11)	2-way	1½"	NPT	PDTO	No	153	AM	UGLK1404	$525.00
						250	2*GM	UGLK1472	$725.00
							GM	UGLK1404	$525.00

All close-off pressures listed are approximate and based on valve condition and application.

PDTO = Push down to open PDTC = Push down to close

067001 - 04/13 - Subject to change. © Belimo Aircontrols (USA), Inc.

Johnson Controls

V-54…, V-58…, VG7… Series Valves

Linkage/Actuator Selection Guide

Valve Body Model	Valve Configuration	Size	Body Type	Flow	Fail-Safe	Close-Off psi	Belimo Actuator Series	Belimo Linkage	Linkage List Price
V-5464-(1, 2, 11)	2-way	1½"	NPT	PDTO	Yes	77	NF	UGLK1404	$525.00
						153	AF	UGLK1404	$525.00
						250	2*GK	UGLK1472	$725.00
							GK	UGLK1404	$525.00
						307	2*AF	UGLK1472	$725.00
V-5464-(3, 4, 12)	2-way	2"	NPT	PDTO	No	86	AM	UGLK1406	$525.00
						173	GM	UGLK1406	$525.00
						250	2*GM	UGLK1474	$725.00
					Yes	43	NF	UGLK1406	$525.00
						86	AF	UGLK1406	$525.00
						173	2*AF	UGLK1474	$725.00
							GK	UGLK1406	$525.00
						250	2*GK	UGLK1474	$725.00
V-5844-(1, 2, 3, 11)	3-way	1½"	NPT	Mixing	No	153	AM	UGLK1404	$525.00
						250	2*GM	UGLK1472	$725.00
							GM	UGLK1404	$525.00
					Yes	77	NF	UGLK1404	$525.00
						153	AF	UGLK1404	$525.00
						250	2*GK	UGLK1472	$725.00
							GK	UGLK1404	$525.00
						307	2*AF	UGLK1472	$725.00
V-5844-(4, 5, 6, 12)	3-way	2"	NPT	Mixing	No	86	AM	UGLK1406	$525.00
						173	GM	UGLK1406	$525.00
						250	2*GM	UGLK1474	$725.00
					Yes	43	NF	UGLK1406	$525.00
						86	AF	UGLK1406	$525.00
						173	2*AF	UGLK1474	$725.00
							GK	UGLK1406	$525.00
						250	2*GK	UGLK1474	$725.00
VG7XXX-(C, E, GT) *Threaded Stem Only	2-way	½"	NPT	-	No	250	LM	UGLK1416	$475.00
					Yes	250	LF	UGLK1416	$475.00
	3-way	½"	NPT	-	No	250	LM	UGLK1416	$475.00
					Yes	250	LF	UGLK1416	$475.00
VG7XXX-LT *Threaded Stem Only	2-way	¾"	NPT	-	No	217	LM	UGLK1416	$475.00
						250	NM	UGLK1416	$475.00
					Yes	169	LF	UGLK1416	$475.00
	3-way	¾"	NPT	-	No	217	LM	UGLK1416	$475.00
						250	NM	UGLK1416	$475.00
					Yes	169	LF	UGLK1416	$475.00
VG7XXX-NT *Threaded Stem Only	2-way	1"	NPT	-	No	122	LM	UGLK1418	$475.00
						244	NM	UGLK1418	$475.00
					Yes	95	LF	UGLK1418	$475.00
	3-way	1"	NPT	-	No	122	LM	UGLK1418	$475.00
						244	NM	UGLK1418	$475.00
					Yes	95	LF	UGLK1418	$475.00
VG7XXX-PT *Threaded Stem Only	2-way	1¼"	NPT	-	No	78	LM	UGLK1418	$475.00
						156	NM	UGLK1418	$475.00
					Yes	61	LF	UGLK1418	$475.00
	3-way	1¼"	NPT	-	No	78	LM	UGLK1418	$475.00
						156	NM	UGLK1418	$475.00
					Yes	61	LF	UGLK1418	$475.00
VG7XXX-RT *Threaded Stem Only	2-way	1½"	NPT	-	No	38	LM	UGLK1420	$475.00
						77	NM	UGLK1420	$475.00
						153	AM	UGLK1422	$525.00
						250	GM	UGLK1422	$525.00
					Yes	77	NF	UGLK1422	$525.00
						30	LF	UGLK1420	$475.00
						250	GK	UGLK1422	$525.00
	3-way	1½"	NPT	-	No	38	LM	UGLK1420	$475.00
						77	NM	UGLK1420	$475.00
						153	AM	UGLK1422	$525.00
						250	GM	UGLK1422	$525.00
					Yes	77	NF	UGLK1422	$525.00
						30	LF	UGLK1420	$475.00
						153	AF	UGLK1422	$525.00
						250	GK	UGLK1422	$525.00

All close-off pressures listed are approximate and based on valve condition and application.

PDTO = Push down to open PDTC = Push down to close

067001- 04/13 - Subject to change. © Belimo Aircontrols (USA), Inc.

Valve Body Model	Valve Configuration	Size	Body Type	Flow	Fail-Safe	Close-Off psi	Belimo Actuator Series	Belimo Linkage	Linkage List Price
VG7XXX-ST *Threaded Stem Only	2-way	2"	NPT	-	No	22	LM	UGLK1420	$475.00
						43	NM	UGLK1420	$475.00
						86	AM	UGLK1422	$525.00
						173	GM	UGLK1422	$525.00
					Yes	17	LF	UGLK1420	$475.00
						43	NF	UGLK1422	$525.00
						86	AF	UGLK1422	$525.00
						153	AF	UGLK1422	$525.00
						173	GK	UGLK1422	$525.00
	3-way	2"	NPT	-	No	22	LM	UGLK1420	$475.00
						43	NM	UGLK1420	$475.00
						86	AM	UGLK1422	$525.00
						173	GM	UGLK1422	$525.00
					Yes	17	LF	UGLK1420	$475.00
						43	NF	UGLK1422	$525.00
						86	AF	UGLK1422	$525.00
						173	GK	UGLK1422	$525.00
VTM-TN-(007, 019, 047)* Threaded Stem Only	2-way	½"	FLARE	-	No	250	LM	UGLK1550	$368.00
					Yes	250	LF	UGLK1550	$368.00
	3-way	½"	NPT	-	No	250	LM	UGLK1550	$368.00
					Yes	250	LF	UGLK1550	$368.00
ROBERTSHAW									
V6700	2-way	½"	NPT	-	No	250	LV	UGVL	PG # 18-11
					Yes	250	LVK	UGVL	PG # 18-11
		¾"	NPT	-	No	211	LV	UGVL	PG # 18-11
					Yes	211	LVK	UGVL	PG # 18-11
		1"	NPT	-	No	92	LV	UGVL	PG # 18-11
						250	SV	UGVL	PG # 18-10
					Yes	92	LVK	UGVL	PG # 18-11
						250	SVK	UGVL	PG # 18-11
		1¼"	NPT	-	No	236	SV	UGVL	PG # 18-10
					Yes	236	SVK	UGVL	PG # 18-11
		1½"	NPT	-	No	160	SV	UGVL	PG # 18-10
					Yes	160	SVK	UGVL	PG # 18-11
		2"	NPT	-	No	85	SV	UGVL	PG # 18-10
					Yes	85	SVK	UGVL	PG # 18-11
V6600	3-way	½"	NPT	-	No	250	LV	UGVL	PG # 18-11
					Yes	250	LVK	UGVL	PG # 18-11
		¾"	NPT	-	No	211	LV	UGVL	PG # 18-11
					Yes	211	LVK	UGVL	PG # 18-11
		1"	NPT	-	No	92	LV	UGVL	PG # 18-11
						250	SV	UGVL	PG # 18-10
					Yes	92	LVK	UGVL	PG # 18-11
						250	SVK	UGVL	PG # 18-11
		1¼"	NPT	-	No	236	SV	UGVL	PG # 18-10
					Yes	236	SVK	UGVL	PG # 18-11
		1½"	NPT	-	No	160	SV	UGVL	PG # 18-10
					Yes	160	SVK	UGVL	PG # 18-11
		2"	NPT	-	No	85	SV	UGVL	PG # 18-10
					Yes	85	SVK	UGVL	PG # 18-11
V6800	2-way	¾"	NPT	-	No	211	LV	UGVL	PG # 18-11
					Yes	211	LVK	UGVL	PG # 18-11
SIEBE\INVENSYS\BARBER COLMAN									
Belimo USA G2 Series	2-way	½"	NPT	-	No	250	LV	SGVL	PG # 18-11
					Yes	250	LVK	SGVL	PG # 18-11
		¾"	NPT	-	No	211	LV	SGVL	PG # 18-11
					Yes	211	LVK	SGVL	PG # 18-11
		1"	NPT	-	No	250	SV	SGVL	PG # 18-10
					Yes	250	SVK	SGVL	PG # 18-11
		1¼"	NPT	-	No	236	SV	SGVL	PG # 18-10
					Yes	236	SVK	SGVL	PG # 18-11
		1½"	NPT	-	No	160	SV	SGVL	PG # 18-10
					Yes	160	SVK	SGVL	PG # 18-11
		2"	NPT	-	No	85	SV	SGVL	PG # 18-10
					Yes	85	SVK	SGVL	PG # 18-11

All close-off pressures listed are approximate and based on valve condition and application.

067001 - 04/13 - Subject to change. © Belimo Aircontrols (USA), Inc.

Siebe\Invensys\Barber Colman

Belimo USA G2..., G3..., VB7000, VB9000 Series Valves

Linkage/Actuator Selection Guide

Valve Body Model	Valve Configuration	Size	Body Type	Flow	Fail-Safe	Close-Off psi	Belimo Actuator Series	Belimo Linkage	Linkage List Price
Belimo USA G2...S Series	2-way	½"	NPT	-	No	250	LV	SGVL	PG # 18-11
					Yes	250	LVK	SGVL	PG # 18-11
		¾"	NPT	-	No	211	LV	SGVL	PG # 18-11
					Yes	211	LVK	SGVL	PG # 18-11
		1"	NPT	-	No	92	LV	SGVL	PG # 18-11
						250	SV	SGVL	PG # 18-10
					Yes	92	LVK	SGVL	PG # 18-11
						250	SVK	SGVL	PG # 18-11
		1¼"	NPT	-	No	236	SV	SGVL	PG # 18-10
					Yes	236	SVK	SGVL	PG # 18-11
		1½"	NPT	-	No	160	SV	SGVL	PG # 18-10
					Yes	160	SVK	SGVL	PG # 18-11
		2"	NPT	-	No	85	SV	SGVL	PG # 18-10
					Yes	85	SVK	SGVL	PG # 18-11
Belimo USA G3 Series	3-way	½"	NPT	-	No	250	LV	SGVL	PG # 18-11
					Yes	250	LVK	SGVL	PG # 18-11
		¾"	NPT	-	No	211	LV	SGVL	PG # 18-11
					Yes	211	LVK	SGVL	PG # 18-11
		1"	NPT	-	No	92	LV	SGVL	PG # 18-11
						250	SV	SGVL	PG # 18-10
					Yes	92	LVK	SGVL	PG # 18-11
						250	SVK	SGVL	PG # 18-11
		1¼"	NPT	-	No	236	SV	SGVL	PG # 18-10
					Yes	236	SVK	SGVL	PG # 18-11
		1½"	NPT	-	No	160	SV	SGVL	PG # 18-10
					Yes	160	SVK	SGVL	PG # 18-11
		2"	NPT	-	No	85	SV	SGVL	PG # 18-10
					Yes	85	SVK	SGVL	PG # 18-11
VB7000 Series	2-way	½"	NPT	-	No	250	LV	SGVL	PG # 18-11
					Yes	250	LVK	SGVL	PG # 18-11
		¾"	NPT	-	No	211	LV	SGVL	PG # 18-11
					Yes	211	LVK	SGVL	PG # 18-11
		1"	NPT	-	No	92	LV	SGVL	PG # 18-11
						250	SV	SGVL	PG # 18-10
					Yes	92	LVK	SGVL	PG # 18-11
						250	SVK	SGVL	PG # 18-11
		1¼"	NPT	-	No	236	SV	SGVL	PG # 18-10
					Yes	236	SVK	SGVL	PG # 18-11
		1½"	NPT	-	No	160	SV	SGVL	PG # 18-10
					Yes	160	SVK	SGVL	PG # 18-11
		2"	NPT	-	No	85	SV	SGVL	PG # 18-10
					Yes	85	SVK	SGVL	PG # 18-11
	3-way	½"	NPT	-	No	250	LV	SGVL	PG # 18-11
					Yes	250	LVK	SGVL	PG # 18-11
		¾"	NPT	-	No	211	LV	SGVL	PG # 18-11
					Yes	211	LVK	SGVL	PG # 18-11
		1"	NPT	-	No	92	LV	SGVL	PG # 18-11
						250	SV	SGVL	PG # 18-10
					Yes	92	LVK	SGVL	PG # 18-11
						250	SVK	SGVL	PG # 18-11
		1¼"	NPT	-	No	236	SV	SGVL	PG # 18-10
					Yes	236	SVK	SGVL	PG # 18-11
		1½"	NPT	-	No	160	SV	SGVL	PG # 18-10
					Yes	160	SVK	SGVL	PG # 18-11
		2"	NPT	-	No	85	SV	SGVL	PG # 18-10
					Yes	85	SVK	SGVL	PG # 18-11
VB9000 Series	2-way	½"	NPT	-	No	250	LV	SGVL	PG # 18-11
					Yes	250	LVK	SGVL	PG # 18-11
		¾"	NPT	-	No	211	LV	SGVL	PG # 18-11
					Yes	211	LVK	SGVL	PG # 18-11
		1"	NPT	-	No	92	LV	SGVL	PG # 18-11
						250	SV	SGVL	PG # 18-10
					Yes	92	LVK	SGVL	PG # 18-11
						250	SVK	SGVL	PG # 18-11
		1¼"	NPT	-	No	236	SV	SGVL	PG # 18-10
					Yes	236	SVK	SGVL	PG # 18-11

All close-off pressures listed are approximate and based on valve condition and application.

067001- 04/13 - Subject to change. © Belimo Aircontrols (USA), Inc.

Valve Body Model	Valve Configuration	Size	Body Type	Flow	Fail-Safe	Close-Off psi	Belimo Actuator Series	Belimo Linkage	Linkage List Price
VB9000 Series	3-way	½"	NPT	-	No	250	LV	SGVL	PG # 18-11
					Yes	250	LVK	SGVL	PG # 18-11
		¾"	NPT	-	No	211	LV	SGVL	PG # 18-11
					Yes	211	LVK	SGVL	PG # 18-11
		1"	NPT	-	No	92	LV	SGVL	PG # 18-11
						250	SV	SGVL	PG # 18-10
					Yes	92	LVK	SGVL	PG # 18-11
						250	SVK	SGVL	PG # 18-11
		1¼"	NPT	-	No	236	SV	SGVL	PG # 18-10
					Yes	236	SVK	SGVL	PG # 18-11
Belimo USA G2 Series	2-way	1"	NPT	-	No	250	AM	UGLK1000	$525.00
					Yes	250	AF	UGLK1000	$525.00
		1¼"	NPT	-	No	250	AM	UGLK1000	$525.00
					Yes	250	AF	UGLK1000	$525.00
		1½"	NPT	-	No	217	AM	UGLK1000	$525.00
					Yes	217	AF	UGLK1000	$525.00
		2"	NPT	-	No	122	AM	UGLK1000	$525.00
					Yes	122	AF	UGLK1000	$525.00
Belimo USA G3 Series	3-way	1"	NPT	-	No	250	AM	UGLK1000	$525.00
					Yes	250	AF	UGLK1000	$525.00
		1¼"	NPT	-	No	250	AM	UGLK1000	$525.00
					Yes	250	AF	UGLK1000	$525.00
		1½"	NPT	-	No	217	AM	UGLK1000	$525.00
					Yes	217	AF	UGLK1000	$525.00
		2"	NPT	-	No	122	AM	UGLK1000	$525.00
					Yes	122	AF	UGLK1000	$525.00
Belimo USA G2 Series	2-way	½"	NPT	-	No	250	LM	UGLK1150	$350.00
					Yes	250	LF	UGLK1150	$350.00
		¾"	NPT	-	No	215	LM	UGLK1150	$350.00
						250	NM	UGLK1150	$350.00
					Yes	215	LF	UGLK1150	$350.00
		1"	NPT	-	No	120	LM	UGLK1150	$350.00
						244	NM	UGLK1150	$350.00
					Yes	95	LF	UGLK1150	$350.00
		1¼"	NPT	-	No	78	LM	UGLK1150	$350.00
						156	NM	UGLK1150	$350.00
					Yes	61	LF	UGLK1150	$350.00
Belimo USA G3 Series	3-way	½"	NPT	-	No	250	LM	UGLK1150	$350.00
					Yes	250	LF	UGLK1150	$350.00
		¾"	NPT	-	No	215	LM	UGLK1150	$350.00
						250	NM	UGLK1150	$350.00
					Yes	215	LF	UGLK1150	$350.00
		1"	NPT	-	No	120	LM	UGLK1150	$350.00
						244	NM	UGLK1150	$350.00
					Yes	95	LF	UGLK1150	$350.00
		1¼"	NPT	-	No	78	LM	UGLK1150	$350.00
						156	NM	UGLK1150	$350.00
					Yes	61	LF	UGLK1150	$350.00
VB304X-0-1-4	3-way	½"	NPT	Mixing	No	250	LM	UGLK1002	$475.00
							NM	UGLK1002	$475.00
					Yes	250	AF	UGLK1004	$525.00
							LF	UGLK1002	$475.00
VB304X-0-1-7	3-way	¾"	NPT	Mixing	No	153	LM	UGLK1002	$475.00
						250	NM	UGLK1002	$475.00
					Yes	119	LF	UGLK1002	$475.00
VB304X-0-1-8	3-way	1"	NPT	Mixing	No	86	LM	UGLK1002	$475.00
						173	NM	UGLK1002	$475.00
						250	AM	UGLK1004	$525.00
					Yes	67	LF	UGLK1002	$475.00
						250	AF	UGLK1004	$525.00
VB304X-0-1-9	3-way	1¼"	NPT	Mixing	No	55	LM	UGLK1002	$475.00
						110	NM	UGLK1002	$475.00
						221	AM	UGLK1004	$525.00
					Yes	43	LF	UGLK1002	$475.00
						221	AF	UGLK1004	$525.00

All close-off pressures listed are approximate and based on valve condition and application.

067001 - 04/13 - Subject to change. © Belimo Aircontrols (USA), Inc.

Siebe\Invensys\Barber Colman

VB3..., VB7... Series Valves

Linkage/Actuator Selection Guide

Valve Body Model	Valve Configuration	Size	Body Type	Flow	Fail-Safe	Close-Off psi	Belimo Actuator Series	Belimo Linkage	Linkage List Price
VB304X-0-1-10	3-way	1½"	NPT	Mixing	No	38	LM	UGLK1002	$475.00
						77	NM	UGLK1002	$475.00
						153	AM	UGLK1004	$525.00
						250	GM	UGLK1004	$525.00
					Yes	30	LF	UGLK1002	$475.00
						153	AF	UGLK1004	$525.00
						250	GK	UGLK1004	$525.00
VB304X-0-1-11	3-way	2"	NPT	Mixing	No	22	LM	UGLK1002	$475.00
						43	NM	UGLK1002	$475.00
						86	AM	UGLK1004	$525.00
						173	GM	UGLK1004	$525.00
					Yes	17	LF	UGLK1002	$475.00
						86	AF	UGLK1004	$525.00
						173	GK	UGLK1004	$525.00
VB7XXX-0-4-1	2-way	½"	NPT	-	No	250	LM	UGLK1150	$350.00
					Yes	250	LF	UGLK1150	$350.00
	3-way	½"	NPT	-	No	250	LM	UGLK1150	$350.00
					Yes	250	LF	UGLK1150	$350.00
VB7XXX-0-4-2	2-way	½"	NPT	-	No	250	LM	UGLK1150	$350.00
					Yes	250	LF	UGLK1150	$350.00
	3-way	½"	NPT	-	No	250	LM	UGLK1150	$350.00
					Yes	250	LF	UGLK1150	$350.00
VB7XXX-0-4-3	2-way	½"	NPT	-	No	250	LM	UGLK1150	$350.00
					Yes	250	LF	UGLK1150	$350.00
	3-way	½"	NPT	-	No	250	LM	UGLK1150	$350.00
					Yes	250	LF	UGLK1150	$350.00
VB7XXX-0-4-4	2-way	½"	NPT	-	No	250	LM	UGLK1150	$350.00
					Yes	250	LF	UGLK1150	$350.00
	3-way	½"	NPT	-	No	250	LM	UGLK1150	$350.00
					Yes	250	LF	UGLK1150	$350.00
VB7XXX-0-4-5	2-way	¾"	NPT	-	No	215	LM	UGLK1150	$350.00
						250	NM	UGLK1150	$350.00
					Yes	215	LF	UGLK1150	$350.00
	3-way	¾"	NPT	-	No	215	LM	UGLK1150	$350.00
						250	NM	UGLK1150	$350.00
					Yes	215	LF	UGLK1150	$350.00
VB7XXX-0-4-6	2-way	¾"	NPT	-	No	215	LM	UGLK1150	$350.00
						250	NM	UGLK1150	$350.00
					Yes	215	LF	UGLK1150	$350.00
	3-way	¾"	NPT	-	No	215	LM	UGLK1150	$350.00
						250	NM	UGLK1150	$350.00
					Yes	215	LF	UGLK1150	$350.00
VB7XXX-0-4-7	2-way	1"	NPT	-	No	120	LM	UGLK1150	$350.00
						244	NM	UGLK1150	$350.00
						250	AM	UGLK1000	$525.00
					Yes	95	LF	UGLK1150	$350.00
						250	AF	UGLK1000	$525.00
	3-way	1"	NPT	-	No	120	LM	UGLK1150	$350.00
						244	NM	UGLK1150	$350.00
						250	AM	UGLK1000	$525.00
					Yes	95	LF	UGLK1150	$350.00
						250	AF	UGLK1000	$525.00
VB7XXX-0-4-8	2-way	1"	NPT	-	No	120	LM	UGLK1150	$350.00
						244	NM	UGLK1150	$350.00
						250	AM	UGLK1000	$525.00
					Yes	95	LF	UGLK1150	$350.00
						250	AF	UGLK1000	$525.00
	3-way	1"	NPT	-	No	120	LM	UGLK1150	$350.00
						244	NM	UGLK1150	$350.00
						250	AM	UGLK1000	$525.00
					Yes	95	LF	UGLK1150	$350.00
						250	AF	UGLK1000	$525.00
VB7XXX-0-4-9	2-way	1¼"	NPT	-	No	78	LM	UGLK1150	$350.00
						156	NM	UGLK1150	$350.00
						250	AM	UGLK1000	$525.00
					Yes	61	LF	UGLK1150	$350.00
						250	AF	UGLK1000	$525.00

All close-off pressures listed are approximate and based on valve condition and application.

067001- 04/13 - Subject to change. © Belimo Aircontrols (USA), Inc.

Valve Body Model	Valve Configuration	Size	Body Type	Flow	Fail-Safe	Close-Off psi	Belimo Actuator Series	Belimo Linkage	Linkage List Price
VB7XXX-0-4-9	3-way	1¼"	NPT	-	No	78	LM	UGLK1150	$350.00
						156	NM	UGLK1150	$350.00
						250	AM	UGLK1000	$525.00
					Yes	61	LF	UGLK1150	$350.00
						250	AF	UGLK1000	$525.00
VB7XXX-0-4-10	2-way	1½"	NPT	-	No	217	AM	UGLK1000	$525.00
					Yes	217	AF	UGLK1000	$525.00
	3-way	1½"	NPT	-	No	217	AM	UGLK1000	$525.00
					Yes	217	AF	UGLK1000	$525.00
VB7XXX-0-4-11	2-way	2"	NPT	-	No	122	AM	UGLK1000	$525.00
					Yes	122	AF	UGLK1000	$525.00
	3-way	2"	NPT	-	No	122	AM	UGLK1000	$525.00
					Yes	122	AF	UGLK1000	$525.00
VB804X-0-1-4	3-way	½"	NPT	Mixing	No	250	LM	UGLK1002	$475.00
							NM	UGLK1002	$475.00
					Yes	250	AF	UGLK1004	$525.00
							LF	UGLK1002	$475.00
VB804X-0-1-7	3-way	¾"	NPT	Mixing	No	153	LM	UGLK1002	$475.00
						250	NM	UGLK1002	$475.00
					Yes	119	LF	UGLK1002	$475.00
VB804X-0-1-8	3-way	1"	NPT	Mixing	No	86	LM	UGLK1002	$475.00
						173	NM	UGLK1002	$475.00
						250	AM	UGLK1004	$525.00
					Yes	67	LF	UGLK1002	$475.00
						250	AF	UGLK1004	$525.00
VB804X-0-1-9	3-way	1¼"	NPT	Mixing	No	55	LM	UGLK1002	$475.00
						110	NM	UGLK1002	$475.00
						221	AM	UGLK1004	$525.00
					Yes	43	LF	UGLK1002	$475.00
						221	AF	UGLK1004	$525.00
VB804X-0-1-10	3-way	1½"	NPT	Mixing	No	38	LM	UGLK1002	$475.00
						77	NM	UGLK1002	$475.00
						153	AM	UGLK1004	$525.00
						250	GM	UGLK1004	$525.00
					Yes	30	LF	UGLK1002	$475.00
						153	AF	UGLK1004	$525.00
						250	GK	UGLK1004	$525.00
VB804X-0-1-11	3-way	2"	NPT	Mixing	No	22	LM	UGLK1002	$475.00
						43	NM	UGLK1002	$475.00
						86	AM	UGLK1004	$525.00
						173	GM	UGLK1004	$525.00
					Yes	17	LF	UGLK1002	$475.00
						86	AF	UGLK1004	$525.00
						173	GK	UGLK1004	$525.00
VB9XXX-0-4-1	2-way	½"	NPT	-	No	250	LM	UGLK1150	$350.00
					Yes	250	LF	UGLK1150	$350.00
	3-way	½"	NPT	-	No	250	LM	UGLK1150	$350.00
					Yes	250	LF	UGLK1150	$350.00
VB9XXX-0-4-2	2-way	½"	NPT	-	No	250	LM	UGLK1150	$350.00
					Yes	250	LF	UGLK1150	$350.00
	3-way	½"	NPT	-	No	250	LM	UGLK1150	$350.00
					Yes	250	LF	UGLK1150	$350.00
VB9XXX-0-4-3	2-way	½"	NPT	-	No	250	LM	UGLK1150	$350.00
					Yes	250	LF	UGLK1150	$350.00
	3-way	½"	NPT	-	No	250	LM	UGLK1150	$350.00
					Yes	250	LF	UGLK1150	$350.00
VB9XXX-0-4-4	2-way	½"	NPT	-	No	250	LM	UGLK1150	$350.00
					Yes	250	LF	UGLK1150	$350.00
	3-way	½"	NPT	-	No	130	LM	UGLK1150	$350.00
					Yes	250	LF	UGLK1150	$350.00
VB9XXX-0-4-5	2-way	¾"	NPT	-	No	215	LM	UGLK1150	$350.00
						250	NM	UGLK1150	$350.00
					Yes	215	LF	UGLK1150	$350.00
	3-way	¾"	NPT	-	No	215	LM	UGLK1150	$350.00
						250	NM	UGLK1150	$350.00
					Yes	215	LF	UGLK1150	$350.00

All close-off pressures listed are approximate and based on valve condition and application.

067001 - 04/13 - Subject to change. © Belimo Aircontrols (USA), Inc.

Siebe\Invensys\Barber Colman

VB9… Series Valves

Linkage/Actuator Selection Guide

Valve Body Model	Valve Configuration	Size	Body Type	Flow	Fail-Safe	Close-Off psi	Belimo Actuator Series	Belimo Linkage	Linkage List Price
VB9XXX-0-4-6	2-way	¾"	NPT	-	No	215	LM	UGLK1150	$350.00
						250	NM	UGLK1150	$350.00
					Yes	215	LF	UGLK1150	$350.00
	3-way	¾"	NPT	-	No	215	LM	UGLK1150	$350.00
						250	NM	UGLK1150	$350.00
					Yes	215	LF	UGLK1150	$350.00
VB9XXX-0-4-7	2-way	1"	NPT	-	No	120	LM	UGLK1150	$350.00
						244	NM	UGLK1150	$350.00
						250	AM	UGLK1000	$525.00
					Yes	95	LF	UGLK1150	$350.00
						250	AF	UGLK1000	$525.00
	3-way	1"	NPT	-	No	120	LM	UGLK1150	$350.00
						244	NM	UGLK1150	$350.00
						250	AM	UGLK1000	$525.00
					Yes	95	LF	UGLK1150	$350.00
						250	AF	UGLK1000	$525.00
VB9XXX-0-4-8	2-way	1"	NPT	-	No	120	LM	UGLK1150	$350.00
						244	NM	UGLK1150	$350.00
						250	AM	UGLK1000	$525.00
					Yes	250	AF	UGLK1000	$525.00
	3-way	1"	NPT	-	No	120	LM	UGLK1150	$350.00
						244	NM	UGLK1150	$350.00
						250	AM	UGLK1000	$525.00
					Yes	95	LF	UGLK1150	$350.00
						250	AF	UGLK1000	$525.00
VB9XXX-0-4-9	2-way	1¼"	NPT	-	No	78	LM	UGLK1150	$350.00
						156	NM	UGLK1150	$350.00
						250	AM	UGLK1000	$525.00
					Yes	61	LF	UGLK1150	$350.00
						250	AF	UGLK1000	$525.00
	3-way	1¼"	NPT	-	No	78	LM	UGLK1150	$350.00
						156	NM	UGLK1150	$350.00
						250	AM	UGLK1000	$525.00
					Yes	61	LF	UGLK1150	$350.00
						250	AF	UGLK1000	$525.00
VB9XXX-0-4-10 (Pre '94)	2-way	1½"	NPT	-	No	104	AM	UGLK1008	$525.00
						209	GM	UGLK1008	$525.00
						250	2*GM	UGLK1064	$725.00
					Yes	104	AF	UGLK1008	$525.00
						209	2*AF	UGLK1064	$725.00
							GK	UGLK1008	$525.00
						250	2*GK	UGLK1064	$725.00
	3-way	1½"	NPT	-	No	104	AM	UGLK1008	$525.00
						209	GM	UGLK1008	$525.00
						250	2*GM	UGLK1064	$725.00
					Yes	104	AF	UGLK1008	$525.00
						209	2*AF	UGLK1064	$725.00
							GK	UGLK1008	$525.00
						250	2*GK	UGLK1064	$725.00
VB9XXX-0-4-10 (Post '94)	2-way	1½"	NPT	-	No	79	AM	UGLK1016	$525.00
						158	GM	UGLK1016	$525.00
						250	2*GM	UGLK1066	$725.00
					Yes	79	AF	UGLK1016	$525.00
						158	GK	UGLK1016	$525.00
						209	2*AF	UGLK1066	$725.00
						250	2*GK	UGLK1066	$725.00
	3-way	1½"	NPT	-	No	79	AM	UGLK1016	$525.00
						158	GM	UGLK1016	$525.00
						250	2*GM	UGLK1066	$725.00
					Yes	79	AF	UGLK1016	$525.00
						158	GK	UGLK1016	$525.00
						209	2*AF	UGLK1066	$725.00
						250	2*GK	UGLK1066	$725.00
VB9XXX-0-4-11 (Pre '94)	2-way	2"	NPT	-	No	59	AM	UGLK1008	$525.00
						117	GM	UGLK1008	$525.00
						209	2*GM	UGLK1064	$725.00

All close-off pressures listed are approximate and based on valve condition and application.

067001- 04/13 - Subject to change. © Belimo Aircontrols (USA), Inc.

Valve Body Model	Valve Configuration	Size	Body Type	Flow	Fail-Safe	Close-Off psi	Belimo Actuator Series	Belimo Linkage	Linkage List Price
VB9XXX-0-4-11 (Pre '94)	2-way	2"	NPT	-	Yes	59	AF	UGLK1008	$525.00
						117	2*AF	UGLK1064	$725.00
							GK	UGLK1008	$525.00
						209	2*GK	UGLK1064	$725.00
	3-way	2"	NPT	-	No	59	AM	UGLK1008	$525.00
						117	GM	UGLK1008	$525.00
						209	2*GM	UGLK1064	$725.00
					Yes	59	AF	UGLK1008	$525.00
						117	2*AF	UGLK1064	$725.00
							GK	UGLK1008	$525.00
						209	2*GK	UGLK1064	$725.00
VB9XXX-0-4-11 (Post '94)	2-way	2"	NPT	-	No	44	AM	UGLK1016	$525.00
						89	GM	UGLK1016	$525.00
						209	2*GM	UGLK1066	$725.00
					Yes	44	AF	UGLK1016	$525.00
						89	GK	UGLK1016	$525.00
						117	2*AF	UGLK1066	$725.00
						209	2*GK	UGLK1066	$725.00
	3-way	2"	NPT	-	No	44	AM	UGLK1016	$525.00
						89	GM	UGLK1016	$525.00
						209	2*GM	UGLK1066	$725.00
					Yes	44	AF	UGLK1016	$525.00
						89	GK	UGLK1016	$525.00
						117	2*AF	UGLK1066	$725.00
						209	2*GK	UGLK1066	$725.00
VB9XXX-0-4-12	2-way	2½"	NPT	-	No	38	AM	UGLK1010	$525.00
						75	GM	UGLK1010	$525.00
						134	2*GM	UGLK1070	$725.00
					Yes	38	AF	UGLK1010	$525.00
						75	2*AF	UGLK1070	$725.00
							GK	UGLK1010	$525.00
						134	2*GK	UGLK1070	$725.00
	3-way	2½"	NPT	-	No	38	AM	UGLK1010	$525.00
						75	GM	UGLK1010	$525.00
						134	2*GM	UGLK1070	$725.00
					Yes	38	AF	UGLK1010	$525.00
						75	2*AF	UGLK1070	$725.00
							GK	UGLK1010	$525.00
						134	2*GK	UGLK1070	$725.00
VB9XXX-0-4-13	2-way	3"	NPT	-	No	26	AM	UGLK1010	$525.00
						52	GM	UGLK1010	$525.00
						93	2*GM	UGLK1070	$725.00
					Yes	26	AF	UGLK1010	$525.00
						52	2*AF	UGLK1070	$725.00
							GK	UGLK1010	$525.00
						93	2*GK	UGLK1070	$725.00
	3-way	3"	NPT	-	No	26	AM	UGLK1010	$525.00
						52	GM	UGLK1010	$525.00
						93	2*GM	UGLK1070	$725.00
					Yes	26	AF	UGLK1010	$525.00
						52	2*AF	UGLK1070	$725.00
							GK	UGLK1010	$525.00
						93	2*GK	UGLK1070	$725.00
VB304X-0-2-12	3-way	2½"	Flanged	Mixing	No	38	AM	UGLK1006	$525.00
						75	GM	UGLK1006	$525.00
						134	2*GM	UGLK1072	$725.00
					Yes	38	AF	UGLK1006	$525.00
						75	2*AF	UGLK1072	$725.00
							GK	UGLK1006	$525.00
						134	2*GK	UGLK1072	$725.00
VB304X-0-2-13	3-way	3"	Flanged	Mixing	No	26	AM	UGLK1006	$525.00
						52	GM	UGLK1006	$525.00
						93	2*GM	UGLK1072	$725.00
					Yes	26	AF	UGLK1006	$525.00
						52	2*AF	UGLK1072	$725.00
							GK	UGLK1006	$525.00
						93	2*GK	UGLK1072	$725.00

All close-off pressures listed are approximate and based on valve condition and application.

067001 - 04/13 - Subject to change. © Belimo Aircontrols (USA), Inc.

Siebe\Invensys\Barber Colman

VB3..., VB8..., VB9... Series Valves

Linkage/Actuator Selection Guide

Valve Body Model	Valve Configuration	Size	Body Type	Flow	Fail-Safe	Close-Off psi	Belimo Actuator Series	Belimo Linkage	Linkage List Price
VB304X-0-2-14	3-way	4"	Flanged	Mixing	No	15	AM	UGLK1006	$525.00
						29	GM	UGLK1006	$525.00
						52	2*GM	UGLK1072	$725.00
					Yes	15	AF	UGLK1006	$525.00
						29	2*AF	UGLK1072	$725.00
							GK	UGLK1006	$525.00
						52	2*GK	UGLK1072	$725.00
VB304X-0-2-15	3-way	5"	Flanged	Mixing	No	7	AM	UGLK1014	$525.00
						14	GM	UGLK1014	$525.00
						25	2*GM	UGLK1076	$725.00
					Yes	7	AF	UGLK1014	$525.00
						14	2*AF	UGLK1076	$725.00
							GK	UGLK1014	$525.00
						25	2*GK	UGLK1076	$725.00
VB304X-0-2-16	3-way	6"	Flanged	Mixing	No	5	AM	UGLK1014	$525.00
						10	GM	UGLK1014	$525.00
						18	2*GM	UGLK1076	$725.00
					Yes	5	AF	UGLK1014	$525.00
						10	2*AF	UGLK1076	$725.00
							GK	UGLK1014	$525.00
						18	2*GK	UGLK1076	$725.00
VB804X-0-2-12	3-way	2½"	Flanged	Mixing	No	38	AM	UGLK1006	$525.00
						75	GM	UGLK1006	$525.00
						134	2*GM	UGLK1072	$725.00
					Yes	38	AF	UGLK1006	$525.00
						75	2*AF	UGLK1072	$725.00
							GK	UGLK1006	$525.00
						134	2*GK	UGLK1072	$725.00
VB804X-0-2-13	3-way	3"	Flanged	Mixing	No	26	AM	UGLK1006	$525.00
						52	GM	UGLK1006	$525.00
						93	2*GM	UGLK1072	$725.00
					Yes	26	AF	UGLK1006	$525.00
						52	2*AF	UGLK1072	$725.00
							GK	UGLK1006	$525.00
						93	2*GK	UGLK1072	$725.00
VB804X-0-2-14	3-way	4"	Flanged	Mixing	No	15	AM	UGLK1006	$525.00
						29	GM	UGLK1006	$525.00
						52	2*GM	UGLK1072	$725.00
					Yes	15	AF	UGLK1006	$525.00
						29	2*AF	UGLK1072	$725.00
							GK	UGLK1006	$525.00
						52	2*GK	UGLK1072	$725.00
VB804X-0-2-15	3-way	5"	Flanged	Mixing	No	7	AM	UGLK1014	$525.00
						14	GM	UGLK1014	$525.00
						25	2*GM	UGLK1076	$725.00
					Yes	7	AF	UGLK1014	$525.00
						14	2*AF	UGLK1076	$725.00
							GK	UGLK1014	$525.00
						25	2*GK	UGLK1076	$725.00
VB804X-0-2-16	3-way	6"	Flanged	Mixing	No	5	AM	UGLK1014	$525.00
						10	GM	UGLK1014	$525.00
						18	2*GM	UGLK1076	$725.00
					Yes	5	AF	UGLK1014	$525.00
						10	2*AF	UGLK1076	$725.00
							GK	UGLK1014	$525.00
						18	2*GK	UGLK1076	$725.00
VB9XXX-0-5-12	2-way	2½"	Flanged	-	No	38	AM	UGLK1010	$525.00
						75	GM	UGLK1010	$525.00
						134	2*GM	UGLK1070	$725.00
					Yes	38	AF	UGLK1010	$525.00
						75	2*AF	UGLK1070	$725.00
							GK	UGLK1010	$525.00
						134	2*GK	UGLK1070	$725.00
	3-way	2½"	Flanged	-	No	38	AM	UGLK1010	$525.00
						75	GM	UGLK1010	$525.00
						134	2*GM	UGLK1070	$725.00

All close-off pressures listed are approximate and based on valve condition and application.

067001- 04/13 - Subject to change. © Belimo Aircontrols (USA), Inc.

Siebe\Invensys\Barber Colman

VB9… Series Valves

Linkage/Actuator Selection Guide

Siemens\Landis\Powers

591 Series Valves

Linkage/Actuator Selection Guide

Valve Body Model	Valve Configuration	Size	Body Type	Flow	Fail-Safe	Close-Off psi	Belimo Actuator Series	Belimo Linkage	Linkage List Price
VB9XXX-0-5-12	3-way	2½"	Flanged	-	Yes	38	AF	UGLK1010	$525.00
						75	2*AF	UGLK1070	$725.00
							GK	UGLK1010	$525.00
						134	2*GK	UGLK1070	$725.00
VB9XXX-0-5-13	2-way	3"	Flanged	-	No	26	AM	UGLK1010	$525.00
						52	GM	UGLK1010	$525.00
						93	2*GM	UGLK1070	$725.00
					Yes	26	AF	UGLK1010	$525.00
						52	2*AF	UGLK1070	$725.00
							GK	UGLK1010	$525.00
						93	2*GK	UGLK1070	$725.00
	3-way	3"	Flanged	-	No	26	AM	UGLK1010	$525.00
						52	GM	UGLK1010	$525.00
						93	2*GM	UGLK1070	$725.00
					Yes	26	AF	UGLK1010	$525.00
						52	2*AF	UGLK1070	$725.00
							GK	UGLK1010	$525.00
						93	2*GK	UGLK1070	$725.00
VB9XXX-0-5-14	2-way	4"	Flanged	-	No	11	AM	UGLK1012	$525.00
						22	GM	UGLK1012	$525.00
						40	2*GM	UGLK1074	$725.00
					Yes	11	AF	UGLK1012	$525.00
						22	2*AF	UGLK1074	$725.00
							GK	UGLK1012	$525.00
						40	2*GK	UGLK1074	$725.00
	3-way	4"	Flanged	-	No	11	AM	UGLK1012	$525.00
						22	GM	UGLK1012	$525.00
						40	2*GM	UGLK1074	$725.00
					Yes	11	AF	UGLK1012	$525.00
						22	2*AF	UGLK1074	$725.00
							GK	UGLK1012	$525.00
						40	2*GK	UGLK1074	$725.00
SIEMENS/LANDIS/POWERS									
591 Series	2-way	2½"	Flanged	-	No	55	AM	UGLK1204	$525.00
						110	GM	UGLK1204	$525.00
						196	2*GM	UGLK1270	$725.00
					Yes	55	AF	UGLK1204	$525.00
						110	2*AF	UGLK1270	$725.00
							GK	UGLK1204	$525.00
						196	2*GK	UGLK1270	$725.00
		3"	Flanged	-	No	38	AM	UGLK1204	$525.00
						77	GM	UGLK1204	$525.00
						136	2*GM	UGLK1270	$725.00
					Yes	38	AF	UGLK1204	$525.00
						77	2*AF	UGLK1270	$725.00
							GK	UGLK1204	$525.00
						136	2*GK	UGLK1270	$725.00
		4"	Flanged	-	No	11	AM	UGLK1206	$525.00
						22	GM	UGLK1206	$525.00
						40	2*GM	UGLK1274	$725.00
					Yes	11	AF	UGLK1206	$525.00
						22	2*AF	UGLK1274	$725.00
							GK	UGLK1206	$525.00
						40	2*GK	UGLK1274	$725.00
		5"	Flanged	-	No	14	GM	UGLK1206	$525.00
						25	2*GM	UGLK1274	$725.00
					Yes	14	2*AF	UGLK1274	$725.00
							GK	UGLK1206	$525.00
						25	2*GK	UGLK1274	$725.00
		6"	Flanged	-	No	18	2*GM	UGLK1274	$725.00
					Yes	10	2*AF	UGLK1274	$725.00
						18	2*GK	UGLK1274	$725.00

All close-off pressures listed are approximate and based on valve condition and application.

RETROFIT SOLUTIONS

067001 - 04/13 - Subject to change. © Belimo Aircontrols (USA), Inc.

Siemens\Landis\Powers

591, 599 Flowrite Series Valves

Linkage/Actuator Selection Guide

Valve Body Model	Valve Configuration	Size	Body Type	Flow	Fail-Safe	Close-Off psi	Belimo Actuator Series	Belimo Linkage	Linkage List Price
591 Series	3-way	2½"	Flanged	-	No	55	AM	UGLK1204	$525.00
						110	GM	UGLK1204	$525.00
						196	2*GM	UGLK1270	$725.00
					Yes	55	AF	UGLK1204	$525.00
						110	2*AF	UGLK1270	$725.00
							GK	UGLK1204	$525.00
						196	2*GK	UGLK1270	$725.00
		3"	Flanged	-	No	38	AM	UGLK1204	$525.00
						77	GM	UGLK1204	$525.00
						136	2*GM	UGLK1270	$725.00
					Yes	38	AF	UGLK1204	$525.00
						77	2*AF	UGLK1270	$725.00
							GK	UGLK1204	$525.00
						136	2*GK	UGLK1270	$725.00
		4"	Flanged	-	No	11	AM	UGLK1206	$525.00
						22	GM	UGLK1206	$525.00
						40	2*GM	UGLK1274	$725.00
					Yes	11	AF	UGLK1206	$525.00
						22	2*AF	UGLK1274	$725.00
							GK	UGLK1206	$525.00
						40	2*GK	UGLK1274	$725.00
		5"	Flanged	-	No	14	GM	UGLK1206	$525.00
						25	2*GM	UGLK1274	$725.00
					Yes	14	2*AF	UGLK1274	$725.00
							GK	UGLK1206	$525.00
						25	2*GK	UGLK1274	$725.00
		6"	Flanged	-	No	18	2*GM	UGLK1274	$725.00
					Yes	10	2*AF	UGLK1274	$725.00
						18	2*GK	UGLK1274	$725.00
599 Flowrite	2-way	2½"	Flanged	-	No	55	AM	UGLK1210	$525.00
						110	GM	UGLK1210	$525.00
						196	2*GM	UGLK1272	$725.00
					Yes	55	AF	UGLK1210	$525.00
						110	2*AF	UGLK1272	$725.00
							GK	UGLK1210	$525.00
						196	2*GK	UGLK1272	$725.00
		3"	Flanged	-	No	38	AM	UGLK1210	$525.00
						77	GM	UGLK1210	$525.00
						136	2*GM	UGLK1272	$725.00
					Yes	38	AF	UGLK1210	$525.00
						77	2*AF	UGLK1272	$725.00
							GK	UGLK1210	$525.00
						136	2*GK	UGLK1272	$725.00
		4"	Flanged	-	No	11	AM	UGLK1212	$525.00
						22	GM	UGLK1212	$525.00
						40	2*GM	UGLK1276	$725.00
					Yes	11	AF	UGLK1212	$525.00
						22	2*AF	UGLK1276	$725.00
							GK	UGLK1212	$525.00
						40	2*GK	UGLK1276	$725.00
		5"	Flanged	-	No	14	GM	UGLK1212	$525.00
						25	2*GM	UGLK1276	$725.00
					Yes	14	2*AF	UGLK1276	$725.00
							GK	UGLK1212	$525.00
						25	2*GK	UGLK1276	$725.00
	3-way	2½"	Flanged	-	No	55	AM	UGLK1210	$525.00
						110	GM	UGLK1210	$525.00
						196	2*GM	UGLK1272	$725.00
					Yes	55	AF	UGLK1210	$525.00
						110	2*AF	UGLK1272	$725.00
							GK	UGLK1210	$525.00
						196	2*GK	UGLK1272	$725.00
		3"	Flanged	-	No	38	AM	UGLK1210	$525.00
						77	GM	UGLK1210	$525.00
						136	2*GM	UGLK1272	$725.00

All close-off pressures listed are approximate and based on valve condition and application.

067001- 04/13 - Subject to change. © Belimo Aircontrols (USA), Inc.

Valve Body Model	Valve Configuration	Size	Body Type	Flow	Fail-Safe	Close-Off psi	Belimo Actuator Series	Belimo Linkage	Linkage List Price
599 Flowrite	3-way	3"	Flanged	-	Yes	38	AF	UGLK1210	$525.00
						77	2*AF	UGLK1272	$725.00
							GK	UGLK1210	$525.00
						136	2*GK	UGLK1272	$725.00
		4"	Flanged	-	No	11	AM	UGLK1212	$525.00
						22	GM	UGLK1212	$525.00
						40	2*GM	UGLK1276	$725.00
					Yes	11	AF	UGLK1212	$525.00
						22	2*AF	UGLK1276	$725.00
							GK	UGLK1212	$525.00
						40	2*GK	UGLK1276	$725.00
		5"	Flanged	-	No	14	GM	UGLK1212	$525.00
						25	2*GM	UGLK1276	$725.00
					Yes	14	2*AF	UGLK1276	$725.00
							GK	UGLK1212	$525.00
						25	2*GK	UGLK1276	$725.00
591 Series	2-way	½"	NPT	-	No	250	AM	UGLK1200	$525.00
							LV	UGVL	PG # 18-11
					Yes	250	LVK	UGVL	PG # 18-11
							NF	UGLK1200	$525.00
		¾"	NPT	-	No	211	LV	UGVL	PG # 18-11
					Yes	211	LVK	UGVL	PG # 18-11
						250	NF	UGLK1200	$525.00
		1"	NPT	-	No	92	LV	UGVL	PG # 18-11
						250	AM	UGLK1200	$525.00
							SV	UGVL	PG # 18-10
					Yes	92	LVK	UGVL	PG # 18-11
						244	NF	UGLK1200	$525.00
						250	SVK	UGVL	PG # 18-11
						250	AF	UGLK1200	$525.00
		1¼"	NPT	-	No	236	SV	UGVL	PG # 18-10
						250	AM	UGLK1200	$525.00
					Yes	156	NF	UGLK1200	$525.00
						236	SVK	UGVL	PG # 18-11
						250	AF	UGLK1200	$525.00
		1½"	NPT	-	No	104	AM	UGLK1202	$525.00
						209	GM	UGLK1202	$525.00
					Yes	52	NF	UGLK1202	$525.00
						104	AF	UGLK1202	$525.00
						209	GK	UGLK1202	$525.00
		2"	NPT	-	No	59	AM	UGLK1202	$525.00
						117	GM	UGLK1202	$525.00
					Yes	29	NF	UGLK1202	$525.00
						59	AF	UGLK1202	$525.00
						117	GK	UGLK1202	$525.00
	3-way	½"	NPT	-	No	250	AM	UGLK1200	$525.00
							LV	UGVL	PG # 18-11
					Yes	250	LVK	UGVL	PG # 18-11
							NF	UGLK1200	$525.00
		¾"	NPT	-	No	211	LV	UGVL	PG # 18-11
					Yes	211	LVK	UGVL	PG # 18-11
						250	NF	UGLK1200	$525.00
		1"	NPT	-	No	92	LV	UGVL	PG # 18-11
						250	AM	UGLK1200	$525.00
							SV	UGVL	PG # 18-10
					Yes	92	LVK	UGVL	PG # 18-11
						244	NF	UGLK1200	$525.00
						250	SVK	UGVL	PG # 18-11
						250	AF	UGLK1200	$525.00
		1¼"	NPT	-	No	236	SV	UGVL	PG # 18-10
						250	AM	UGLK1200	$525.00
					Yes	156	NF	UGLK1200	$525.00
						236	SVK	UGVL	PG # 18-11
						250	AF	UGLK1200	$525.00

All close-off pressures listed are approximate and based on valve condition and application.

067001 - 04/13 - Subject to change. © Belimo Aircontrols (USA), Inc.

Siemens\Landis\Powers

591, 599 Flowrite Series Valves

Linkage/Actuator Selection Guide

Valve Body Model	Valve Configuration	Size	Body Type	Flow	Fail-Safe	Close-Off psi	Belimo Actuator Series	Belimo Linkage	Linkage List Price
591 Series	3-way	1½"	NPT	-	No	217	AM	UGLK1200	$525.00
						250	GM	UGLK1200	$525.00
					Yes	109	NF	UGLK1200	$525.00
						217	AF	UGLK1200	$525.00
						250	GK	UGLK1200	$525.00
		2"	NPT	-	No	85	SV	UGVL	PG # 18-10
						122	AM	UGLK1200	$525.00
						244	GM	UGLK1200	$525.00
					Yes	61	NF	UGLK1200	$525.00
						85	SVK	UGVL	PG # 18-11
						122	AF	UGLK1200	$525.00
						244	GK	UGLK1200	$525.00
599 Flowrite	2-way	½"	NPT	-	No	250	AM	UGLK1208	$525.00
							LV	UGVL	PG # 18-11
					Yes	250	LVK	UGVL	PG # 18-11
							NF	UGLK1208	$525.00
		¾"	NPT	-	No	211	LV	UGVL	PG # 18-11
						250	AM	UGLK1208	$525.00
					Yes	211	LVK	UGVL	PG # 18-11
						250	NF	UGLK1208	$525.00
		1"	NPT	-	No	92	LV	UGVL	PG # 18-11
						250	AM	UGLK1208	$525.00
							SV	UGVL	PG # 18-10
					Yes	92	LVK	UGVL	PG # 18-11
						173	NF	UGLK1208	$525.00
						250	SVK	UGVL	PG # 18-11
						250	AF	UGLK1208	$525.00
		1¼"	NPT	-	No	221	AM	UGLK1208	$525.00
						236	SV	UGVL	PG # 18-10
					Yes	110	NF	UGLK1208	$525.00
						221	AF	UGLK1208	$525.00
						236	SVK	UGVL	PG # 18-11
		1½"	NPT	-	No	153	AM	UGLK1208	$525.00
						250	GM	UGLK1208	$525.00
					Yes	77	NF	UGLK1208	$525.00
						153	AF	UGLK1208	$525.00
						250	GK	UGLK1208	$525.00
		2"	NPT	-	No	85	SV	UGVL	PG # 18-10
						86	AM	UGLK1208	$525.00
						173	GM	UGLK1208	$525.00
					Yes	43	NF	UGLK1208	$525.00
						85	SVK	UGVL	PG # 18-11
						86	AF	UGLK1208	$525.00
						173	GK	UGLK1208	$525.00
	3-way	½"	NPT	-	No	250	AM	UGLK1208	$525.00
							LV	UGVL	PG # 18-11
					Yes	250	LVK	UGVL	PG # 18-11
							NF	UGLK1208	$525.00
		¾"	NPT	-	No	211	LV	UGVL	PG # 18-11
						250	AM	UGLK1208	$525.00
					Yes	211	LVK	UGVL	PG # 18-11
						250	NF	UGLK1208	$525.00
		1"	NPT	-	No	92	LV	UGVL	PG # 18-11
						250	AM	UGLK1208	$525.00
							SV	UGVL	PG # 18-10
					Yes	92	LVK	UGVL	PG # 18-11
						173	NF	UGLK1208	$525.00
						250	SVK	UGVL	PG # 18-11
						250	AF	UGLK1208	$525.00
		1¼"	NPT	-	No	221	AM	UGLK1208	$525.00
						236	SV	UGVL	PG # 18-10
					Yes	110	NF	UGLK1208	$525.00
						221	AF	UGLK1208	$525.00
						236	SVK	UGVL	PG # 18-11

All close-off pressures listed are approximate and based on valve condition and application.

067001- 04/13 - Subject to change. © Belimo Aircontrols (USA), Inc.

Valve Body Model	Valve Configuration	Size	Body Type	Flow	Fail-Safe	Close-Off psi	Belimo Actuator Series	Belimo Linkage	Linkage List Price
599 Flowrite	3-way	1½"	NPT	-	No	153	AM	UGLK1208	$525.00
						250	GM	UGLK1208	$525.00
					Yes	77	NF	UGLK1208	$525.00
						153	AF	UGLK1208	$525.00
						250	GK	UGLK1208	$525.00
		2"	NPT	-	No	85	SV	UGVL	PG # 18-10
						86	AM	UGLK1208	$525.00
						173	GM	UGLK1208	$525.00
					Yes	43	NF	UGLK1208	$525.00
						85	SVK	UGVL	PG # 18-11
						86	AF	UGLK1208	$525.00
						173	GK	UGLK1208	$525.00
656 Series	2-way	½"	NPT	-	No	250	AM	UGLK1214	$525.00
							LM	UGLK1350	$350.00
					Yes	250	LF	UGLK1350	$350.00
							NF	UGLK1214	$525.00
		¾"	NPT	-	No	215	LM	UGLK1350	$350.00
						250	NM	UGLK1350	$350.00
					Yes	215	LF	UGLK1350	$350.00
						250	NF	UGLK1214	$525.00
	3-way	½"	NPT	-	No	250	AM	UGLK1214	$525.00
							LM	UGLK1350	$350.00
					Yes	250	LF	UGLK1350	$350.00
							NF	UGLK1214	$525.00
		¾"	NPT	-	No	215	LM	UGLK1350	$350.00
						250	NM	UGLK1350	$350.00
					Yes	215	LF	UGLK1350	$350.00
						250	NF	UGLK1214	$525.00
658 Series	2-way	½"	NPT	-	No	250	AM	UGLK1214	$525.00
							LM	UGLK1350	$350.00
							LV	UGVL	PG # 18-11
					Yes	250	LF	UGLK1350	$350.00
							LVK	UGVL	PG # 18-11
							NF	UGLK1214	$525.00
		¾"	NPT	-	No	211	LV	UGVL	PG # 18-11
						215	LM	UGLK1350	$350.00
						250	NM	UGLK1350	$350.00
					Yes	211	LVK	UGVL	PG # 18-11
						215	LF	UGLK1350	$350.00
						250	NF	UGLK1214	$525.00
		1"	NPT	-	No	92	LV	UGVL	PG # 18-11
						120	LM	UGLK1350	$350.00
						244	NM	UGLK1350	$350.00
						250	AM	UGLK1214	$525.00
							SV	UGVL	PG # 18-10
					Yes	92	LVK	UGVL	PG # 18-11
						95	LF	UGLK1350	$350.00
						244	NF	UGLK1214	$525.00
						250	SVK	UGVL	PG # 18-11
						250	AF	UGLK1214	$525.00
		1¼"	NPT	-	No	78	LM	UGLK1350	$350.00
						156	NM	UGLK1350	$350.00
						236	SV	UGVL	PG # 18-10
						250	AM	UGLK1214	$525.00
					Yes	61	LF	UGLK1350	$350.00
						156	NF	UGLK1214	$525.00
						236	SVK	UGVL	PG # 18-11
						250	AF	UGLK1214	$525.00
	3-way	½"	NPT	-	No	250	AM	UGLK1214	$525.00
							LM	UGLK1350	$350.00
							LV	UGVL	PG # 18-11
					Yes	250	LF	UGLK1350	$350.00
							LVK	UGVL	PG # 18-11
							NF	UGLK1214	$525.00
		¾"	NPT	-	No	211	LV	UGVL	PG # 18-11
						215	LM	UGLK1350	$350.00
						250	NM	UGLK1350	$350.00

All close-off pressures listed are approximate and based on valve condition and application.

067001 - 04/13 - Subject to change. © Belimo Aircontrols (USA), Inc.

Siemens\Landis\Powers

658, 599 Powermite Series Valves

Linkage/Actuator Selection Guide

Valve Body Model	Valve Configuration	Size	Body Type	Flow	Fail-Safe	Close-Off psi	Belimo Actuator Series	Belimo Linkage	Linkage List Price
658 Series	3-way	¾"	NPT	-	Yes	211	LVK	UGVL	PG # 18-11
						215	LF	UGLK1350	$350.00
						250	NF	UGLK1214	$525.00
		1"	NPT	-	No	92	LV	UGVL	PG # 18-11
						120	LM	UGLK1350	$350.00
						244	NM	UGLK1350	$350.00
						250	AM	UGLK1214	$525.00
							SV	UGVL	PG # 18-10
					Yes	92	LVK	UGVL	PG # 18-11
						95	LF	UGLK1350	$350.00
						244	NF	UGLK1214	$525.00
						250	SVK	UGVL	PG # 18-11
						250	AF	UGLK1214	$525.00
		1¼"	NPT	-	No	78	LM	UGLK1350	$350.00
						156	NM	UGLK1350	$350.00
						236	SV	UGVL	PG # 18-10
						250	AM	UGLK1214	$525.00
					Yes	61	LF	UGLK1350	$350.00
						156	NF	UGLK1214	$525.00
						236	SVK	UGVL	PG # 18-11
						250	AF	UGLK1214	$525.00
599-01100 MZ (Cv <.4)	2-way	½"	NPT	-	No	70	CM	UGSL1200	$118.00
					Yes	70	TF	UGSL1200	$118.00
599-01102 MZ (Cv <.63)	2-way	½"	NPT	-	No	70	CM	UGSL1200	$118.00
					Yes	70	TF	UGSL1200	$118.00
599-01104 MZ (Cv <1)	2-way	½"	NPT	-	No	70	CM	UGSL1200	$118.00
					Yes	70	TF	UGSL1200	$118.00
599-01106 MZ (Cv <1.6)	2-way	½"	NPT	-	No	70	CM	UGSL1200	$118.00
					Yes	70	TF	UGSL1200	$118.00
599-01108 MZ (Cv <2.5)	2-way	½"	NPT	-	No	40	CM	UGSL1200	$118.00
					Yes	40	TF	UGSL1200	$118.00
599-01110 MZ (Cv <4)	2-way	½"	NPT	-	No	40	CM	UGSL1200	$118.00
					Yes	40	TF	UGSL1200	$118.00
599-01115 MZ (Cv <.4)	2-way	½"	NPT	-	No	60	CM	UGSL1200	$118.00
					Yes	60	TF	UGSL1200	$118.00
599-01117 MZ (Cv <.63)	2-way	½"	NPT	-	No	60	CM	UGSL1200	$118.00
					Yes	60	TF	UGSL1200	$118.00
599-01119 MZ (Cv <1)	2-way	½"	NPT	-	No	60	CM	UGSL1200	$118.00
					Yes	60	TF	UGSL1200	$118.00
599-01121 MZ (Cv <1.6)	2-way	½"	NPT	-	No	60	CM	UGSL1200	$118.00
					Yes	60	TF	UGSL1200	$118.00
599-01123 MZ (Cv <2.5)	2-way	½"	NPT	-	No	35	CM	UGSL1200	$118.00
					Yes	35	TF	UGSL1200	$118.00
599-01126 MZ (Cv <4)	2-way	½"	NPT	-	No	35	CM	UGSL1200	$118.00
					Yes	35	TF	UGSL1200	$118.00
599-01132 MZ (Cv <.4)	3-way	½"	NPT	-	No	70	CM	UGSL1200	$118.00
					Yes	70	TF	UGSL1200	$118.00
599-01133 MZ (Cv <.63)	3-way	½"	NPT	-	No	70	CM	UGSL1200	$118.00
					Yes	70	TF	UGSL1200	$118.00
599-01134 MZ (Cv <1)	3-way	½"	NPT	-	No	70	CM	UGSL1200	$118.00
					Yes	70	TF	UGSL1200	$118.00
599-01135 MZ (Cv <1.6)	3-way	½"	NPT	-	No	70	CM	UGSL1200	$118.00
					Yes	70	TF	UGSL1200	$118.00
599-01136 MZ (Cv <2.5)	3-way	½"	NPT	-	No	40	CM	UGSL1200	$118.00
					Yes	40	TF	UGSL1200	$118.00
599-01137 MZ (Cv <4)	3-way	½"	NPT	-	No	40	CM	UGSL1200	$118.00
					Yes	40	TF	UGSL1200	$118.00
599-02000 MT (Cv <.4)	2-way	½"	NPT	-	No	95	CM	UGSL1200	$118.00
					Yes	95	TF	UGSL1200	$118.00
599-02002 MT (Cv <.63)	2-way	½"	NPT	-	No	95	CM	UGSL1200	$118.00
					Yes	95	TF	UGSL1200	$118.00
599-02004 MT (Cv <1)	2-way	½"	NPT	-	No	95	CM	UGSL1200	$118.00
					Yes	95	TF	UGSL1200	$118.00
599-02006 MT (Cv <1.6)	2-way	½"	NPT	-	No	95	CM	UGSL1200	$118.00
					Yes	95	TF	UGSL1200	$118.00

All close-off pressures listed are approximate and based on valve condition and application.

067001- 04/13 - Subject to change. © Belimo Aircontrols (USA), Inc.

Valve Body Model	Valve Configuration	Size	Body Type	Flow	Fail-Safe	Close-Off psi	Belimo Actuator Series	Belimo Linkage	Linkage List Price
599-02008 MT (Cv <2.5)	2-way	½"	NPT	-	No	50	CM	UGSL1200	$118.00
					Yes	50	TF	UGSL1200	$118.00
599-02010 MT (Cv <4)	2-way	½"	NPT	-	No	50	CM	UGSL1200	$118.00
					Yes	50	TF	UGSL1200	$118.00
599-02030 MT (Cv <.4)	2-way	½"	NPT	-	No	120	CM	UGSL1200	$118.00
					Yes	120	TF	UGSL1200	$118.00
599-02032 MT (Cv <.63)	2-way	½"	NPT	-	No	120	CM	UGSL1200	$118.00
					Yes	120	TF	UGSL1200	$118.00
599-02034 MT (Cv <1)	2-way	½"	NPT	-	No	120	CM	UGSL1200	$118.00
					Yes	120	TF	UGSL1200	$118.00
599-02036 MT (Cv <1.6)	2-way	½"	NPT	-	No	120	CM	UGSL1200	$118.00
					Yes	120	TF	UGSL1200	$118.00
599-02038 MT (Cv <2.5)	2-way	½"	NPT	-	No	65	CM	UGSL1200	$118.00
					Yes	65	TF	UGSL1200	$118.00
599-02041 MT (Cv <4)	2-way	½"	NPT	-	No	65	CM	UGSL1200	$118.00
					Yes	65	TF	UGSL1200	$118.00
599-02064 MT (Cv <.4)	3-way	½"	NPT	-	No	95	CM	UGSL1200	$118.00
					Yes	95	TF	UGSL1200	$118.00
599-02065 MT (Cv <.63)	3-way	½"	NPT	-	No	95	CM	UGSL1200	$118.00
					Yes	95	TF	UGSL1200	$118.00
599-02066 MT (Cv <1)	3-way	½"	NPT	-	No	95	CM	UGSL1200	$118.00
					Yes	95	TF	UGSL1200	$118.00
599-02067 MT (Cv <1.6)	3-way	½"	NPT	-	No	95	CM	UGSL1200	$118.00
					Yes	95	TF	UGSL1200	$118.00
599-02068 MT (Cv <2.5)	3-way	½"	NPT	-	No	50	CM	UGSL1200	$118.00
					Yes	50	TF	UGSL1200	$118.00
599-02069 MT (Cv <4)	3-way	½"	NPT	-	No	50	CM	UGSL1200	$118.00
					Yes	50	TF	UGSL1200	$118.00
599-02070 MT (Cv <6.3)	3-way	¾"	NPT	-	No	40	CM	UGSL1200	$118.00
					Yes	40	TF	UGSL1200	$118.00
599-01129 MZ (Cv <6.3)	2-way	¾"	NPT	-	No	30	CM	UGSL1200	$118.00
					Yes	30	TF	UGSL1200	$118.00
599-01138 MZ (Cv <6.3)	3-way	¾"	NPT	-	No	10	CM	UGSL1200	$118.00
					Yes	10	TF	UGSL1200	$118.00
599-02012 MT (Cv <6.3)	2-way	¾"	NPT	-	No	40	CM	UGSL1200	$118.00
					Yes	40	TF	UGSL1200	$118.00
599-01112 MZ (Cv <6.3)	2-way	¾"	NPT	-	No	30	CM	UGSL1200	$118.00
					Yes	30	TF	UGSL1200	$118.00
599-02044 MT (Cv <6.3)	2-way	¾"	NPT	-	No	55	CM	UGSL1200	$118.00
					Yes	55	TF	UGSL1200	$118.00
599-01131 MZ (Cv <10)	2-way	1"	NPT	-	No	30	CM	UGSL1200	$118.00
					Yes	30	TF	UGSL1200	$118.00
599-01114 MZ (Cv <10)	2-way	1"	NPT	-	No	30	CM	UGSL1200	$118.00
					Yes	30	TF	UGSL1200	$118.00
599-01139 MZ (Cv <10)	3-way	1"	NPT	-	No	10	CM	UGSL1200	$118.00
					Yes	10	TF	UGSL1200	$118.00
599-02071 MT (Cv <10)	3-way	1"	NPT	-	No	40	CM	UGSL1200	$118.00
					Yes	40	TF	UGSL1200	$118.00
599-02046 MT (Cv <10)	2-way	1"	NPT	-	No	55	CM	UGSL1200	$118.00
					Yes	55	TF	UGSL1200	$118.00
599-02014 MT (Cv <10)	2-way	1"	NPT	-	No	40	CM	UGSL1200	$118.00
					Yes	40	TF	UGSL1200	$118.00
599 MZ (Cv 16)	2-way	1¼"	NPT	-	No	20	CM	UGSL1200	$118.00
					Yes	20	TF	UGSL1200	$118.00
	3-way	1¼"	NPT	-	No	10	CM	UGSL1200	$118.00
					Yes	10	TF	UGSL1200	$118.00
599-02084 MT (Cv <10)	2-way	1¼"	NPT	-	No	20	CM	UGSL1200	$118.00
					Yes	20	TF	UGSL1200	$118.00
599-02085 MT (Cv <10)	2-way	1¼"	NPT	-	No	21	CM	UGSL1200	$118.00
					Yes	20	TF	UGSL1200	$118.00
599-02086 MT (Cv <16)	3-way	1¼"	NPT	-	No	10	CM	UGSL1200	$118.00
					Yes	10	TF	UGSL1200	$118.00
599 MZ (Cv 25)	2-way	1½"	NPT	-	No	10	CM	UGSL1200	$118.00
					Yes	10	TF	UGSL1200	$118.00

All close-off pressures listed are approximate and based on valve condition and application.

067001 - 04/13 - Subject to change. © Belimo Aircontrols (USA), Inc.

Warren Controls

Type 20, Type 22, Type 23, Type 30, Type 32, 100 Series Valves

Linkage/Actuator Selection Guide

5 YEAR WARRANTY

Valve Body Model	Valve Configuration	Size	Body Type	Flow	Fail-Safe	Close-Off psi	Belimo Actuator Series	Belimo Linkage	Linkage List Price
Type 20	2-way	2½"	Flanged	-	No	94	EV	WGVL	PG # 18-10
						185	RV	WGVL	PG # 18-10
					Yes	71	AVK	WGVL	PG # 18-11
		3"	Flanged	-	No	63	EV	WGVL	PG # 18-10
						126	RV	WGVL	PG # 18-10
					Yes	47	AVK	WGVL	PG # 18-11
		4"	Flanged	-	No	68	RV	WGVL	PG # 18-10
		5"	Flanged	-	No	42	RV	WGVL	PG # 18-10
Type 22	2-way	2½"	Flanged	-	No	94	EV	WGVL	PG # 18-10
						185	RV	WGVL	PG # 18-10
					Yes	71	AVK	WGVL	PG # 18-11
		3"	Flanged	-	No	63	EV	WGVL	PG # 18-10
						126	RV	WGVL	PG # 18-10
					Yes	47	AVK	WGVL	PG # 18-11
		4"	Flanged	-	No	68	RV	WGVL	PG # 18-10
		5"	Flanged	-	No	42	RV	WGVL	PG # 18-10
Type 23	2-way	2½"	Flanged	-	No	228	EV	WGVL	PG # 18-10
					Yes	228	AVK	WGVL	PG # 18-11
		3"	Flanged	-	No	157	EV	WGVL	PG # 18-10
					Yes	157	AVK	WGVL	PG # 18-11
		4"	Flanged	-	No	340	EV	WGVL	PG # 18-10
					Yes	340	AVK	WGVL	PG # 18-11
		5"	Flanged	-	No	232	EV	WGVL	PG # 18-10
					Yes	232	AVK	WGVL	PG # 18-11
Type 30	3-way	2½"	Flanged	-	No	94	EV	WGVL	PG # 18-10
						185	RV	WGVL	PG # 18-10
					Yes	71	AVK	WGVL	PG # 18-11
		3"	Flanged	-	No	63	EV	WGVL	PG # 18-10
						126	RV	WGVL	PG # 18-10
					Yes	47	AVK	WGVL	PG # 18-11
		4"	Flanged	-	No	68	RV	WGVL	PG # 18-10
		5"	Flanged	-	No	42	RV	WGVL	PG # 18-10
Type 32	3-way	2½"	Flanged	-	No	94	EV	WGVL	PG # 18-10
						185	RV	WGVL	PG # 18-10
					Yes	71	AVK	WGVL	PG # 18-11
		3"	Flanged	-	No	63	EV	WGVL	PG # 18-10
						126	RV	WGVL	PG # 18-10
					Yes	47	AVK	WGVL	PG # 18-11
		4"	Flanged	-	No	68	RV	WGVL	PG # 18-10
		5"	Flanged	-	No	42	RV	WGVL	PG # 18-10
100 SGL SEAT	2-way	2½"	Flanged	-	No	28	AM	UGLK2202	$538.00
						57	GM	UGLK2202	$538.00
						101	2*GM	UGLK2272	$725.00
					Yes	14	NF	UGLK2202	$538.00
						28	AF	UGLK2202	$538.00
						57	2*AF	UGLK2272	$725.00
							GK	UGLK2202	$538.00
						101	2*GK	UGLK2272	$725.00
		3"	Flanged	-	No	40	GM	UGLK2202	$538.00
						20	AM	UGLK2202	$538.00
						70	2*GM	UGLK2272	$725.00
					Yes	40	2*AF	UGLK2272	$725.00
							GK	UGLK2202	$538.00
						10	NF	UGLK2202	$538.00
						20	AF	UGLK2202	$538.00
						70	2*GK	UGLK2272	$725.00
		4"	Flanged	-	No	11	AM	UGLK2202	$538.00
						22	GM	UGLK2202	$538.00
						40	2*GM	UGLK2272	$725.00
					Yes	11	AF	UGLK2202	$538.00
						22	2*AF	UGLK2272	$725.00
							GK	UGLK2202	$538.00
						40	2*GK	UGLK2272	$725.00
		5"	Flanged	-	No	14	GM	UGLK2202	$538.00
						25	2*GM	UGLK2272	$725.00

All close-off pressures listed are approximate and based on valve condition and application.

067001- 04/13 - Subject to change. © Belimo Aircontrols (USA), Inc.

Valve Body Model	Valve Configuration	Size	Body Type	Flow	Fail-Safe	Close-Off psi	Belimo Actuator Series	Belimo Linkage	Linkage List Price
100 SGL SEAT	2-way	5”	Flanged	-	Yes	7	AF	UGLK2202	$538.00
						14	2*AF	UGLK2272	$725.00
							GK	UGLK2202	$538.00
						25	2*GK	UGLK2272	$725.00
		6”	Flanged	-	No	10	GM	UGLK2202	$538.00
						18	2*GM	UGLK2272	$725.00
					Yes	5	AF	UGLK2202	$538.00
						10	2*AF	UGLK2272	$725.00
							GK	UGLK2202	$538.00
						18	2*GK	UGLK2272	$725.00
1800 3W DIV	3-way	2½”	Flanged	Diverting	No	28	AM	UGLK2202	$538.00
						57	GM	UGLK2202	$538.00
						101	2*GM	UGLK2272	$725.00
					Yes	14	NF	UGLK2202	$538.00
						28	AF	UGLK2202	$538.00
						57	2*AF	UGLK2272	$725.00
							GK	UGLK2202	$538.00
						101	2*GK	UGLK2272	$725.00
		3”	Flanged	Diverting	No	40	GM	UGLK2202	$538.00
						20	AM	UGLK2202	$538.00
						70	2*GM	UGLK2272	$725.00
					Yes	40	2*AF	UGLK2272	$725.00
							GK	UGLK2202	$538.00
						10	NF	UGLK2202	$538.00
						20	AF	UGLK2202	$538.00
						70	2*GK	UGLK2272	$725.00
		4”	Flanged	Diverting	No	11	AM	UGLK2202	$538.00
						22	GM	UGLK2202	$538.00
						40	2*GM	UGLK2272	$725.00
					Yes	11	AF	UGLK2202	$538.00
						22	2*AF	UGLK2272	$725.00
							GK	UGLK2202	$538.00
						40	2*GK	UGLK2272	$725.00
		5”	Flanged	Diverting	No	14	GM	UGLK2202	$538.00
						25	2*GM	UGLK2272	$725.00
					Yes	7	AF	UGLK2202	$538.00
						14	2*AF	UGLK2272	$725.00
							GK	UGLK2202	$538.00
						25	2*GK	UGLK2272	$725.00
		6”	Flanged	Diverting	No	10	GM	UGLK2202	$538.00
						18	2*GM	UGLK2272	$725.00
					Yes	5	AF	UGLK2202	$538.00
						10	2*AF	UGLK2272	$725.00
							GK	UGLK2202	$538.00
						18	2*GK	UGLK2272	$725.00
1800 3W MIX	3-way	2½”	Flanged	Mixing	No	28	AM	UGLK2202	$538.00
						57	GM	UGLK2202	$538.00
						101	2*GM	UGLK2272	$725.00
					Yes	14	NF	UGLK2202	$538.00
						28	AF	UGLK2202	$538.00
						57	2*AF	UGLK2272	$725.00
							GK	UGLK2202	$538.00
						101	2*GK	UGLK2272	$725.00
		3”	Flanged	Mixing	No	40	GM	UGLK2202	$538.00
						20	AM	UGLK2202	$538.00
						70	2*GM	UGLK2272	$725.00
					Yes	40	2*AF	UGLK2272	$725.00
							GK	UGLK2202	$538.00
						10	NF	UGLK2202	$538.00
						20	AF	UGLK2202	$538.00
						70	2*GK	UGLK2272	$725.00
		4”	Flanged	Mixing	No	11	AM	UGLK2202	$538.00
						22	GM	UGLK2202	$538.00
						40	2*GM	UGLK2272	$725.00

All close-off pressures listed are approximate and based on valve condition and application.

067001 - 04/13 - Subject to change. © Belimo Aircontrols (USA), Inc.

Warren Controls

1800 M, 1800 BAL, Type 20 Series Valves

Linkage/Actuator Selection Guide

5 YEAR WARRANTY

Valve Body Model	Valve Configuration	Size	Body Type	Flow	Fail-Safe	Close-Off psi	Belimo Actuator Series	Belimo Linkage	Linkage List Price
1800 3W MIX	3-way	4”	Flanged	Mixing	Yes	11	AF	UGLK2202	$538.00
						22	2*AF	UGLK2272	$725.00
							GK	UGLK2202	$538.00
						40	2*GK	UGLK2272	$725.00
		5”	Flanged	Mixing	No	14	GM	UGLK2202	$538.00
						25	2*GM	UGLK2272	$725.00
					Yes	7	AF	UGLK2202	$538.00
						14	2*AF	UGLK2272	$725.00
							GK	UGLK2202	$538.00
						25	2*GK	UGLK2272	$725.00
		6”	Flanged	Mixing	No	10	GM	UGLK2202	$538.00
						18	2*GM	UGLK2272	$725.00
					Yes	5	AF	UGLK2202	$538.00
						10	2*AF	UGLK2272	$725.00
							GK	UGLK2202	$538.00
						18	2*GK	UGLK2272	$725.00
1800 BAL	2-way	2½”	Flanged	-	No	28	AM	UGLK2202	$538.00
						57	GM	UGLK2202	$538.00
						101	2*GM	UGLK2272	$725.00
					Yes	14	NF	UGLK2202	$538.00
						28	AF	UGLK2202	$538.00
						57	2*AF	UGLK2272	$725.00
							GK	UGLK2202	$538.00
						101	2*GK	UGLK2272	$725.00
		3”	Flanged	-	No	40	GM	UGLK2202	$538.00
						20	AM	UGLK2202	$538.00
						70	2*GM	UGLK2272	$725.00
					Yes	40	2*AF	UGLK2272	$725.00
							GK	UGLK2202	$538.00
						10	NF	UGLK2202	$538.00
						20	AF	UGLK2202	$538.00
						70	2*GK	UGLK2272	$725.00
		4”	Flanged	-	No	11	AM	UGLK2202	$538.00
						22	GM	UGLK2202	$538.00
						40	2*GM	UGLK2272	$725.00
					Yes	11	AF	UGLK2202	$538.00
						22	2*AF	UGLK2272	$725.00
							GK	UGLK2202	$538.00
						40	2*GK	UGLK2272	$725.00
		5”	Flanged	-	No	14	GM	UGLK2202	$538.00
						25	2*GM	UGLK2272	$725.00
					Yes	7	AF	UGLK2202	$538.00
						14	2*AF	UGLK2272	$725.00
							GK	UGLK2202	$538.00
						25	2*GK	UGLK2272	$725.00
		6”	Flanged	-	No	10	GM	UGLK2202	$538.00
						18	2*GM	UGLK2272	$725.00
					Yes	5	AF	UGLK2202	$538.00
						10	2*AF	UGLK2272	$725.00
							GK	UGLK2202	$538.00
						18	2*GK	UGLK2272	$725.00
Type 20	2-way	2½”	Flanged	-	No	55	AM	UGLK2200	$538.00
						110	GM	UGLK2200	$538.00
						196	2*GM	UGLK2270	$725.00
					Yes	28	NF	UGLK2200	$538.00
						55	AF	UGLK2200	$538.00
						110	2*AF	UGLK2270	$725.00
							GK	UGLK2200	$538.00
						196	2*GK	UGLK2270	$725.00
		3”	Flanged	-	No	38	AM	UGLK2200	$538.00
						77	GM	UGLK2200	$538.00
						136	2*GM	UGLK2270	$725.00
					Yes	19	NF	UGLK2200	$538.00
						38	AF	UGLK2200	$538.00
						77	2*AF	UGLK2270	$725.00
							GK	UGLK2200	$538.00
						136	2*GK	UGLK2270	$725.00

All close-off pressures listed are approximate and based on valve condition and application.

067001- 04/13 - Subject to change. © Belimo Aircontrols (USA), Inc.

Valve Body Model	Valve Configuration	Size	Body Type	Flow	Fail-Safe	Close-Off psi	Belimo Actuator Series	Belimo Linkage	Linkage List Price
Type 20	2-way	4"	Flanged	-	No	11	AM	UGLK2202	$538.00
						22	GM	UGLK2202	$538.00
						40	2*GM	UGLK2272	$725.00
					Yes	11	AF	UGLK2202	$538.00
						22	2*AF	UGLK2272	$725.00
							GK	UGLK2202	$538.00
						40	2*GK	UGLK2272	$725.00
		5"	Flanged	-	No	14	GM	UGLK2202	$538.00
						25	2*GM	UGLK2272	$725.00
					Yes	7	AF	UGLK2202	$538.00
						14	2*AF	UGLK2272	$725.00
							GK	UGLK2202	$538.00
						25	2*GK	UGLK2272	$725.00
		6"	Flanged	-	No	10	GM	UGLK2202	$538.00
						18	2*GM	UGLK2272	$725.00
					Yes	5	AF	UGLK2202	$538.00
						10	2*AF	UGLK2272	$725.00
							GK	UGLK2202	$538.00
						18	2*GK	UGLK2272	$725.00
Type 22	2-way	2½"	Flanged	-	No	55	AM	UGLK2200	$538.00
						110	GM	UGLK2200	$538.00
						196	2*GM	UGLK2270	$725.00
					Yes	28	NF	UGLK2200	$538.00
						55	AF	UGLK2200	$538.00
						110	2*AF	UGLK2270	$725.00
							GK	UGLK2200	$538.00
						196	2*GK	UGLK2270	$725.00
		3"	Flanged	-	No	38	AM	UGLK2200	$538.00
						77	GM	UGLK2200	$538.00
						136	2*GM	UGLK2270	$725.00
					Yes	19	NF	UGLK2200	$538.00
						38	AF	UGLK2200	$538.00
						77	2*AF	UGLK2270	$725.00
							GK	UGLK2200	$538.00
						136	2*GK	UGLK2270	$725.00
		4"	Flanged	-	No	22	AM	UGLK2200	$538.00
						43	GM	UGLK2200	$538.00
						77	2*GM	UGLK2270	$725.00
					Yes	11	NF	UGLK2200	$538.00
						22	AF	UGLK2200	$538.00
						43	2*AF	UGLK2270	$725.00
							GK	UGLK2200	$538.00
						77	2*GK	UGLK2270	$725.00
		5"	Flanged	-	No	14	GM	UGLK2202	$538.00
						25	2*GM	UGLK2272	$725.00
					Yes	7	AF	UGLK2202	$538.00
						14	2*AF	UGLK2272	$725.00
							GK	UGLK2202	$538.00
						25	2*GK	UGLK2272	$725.00
		6"	Flanged	-	No	10	GM	UGLK2202	$538.00
						18	2*GM	UGLK2272	$725.00
					Yes	5	AF	UGLK2202	$538.00
						10	2*AF	UGLK2272	$725.00
							GK	UGLK2202	$538.00
						18	2*GK	UGLK2272	$725.00
Type 30	3-way	2½"	Flanged	-	No	55	AM	UGLK2200	$538.00
						110	GM	UGLK2200	$538.00
						196	2*GM	UGLK2270	$725.00
					Yes	28	NF	UGLK2200	$538.00
						55	AF	UGLK2200	$538.00
						110	2*AF	UGLK2270	$725.00
							GK	UGLK2200	$538.00
						196	2*GK	UGLK2270	$725.00
		3"	Flanged	-	No	38	AM	UGLK2200	$538.00
						77	GM	UGLK2200	$538.00
						136	2*GM	UGLK2270	$725.00

All close-off pressures listed are approximate and based on valve condition and application.

067001 - 04/13 - Subject to change. © Belimo Aircontrols (USA), Inc.

Warren Controls

Type 30, Type 32, Type 20 Series Valves

Linkage/Actuator Selection Guide

5 YEAR WARRANTY

Valve Body Model	Valve Configuration	Size	Body Type	Flow	Fail-Safe	Close-Off psi	Belimo Actuator Series	Belimo Linkage	Linkage List Price
Type 30	3-way	3”	Flanged	-	Yes	19	NF	UGLK2200	$538.00
						38	AF	UGLK2200	$538.00
						77	2*AF	UGLK2270	$725.00
							GK	UGLK2200	$538.00
						136	2*GK	UGLK2270	$725.00
		4”	Flanged	-	No	11	AM	UGLK2202	$538.00
						22	GM	UGLK2202	$538.00
						40	2*GM	UGLK2272	$725.00
					Yes	11	AF	UGLK2202	$538.00
						22	2*AF	UGLK2272	$725.00
							GK	UGLK2202	$538.00
						40	2*GK	UGLK2272	$725.00
		5”	Flanged	-	No	14	GM	UGLK2202	$538.00
						25	2*GM	UGLK2272	$725.00
					Yes	7	AF	UGLK2202	$538.00
						14	2*AF	UGLK2272	$725.00
							GK	UGLK2202	$538.00
						25	2*GK	UGLK2272	$725.00
		6”	Flanged	-	No	10	GM	UGLK2202	$538.00
						18	2*GM	UGLK2272	$725.00
					Yes	5	AF	UGLK2202	$538.00
						10	2*AF	UGLK2272	$725.00
							GK	UGLK2202	$538.00
						18	2*GK	UGLK2272	$725.00
Type 32	3-way	2½”	Flanged	-	No	55	AM	UGLK2200	$538.00
						110	GM	UGLK2200	$538.00
						196	2*GM	UGLK2270	$725.00
					Yes	28	NF	UGLK2200	$538.00
						55	AF	UGLK2200	$538.00
						110	2*AF	UGLK2270	$725.00
							GK	UGLK2200	$538.00
						196	2*GK	UGLK2270	$725.00
		3”	Flanged	-	No	38	AM	UGLK2200	$538.00
						77	GM	UGLK2200	$538.00
						136	2*GM	UGLK2270	$725.00
					Yes	19	NF	UGLK2200	$538.00
						38	AF	UGLK2200	$538.00
						77	2*AF	UGLK2270	$725.00
							GK	UGLK2200	$538.00
						136	2*GK	UGLK2270	$725.00
		4”	Flanged	-	No	11	AM	UGLK2202	$538.00
						22	GM	UGLK2202	$538.00
						40	2*GM	UGLK2272	$725.00
					Yes	11	AF	UGLK2202	$538.00
						22	2*AF	UGLK2272	$725.00
							GK	UGLK2202	$538.00
						40	2*GK	UGLK2272	$725.00
		5”	Flanged	-	No	14	GM	UGLK2202	$538.00
						25	2*GM	UGLK2272	$725.00
					Yes	7	AF	UGLK2202	$538.00
						14	2*AF	UGLK2272	$725.00
							GK	UGLK2202	$538.00
						25	2*GK	UGLK2272	$725.00
		6”	Flanged	-	No	10	GM	UGLK2202	$538.00
						18	2*GM	UGLK2272	$725.00
					Yes	5	AF	UGLK2202	$538.00
						10	2*AF	UGLK2272	$725.00
							GK	UGLK2202	$538.00
						18	2*GK	UGLK2272	$725.00
Type 20	2-way	½”	NPT	-	No	250	AM	UGLK2200	$538.00
					Yes	250	NF	UGLK2200	$538.00
		¾”	NPT	-	No	250	AM	UGLK2200	$538.00
					Yes	250	NF	UGLK2200	$538.00
		1”	NPT	-	No	250	AM	UGLK2200	$538.00
					Yes	173	NF	UGLK2200	$538.00
						250	AF	UGLK2200	$538.00

All close-off pressures listed are approximate and based on valve condition and application.

067001- 04/13 - Subject to change. © Belimo Aircontrols (USA), Inc.

Valve Body Model	Valve Configuration	Size	Body Type	Flow	Fail-Safe	Close-Off psi	Belimo Actuator Series	Belimo Linkage	Linkage List Price
Type 20	2-way	1¼"	NPT	-	No	221	AM	UGLK2200	$538.00
					Yes	110	NF	UGLK2200	$538.00
						221	AF	UGLK2200	$538.00
		1½"	NPT	-	No	153	AM	UGLK2200	$538.00
						250	GM	UGLK2200	$538.00
					Yes	77	NF	UGLK2200	$538.00
						153	AF	UGLK2200	$538.00
						250	GK	UGLK2200	$538.00
		2"	NPT	-	No	86	AM	UGLK2200	$538.00
						173	GM	UGLK2200	$538.00
					Yes	43	NF	UGLK2200	$538.00
						86	AF	UGLK2200	$538.00
						173	GK	UGLK2200	$538.00
Type 30	3-way	½"	NPT	-	No	250	AM	UGLK2200	$538.00
					Yes	250	NF	UGLK2200	$538.00
		¾"	NPT	-	No	250	AM	UGLK2200	$538.00
					Yes	250	NF	UGLK2200	$538.00
		1"	NPT	-	No	250	AM	UGLK2200	$538.00
					Yes	173	NF	UGLK2200	$538.00
						250	AF	UGLK2200	$538.00
		1¼"	NPT	-	No	221	AM	UGLK2200	$538.00
					Yes	110	NF	UGLK2200	$538.00
						221	AF	UGLK2200	$538.00
		1½"	NPT	-	No	153	AM	UGLK2200	$538.00
						250	GM	UGLK2200	$538.00
					Yes	77	NF	UGLK2200	$538.00
						153	AF	UGLK2200	$538.00
						250	GK	UGLK2200	$538.00
		2"	NPT	-	No	86	AM	UGLK2200	$538.00
						173	GM	UGLK2200	$538.00
					Yes	43	NF	UGLK2200	$538.00
						86	AF	UGLK2200	$538.00
						173	GK	UGLK2200	$538.00

All close-off pressures listed are approximate and based on valve condition and application.

067001 - 04/13 - Subject to change. © Belimo Aircontrols (USA), Inc.

Where globe valves which cannot be matched to one of the Belimo UGLK part numbers, for quotation and order entry purposes, please use p/n UGSP0000 for valves requiring single actuation, and UGSP0002 for valves requiring dual actuation. These part numbers have no Bill of Materials (BOM) associated with them, and therefore cannot be produced and shipped. When these two part numbers are quoted, sold and orders processed, the "Globe Valve Retrofit" form must be completed and will accompany the order. Our engineering department will then determine the correct UGSP linkage number for production. Please keep in mind that UGSP0000 and UGSP0002 will **NOT** show up on final paperwork and will be replaced with the correct UGSP part number once such has been determined.

UGSP0000

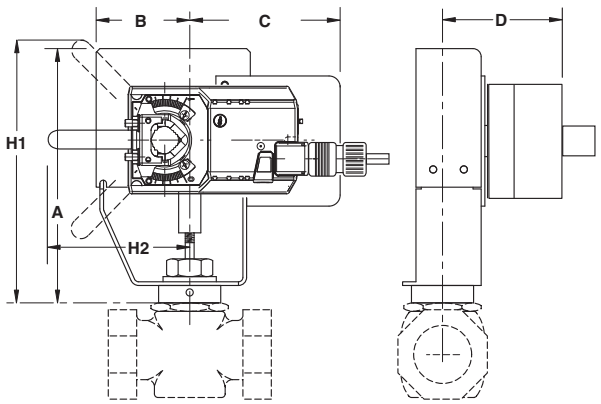

The single actuated globe retrofit linkage (shown left) depicts the MINIMUM and MAXIMUM dimensional data for use in determining the space required to mount the linkage. These dimensions do NOT include VALVE dimensions which will affect combined height requirements.

Dims H1 & **H2** are used only when override handles are utilized on the linkage system, and are not required for proper operation of the linkage system.

Dim A	7.5" [190] to 14" [356]	**Dim H1**	9.5" [242]
Dim B	3" [76]	**Dim H2**	9.5" [242]
Dim C	9" [229]		
Dim D	5" [127]		

List Price for UGSP0000 $705.00

UGSP0002

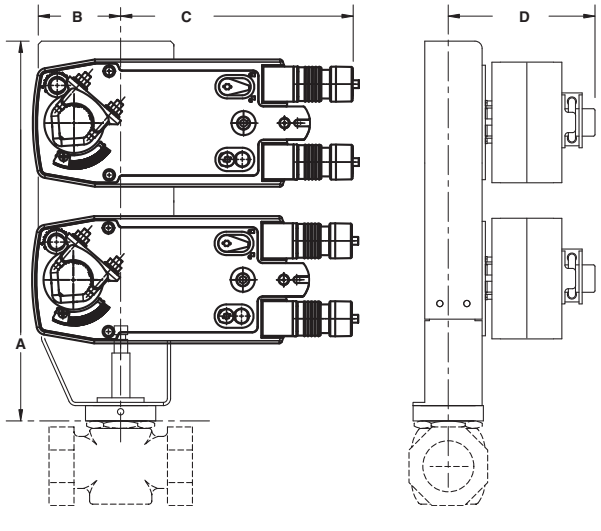

The dual MINIMUM and MAXIMUM actuated globe retrofit linkage shown left depicts the MAXIMUM dimensional data for use in determining the space required to mount the linkage. These dimensions do NOT include VALVE dimensions which will affect combined height requirements.

Dim A	9.5" [241] to 19" [483]
Dim B	3" [76]
Dim C	9" [229]
Dim D	5" [127]

List Price for UGSP0002 $1,020.00

5 YEAR WARRANTY

067001 - 04/13 - Subject to change. © Belimo Aircontrols (USA), Inc.

Custom kits are designed to your unique specification and are not returnable.

Instructions for Completing this Form

Dimensions A, B & C relate to the existing valve stem. **Dim A** is the stem diameter where it is NOT threaded (Style A), or grooved (Style B). **Dim B** refers to the length of the threaded region on the valve stem or top region of the grooved stem. **Dim C** is the actual thread specification for the threaded style stem (1/4-28, 5/16-24, 3/8-24, 7/16-20 & 1/2-20 are typical). Dim C for the grooved style is the measurement of the stem groove height. This information is used to design a stem adapter which will connect the valve stem to the new linkage drive rack. It is important to specify the correct thread pattern, as incorrect data will prevent the stem adapter from attaching to your valve. If you cannot determine the correct thread spec, you can send a nut from the valve stem and we will match the correct specification. In some cases where older valves are concerned, some valve stems must be trimmed in the field to allow attachment of the linkage system. In these cases, a stem adapter is designed to "bite" into the smooth surface of the valve stem itself.

Dimensions D1, D2 & D3 are used to determine the height of the linkage assembly required to clear the valves' full stroke. A minimum of **two** dimensions are required to manufacture the correct linkage system for your valve. These dimensions also provide the information necessary to determine valve stroke. The **maximum stroke** from Belimo globe valve retrofit systems is 1.500".

Dimension E refers to the valve bonnet diameter (regardless if threads are present or not). Over time, impurities will react to the bonnet threads and corrode them to the point where they no longer meet the original thread specification. Because of this, we manufacture **slip fit** collars designed to **slide over** the bonnet threads, and locking setscrews are provided which "bite" into the original threads. All retrofit systems are designed to work with the raw valve body and do not account for previous actuation components which **must** be removed from the valve body before attaching the new linkage system.

Dimension F refers to the thread specification on threaded bonnets, and refers to the minor diameter on slip on bonnets (Landis type). This information helps us determine the length of the locking devices required to hold the collar onto the bonnet.

Dimensions G & H are used to determine working height of the bonnet region of your globe valve, while **Dim I** is used in calculating the minimum ID of the collar that will fit over the packing nut. Additionally, information about the environment and process in which this linkage system will be utilized should be provided.

All the requested information contained on this form is required to guarantee the complete, perfect fit of your retrofit system. Keep in mind that retrofit kits are designed with close-tolerance components which afford the most efficient linkage systems. Measurements rounded to the nearest 1/8 or 1/16 inch will not perform as well as a kit designed around careful measurements using proper equipment. Our designs are typically +.005" tolerance.

Required Tools - calipers, thread gauge and retrofit form

DISCLAIMER:

We will do our best to provide a linkage system designed around your specifications and measurements however, we cannot be held responsible for linkages which do not fit as a result of incorrect data given to Belimo. We will re-work components which do not fit properly for a nominal fee.

To reduce the possibility of incorrect linkage solutions, we respectfully request that you fill out the retrofit form completely and forward that information with your order. This will serve as a double check between your valve and the actuator/linkage package designed for your application.

Actuation, weather shields and linkages cannot be pre-assembled at the Belimo factory prior to your receipt. The linkages are designed to be attached onto the valve body first, then optional weather shields, and finally actuation products.

Close-off pressures are calculated using actuator torque, valve stroke, and valve area. Other factors may affect the rated close-off pressures, including flow rates, system maintenance schedules, chemicals used in the shot feeder process, vicinity to pumps, condition of valve stem seals, and assembly of linkage material in the field.

Valves that are being considered for retrofit of actuation should be analyzed for their life expectancy before the retrofit has taken place. Valves that leak through stem seals or casings will continue to leak with the new linkage system in place, maybe even more so. Rebuilding the packing on these valves may be more costly than replacing the valves themselves. In some instances, older valve stem heights will require field modifications to the valve in order to utilize the retrofit kit. Belimo takes no responsibility for the operation of these valves after they have been modified.

067001 - 04/13 - Subject to change. © Belimo Aircontrols (USA), Inc.

Custom Globe Valve Retrofit Solution Form

UGSP Series

BELIMO

RETROFIT SOLUTIONS

VALVE STYLE 1

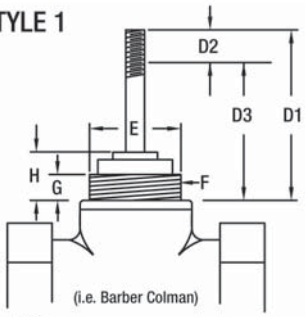

NOTE:
Nut "F" rotates on valve bonnet!!

VALVE STYLE 2

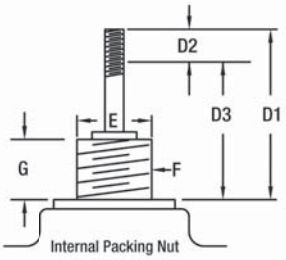

VALVE STYLE 3

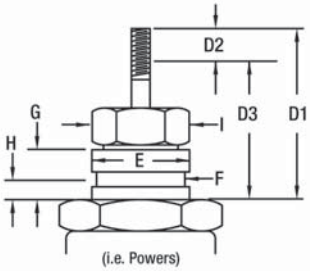

VALVE STYLE 4

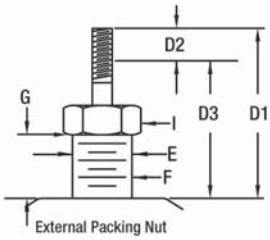

VALVE STYLE 5

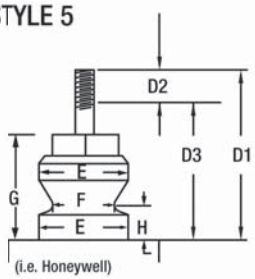

VALVE STYLE DIMENSIONS

VALVE STYLE:		
DIM D1*: Stem up, length to base mount surface		
DIM D2: Stem stroke, stem up vs. stem down (D1-D3)		max. 1.500"
DIM D3: Stem down, length to base mount surface		
DIM E: Bonnet major diameter		
DIM F: Thread spec or bonnet minor diameter		
DIM G: Bonnet mount height		
DIM H: Bonnet minor diameter height		
DIM I: External packaging nut, across points		

*MAXIMUM LENGTH LINKAGE FRAME WILL ACCOMODATE UP TO 6.500" D1 MEASUREMENT VALVE STEMS LONGER THAN THIS NEED TO BE CUT.

STEM STYLE A

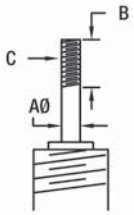

STEM STYLE B

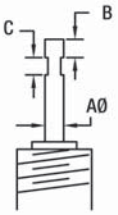

STEM STYLE A or B: ☐ | STEM DIAMETER DIM A: ☐ | THREAD LENGTH DIM B: ☐ | TO STEM GROOVE DIM B: ☐ | THREADS PER INCH DIM C: ☐ | STEM GROOVE HEIGHT DIM C: ☐

ACTUATOR

EXISTING ACTUATOR MODEL: _____ CONTROL TYPE: ☐ ON/OFF ☐ FLOATING POINT ☐ VDC Range:_____ ☐ PWM Range:_____

FAIL SAFE: ☐ YES ☐ NO

FAIL POSITION: ☐ NO ☐ NC ☐ INDOOR ☐ OUTDOOR

VOLTAGE _____

COMPANY: _____ VALVE MANUFACTURE: _____ 2 WAY/3 WAY: _____

JOB NAME: _____ VALVE SERIES: _____ VALVE SIZE: _____

PO#: _____ VALVE MODEL: _____ MEDIA TEMP: _____

PHONE: _____ VALVE TAG/LOCATION: _____ MEDIA TYPE: _____

EMAIL: _____ QUANTITY: _____ SYSTEM PRESSURE: _____

NOTE: THIS INFORMATION WILL BE UTILIZED IN THE FABRICATION OF A CUSTOM LINKAGE SYSTEM FOR YOUR VALVE REQUIREMENT; THEREFORE, IT IS ESSENTIAL THAT THE ABOVE DIMENSIONS BE FURNISHED WITH READINGS TAKEN TO THE NEAREST .001". ANY ERRONEOUS DIMENSIONS FURNISHED WHICH RESULT IN IMPROPER FIT OF THIS LINKAGE SYSTEM ARE NOT THE RESPONSIBILITY OF BELIMO AIRCONTROLS. ANY REWORK REQUIRED WILL RESULT IN AN EXTRA CHARGE.

CUSTOM KITS ARE DESIGNED TO YOUR UNIQUE SPECIFICATIONS AND ARE NOT RETURNABLE.

COMPANY CONTACT/DIMENSIONS PROVIDED BY: _____ DATE: _____

800-543-9038 USA | 866-805-7089 CANADA | 203-791-8396 LATIN AMERICA/CARIBBEAN

067001 - 04/13 - Subject to change. © Belimo Aircontrols (USA), Inc.

How to Select a Butterfly Valve Retrofit Solution

Follow the four steps listed below when ordering a butterfly valve retrofit kit.

Example: Centerline C200 Series, **2½"** valve, using a **Non-Spring Return** Belimo actuator.

1. Identify the **Valve Manufacturer, Valve Series** and **Valve Size.**
2. Determine the type of actuator you require: Belimo Spring Return, Non-Spring or SY Series Industrial. Belimo Spring and Non-Spring actuators are typically only available on smaller sizes.

   Look at the solution using the Non-Spring Return Belimo Actuator. Looking at the **UFLK3500,** the **GM** Series actuator will provide a **200 psi close-off** for the **2½" valve** with **Non-Spring Return** actuation.
3. Use the actuator listings to make your final actuator selection. Decide between **GMB24-3-X1** and **GMB24-MFT-X1.**

   ACTUATOR NOT INCLUDED IN THE LIST PRICE OF THE LINKAGE.
4. HOW TO ORDER: **Item 1 1pc UFLK3500**
   Item 2 1pc GMB24-MFT-X1

2 YEAR WARRANTY

RETROFIT SOLUTIONS

1 Select linkage solution based on the **Valve Number**, **Configuration**, and **Size**; select the proper **Linkage Solution** for your valve.

UFLK1300
Example: **Centerline C200 Series, 2½"** valve using a **non-spring return** Belimo actuation.

Choose correct linkage **UFLK3500**.

Centerline
C200 Round Top Series Butterfly Valves
Linkage/Actuator Selection Guide

Valve Body Model	Valve Configuration	Size	Failsafe	Close-Off psi	Belimo Actuator Series	Belimo Linkage
C200 Round Top Series Butterfly Valves	2-way	2"	No	200	AM	UFLK3500
					SY1	UFLK3538
					SY2	UFLK3540
			Yes	200	AF	UFLK3500
		2½"	No	200	GM	UFLK3500
					SY1	UFLK3538
					SY2	UFLK3540
			Yes	200	2*AF	UFLK3502
					GK	UFLK3500
		3"	No	200	GM	UFLK3500
					SY1	UFLK3538
					SY2	UFLK3540
			Yes	200	2*AF	UFLK3502
					GK	UFLK3500

2 Verify close-off is suitable for application. Looking at the **UFLK3500**, the **GM** Series actuator will provide **200 psi close-off** for the **2½" valve**.

Model	Non-Spring Return Actuators						
	Control Input	Feedback	Power Supply	Running Time(s) [Default]	VA Rating	Auxiliary Switch	Cable Length
BASIC PRODUCTS							
GMB24-3-X1	On/Off, Floating Point	Add-on	24 VAC/DC	150 seconds	6	Add-on	3 ft.
GMB24-SR	2-10 VDC (4-20 mA*)	2-10 VDC	24 VAC/DC	150 seconds	6.5	Add-on	3 ft.
GMB24-MFT-X1	2-10 VDC	2-10 VDC	24 VAC/DC	150 seconds	7	Add-on	3 ft.

♦ Variable with MFT
‡ Prices do not reflect additional programming code surcharge.
NOTE: 10' and 16' cables are available with a $28.00 and $48.00 adder except for the PC and MFT95 version, which are only available with a 3' cable.

3 Select actuator based on needed control type. Decide between **GMB24-3-X1** and **GMB24-MFT-X1**.

4 Complete Ordering Example:
Item 1: **UFLK3500**
Item 2: **GMB24-MFT-X1**

067001 - 04/13 - Subject to change. © Belimo Aircontrols (USA), Inc.

SY Series Actuators

					CONTROL TYPE				
SERIES	MODEL	Run Time(s) 90°@60Hz	Power Supply	Duty Cycle	Proportional	3 Point	On/Off	Feedback	List Price
SY1	SY1-110	12 seconds	120 VAC ±10%, 50/60 Hz	30%		•	•	none, opt 1k	$857.00
	SY1-24	15 seconds	24 VAC ±10%, 50/60 Hz	30%		•	•	none, opt 1k	$857.00
	SY1-220	12 seconds	230 VAC ±10%, 50/60 Hz	30%		•	•	none, opt 1k	$857.00
	SY1-110P	12 seconds	120 VAC ±10%, 50/60 Hz	75%	•			2-10 VDC/4-20 mA	$3,099.00
	SY1-24P	15 seconds	24 VAC ±10%, 50/60 Hz	75%	•			2-10 VDC/4-20 mA	$3,099.00
	SY1-220P	12 seconds	230 VAC ±10%, 50/60 Hz	75%	•			2-10 VDC/4-20 mA	$3,099.00
SY2	SY2-110	15 seconds	120 VAC ±10%, 50/60 Hz	30%		•	•	none, opt 1k	$2,161.00
	SY2-24	15 seconds	24 VAC ±10%, 50/60 Hz	30%		•	•	none, opt 1k	$2,161.00
	SY2-220	15 seconds	230 VAC ±10%, 50/60 Hz	30%		•	•	none, opt 1k	$2,161.00
	SY2-120MFT	15 seconds	120 VAC ±10%, 50/60 Hz	75%	•			2-10 VDC/4-20 mA	$4,405.00
	SY2-24MFT	15 seconds	24 VAC ±10%, 50/60 Hz	75%	•			2-10 VDC/4-20 mA	$4,405.00
	SY2-230MFT	15 seconds	230 VAC ±10%, 50/60 Hz	75%	•			2-10 VDC/4-20 mA	$4,405.00
SY3	SY3-110	22 seconds	120 VAC ±10%, 50/60 Hz	30%		•	•	none, opt 1k	$2,463.00
	SY3-24	22 seconds	24 VAC ±10%, 50/60 Hz	30%		•	•	none, opt 1k	$2,463.00
	SY3-220	22 seconds	230 VAC ±10%, 50/60 Hz	30%		•	•	none, opt 1k	$2,463.00
	SY3-24MFT	22 seconds	120 VAC ±10%, 50/60 Hz	75%	•			2-10 VDC/4-20 mA	$4,718.00
	SY3-120MFT	22 seconds	120 VAC ±10%, 50/60 Hz	75%	•			2-10 VDC/4-20 mA	$4,718.00
	SY3-230MFT	22 seconds	230 VAC ±10%, 50/60 Hz	75%	•			2-10 VDC/4-20 mA	$4,718.00
SY4	SY4-110	16 seconds	120 VAC ±10%, 50/60 Hz	30%		•	•	none, opt 1k	$3,113.00
	SY4-24	16 seconds	24 VAC ±10%, 50/60 Hz	30%		•	•	none, opt 1k	$3,113.00
	SY4-220	16 seconds	230 VAC ±10%, 50/60 Hz	30%		•	•	none, opt 1k	$3,113.00
	SY4-24MFT	16 seconds	120 VAC ±10%, 50/60 Hz	75%	•			2-10 VDC/4-20 mA	$5,718.00
	SY4-120MFT	16 seconds	120 VAC ±10%, 50/60 Hz	75%	•			2-10 VDC/4-20 mA	$5,718.00
	SY4-230MFT	16 seconds	230 VAC ±10%, 50/60 Hz	75%	•			2-10 VDC/4-20 mA	$5,718.00
SY5	SY5-110	22 seconds	120 VAC ±10%, 50/60 Hz	30%		•	•	none, opt 1k	$3,568.00
	SY5-24	22 seconds	24 VAC ±10%, 50/60 Hz	30%		•	•	none, opt 1k	$3,568.00
	SY5-220	22 seconds	230 VAC ±10%, 50/60 Hz	30%		•	•	none, opt 1k	$3,568.00
	SY5-24MFT	22 seconds	120 VAC ±10%, 50/60 Hz	75%	•			2-10 VDC/4-20 mA	$6,171.00
	SY5-120MFT	22 seconds	120 VAC ±10%, 50/60 Hz	75%	•			2-10 VDC/4-20 mA	$6,171.00
	SY5-230MFT	22 seconds	230 VAC ±10%, 50/60 Hz	75%	•			2-10 VDC/4-20 mA	$6,171.00
SY6	SY6-110	28 seconds	120 VAC ±10%, 50/60 Hz	30%		•	•	none, opt 1k	$4,253.00
	SY6-220	28 seconds	230 VAC ±10%, 50/60 Hz	30%		•	•	none, opt 1k	$4,253.00
	SY6-120MFT	28 seconds	120 VAC ±10%, 50/60 Hz	75%	•			2-10 VDC/4-20 mA	$6,856.00
	SY6-230MFT	28 seconds	230 VAC ±10%, 50/60 Hz	75%	•			2-10 VDC/4-20 mA	$6,856.00
SY7	SY7-110	46 seconds	120 VAC ±10%, 50/60 Hz	30%		•	•	none, opt 1k	$5,090.00
	SY7-220	46 seconds	230 VAC ±10%, 50/60 Hz	30%		•	•	none, opt 1k	$5,090.00
	SY7-120MFT	46 seconds	120 VAC ±10%, 50/60 Hz	75%	•			2-10 VDC/4-20 mA	$7,625.00
	SY7-230MFT	46 seconds	230 VAC ±10%, 50/60 Hz	75%	•			2-10 VDC/4-20 mA	$7,625.00
SY8	SY8-110	46 seconds	120 VAC ±10%, 50/60 Hz	30%		•	•	none, opt 1k	$6,595.00
	SY8-220	46 seconds	230 VAC ±10%, 50/60 Hz	30%		•	•	none, opt 1k	$6,595.00
	SY8-120MFT	46 seconds	120 VAC ±10%, 50/60 Hz	75%	•			2-10 VDC/4-20 mA	$9,019.00
	SY8-230MFT	46 seconds	230 VAC ±10%, 50/60 Hz	75%	•			2-10 VDC/4-20 mA	$9,019.00
SY9	SY9-110	58 seconds	120 VAC ±10%, 50/60 Hz	30%		•	•	none, opt 1k	$8,447.00
	SY9-220	58 seconds	230 VAC ±10%, 50/60 Hz	30%		•	•	none, opt 1k	$8,447.00
	SY9-120MFT	58 seconds	120 VAC ±10%, 50/60 Hz	50%	•			2-10 VDC/4-20 mA	$10,977.00
	SY9-230MFT	58 seconds	230 VAC ±10%, 50/60 Hz	50%	•			2-10 VDC/4-20 mA	$10,977.00
SY10	SY10-110	58 seconds	120 VAC ±10%, 50/60 Hz	30%		•	•	none, opt 1k	$8,856.00
	SY10-220	58 seconds	230 VAC ±10%, 50/60 Hz	30%		•	•	none, opt 1k	$8,856.00
	SY10-120MFT	58 seconds	120 VAC ±10%, 50/60 Hz	50%	•			2-10 VDC/4-20 mA	$11,387.00
	SY10-230MFT	58 seconds	230 VAC ±10%, 50/60 Hz	50%	•			2-10 VDC/4-20 mA	$11,387.00
SY11	SY11-110	58 seconds	120 VAC ±10%, 50/60 Hz	30%		•	•	none, opt 1k	$11,738.00
	SY11-220	58 seconds	230 VAC ±10%, 50/60 Hz	30%		•	•	none, opt 1k	$11,738.00
	SY11-120MFT	58 seconds	120 VAC ±10%, 50/60 Hz	50%	•			2-10 VDC/4-20 mA	$14,273.00
	SY11-230MFT	58 seconds	230 VAC ±10%, 50/60 Hz	50%	•			2-10 VDC/4-20 mA	$14,273.00
SY12	SY12-110	58 seconds	120 VAC ±10%, 50/60 Hz	30%		•	•	none, opt 1k	$12,565.00
	SY12-220	58 seconds	230 VAC ±10%, 50/60 Hz	30%		•	•	none, opt 1k	$12,565.00
	SY12-120MFT	58 seconds	120 VAC ±10%, 50/60 Hz	50%	•			2-10 VDC/4-20 mA	$14,934.00
	SY12-230MFT	58 seconds	230 VAC ±10%, 50/60 Hz	50%	•			2-10 VDC/4-20 mA	$14,934.00

Proportional actuators will accept 0-10 VDC, 2-10 VDC, or 4-20 mA control signals as standard.
All SY actuators are non-spring return, but can be used with NSV-SY back up systems for fail-safe applications.
These products carry a two year warranty when sold as part of an assembly or with a UFLK retrofit kit.

067001 - 04/13 - Subject to change. © Belimo Aircontrols (USA), Inc.

ROTARY ACTUATORS

SERIES	MODEL	Spring Return	Electronic Fail-Safe	Tandem Mounting Available	Control Input	Feedback Position	Power Supply	List Price
AF Series*	AFBUP-X1	•		•	On/Off	-	24-240 VAC	$571.00
	AFX24-MFT-X1	•		•	Variable with MFT (VDC, PWM, Floating Point, On/Off)	variable VDC	24 VAC/DC	$648.00
AM Series*	AMB24-3-X1				Floating Point, On/Off	-	24 VAC/DC	$327.00
	AMX24-MFT-X1				Variable with MFT (VDC, PWM, Floating Point, On/Off)	variable VDC	24 VAC/DC	$510.00
GM Series*	GMB24-3-X1				Floating Point, On/Off	-	24 VAC/DC	$504.00
	GMX24-MFT-X1			•	Variable with MFT (VDC, PWM, Floating Point, On/Off)	variable VDC	24 VAC/DC	$719.00
GK Series*	GKB24-3-X1		•		Floating Point, On/Off	-	24 VAC/DC	$1,094.00
	GKX24-MFT-X1		•	•	Variable with MFT (VDC, PWM, Floating Point, On/Off)	variable VDC	24 VAC/DC	$1,509.00

***Please consult the Damper sections for a full list of product offerings. Standard run times should be considered in the selection. All air side products are applicable for retrofit kits. Select "X1" actuators come with a handle.**

MULTI-FUNCTION TECHNOLOGY

	P-CODE		Control Input	Running Time	Built-in Feedback	List Price
ROTARY ACTUATOR CODES	P-10001	A01	2-10 VDC	150 seconds	2-10 VDC	No Charge
	P-10002	A02	0-10 VDC	150 seconds	0-10 VDC	No Charge
	P-10028	A28	0-10 VDC	150 seconds	0-10 VDC	No Charge
	P-10063	A63	0.5-4.5 VDC	150 seconds	0.5-4.5 VDC	No Charge
	P-10064	A64	5.5-10 VDC	150 seconds	5.5-10 VDC	No Charge
	P-20002	W02	0.02-5.00 seconds PWM	150 seconds	2-10 VDC	No Charge
	P-20003	W03	0.10-25.5 seconds PWM	150 seconds	2-10 VDC	No Charge
	P-30001	F01	Floating Point	150 seconds	2-10 VDC	No Charge
	P-40002	J02	On/Off	150 seconds	2-10 VDC	No Charge

SY MULTI-FUNCTION TECHNOLOGY

Description	MFT-CODE	Control Input	Built-in Feedback	Loss of Signal	Running Time	List Price
MFT	ACE	2-10 VDC	2-10 VDC	stop	actuator(s) constant	No Charge
MFT	ACF	0.5-10 VDC	0.5-10 VDC	stop	actuator(s) constant	No Charge
MFT	ACG	4-20mA	4-20mA	stop	actuator(s) constant	No Charge
MFT	ACH	4-20mA	2-10 VDC	stop	actuator(s) constant	No Charge
MFT	ACJ	2-10 VDC	2-10 VDC	open	actuator(s) constant	No Charge
MFT	ACK	0.5-10 VDC	0.5-10 VDC	open	actuator(s) constant	No Charge
MFT	ACL	4-20mA	4-20mA	open	actuator(s) constant	No Charge
MFT	ACM	4-20mA	2-10 VDC	open	actuator(s) constant	No Charge
MFT	ACN	2-10 VDC	2-10 VDC	close	actuator(s) constant	No Charge
MFT	ACP	0.5-10 VDC	0.5-10 VDC	close	actuator(s) constant	No Charge
MFT	ACR	4-20mA	4-20mA	close	actuator(s) constant	No Charge
MFT	ACS	4-20mA	2-10 VDC	close	actuator(s) constant	No Charge

All other configurations carry a $34.00 list price.
Standard delivery may vary, please consult your customer service representative for the latest lead time(s).

067001 - 04/13 - Subject to change. © Belimo Aircontrols (USA), Inc.

Belimo

HS, HSU Series Butterfly Valves

Linkage/Actuator Selection Guide

2 YEAR WARRANTY

Valve Body Model	Valve Configuration	Size	Fail-Safe	Close-Off psi	Belimo Actuator Series	Belimo Linkage	List Price
HS Series Butterfly Valves	2-way	2”	No	200	AM	UFLK3900	$254.00
					SY2	UFLK3918	$246.00
			Yes	200	AF	UFLK3930	$246.00
		2½”	No	200	AM	UFLK3900	$254.00
					SY2	UFLK3918	$246.00
			Yes	200	2*AF	UFLK3936	$338.00
		3”	No	200	GM	UFLK3900	$254.00
					SY2	UFLK3918	$246.00
			Yes	200	2*AF	UFLK3936	$338.00
					GK	UFLK3900	$254.00
		4”	No	200	2*GM	UFLK3908	$350.00
					SY2	UFLK3920	$246.00
			Yes	200	2*GK	UFLK3908	$350.00
		5”	No	200	SY2	UFLK3922	$246.00
		6”	No	200	SY3	UFLK3922	$246.00
		8”	No	200	SY4	UFLK3970	$246.00
		10”	No	200	SY4	UFLK3970	$246.00
		12”	No	200	SY4	UFLK3928	$246.00
		14”	No	150	SY5	UFLK3928	$246.00
		16”	No	150	SY6	UFLK3976	$586.00
		18”	No	150	SY8	UFLK3978	$754.00
		20”	No	150	SY8	UFLK3978	$754.00
						UFLK3980	$598.00
		24”	No	150	SY11	UFLK3982	$1,226.00
	3-way	2”	No	200	AM	UFLK6900	$560.00
					SY2	UFLK6910	$560.00
			Yes	200	AF	UFLK6950	$554.00
		2½”	No	200	2*GM	UFLK6902	$560.00
					SY2	UFLK6910	$560.00
			Yes	200	2*AF	UFLK6952	$560.00
		3”	No	200	2*GM	UFLK6902	$560.00
					SY2	UFLK6910	$560.00
			Yes	200	2*GK	UFLK6902	$560.00
		4”	No	200	SY2	UFLK6912	$560.00
		5”	No	200	SY3	UFLK6914	$560.00
		6”	No	200	SY3	UFLK6914	$560.00
		8”	No	200	SY4	UFLK6920	$896.00
		10”	No	200	SY4	UFLK6920	$896.00
		12”	No	200	SY5	UFLK6922	$925.00
		14”	No	150	SY6	UFLK7018	$1,226.00
		16”	No	150	SY7	UFLK7020	$1,575.00
		18”	No	150	SY8	UFLK7022	$1,575.00
		20”	No	150	SY9	UFLK7024	$2,520.00
		24”	No	150	SY12	UFLK7026	$2,520.00
HSU Series Butterfly Valves	2-way	2”	No	50	AM	UFLK3900	$254.00
					SY1	UFLK3912	$246.00
					SY2	UFLK3918	$246.00
			Yes	50	AF	UFLK3930	$246.00
		2½”	No	50	AM	UFLK3900	$254.00
					SY1	UFLK3912	$246.00
					SY2	UFLK3918	$246.00
			Yes	50	AF	UFLK3930	$246.00
		3”	No	50	AM	UFLK3900	$254.00
					SY1	UFLK3912	$246.00
					SY2	UFLK3918	$246.00
			Yes	50	2*AF	UFLK3936	$338.00
		4”	No	50	GM	UFLK3905	$338.00
					SY2	UFLK3920	$246.00
			Yes	50	2*AF	UFLK3938	$338.00
					GK	UFLK3905	$338.00
		5”	No	50	GM	UFLK3905	$338.00
					SY2	UFLK3922	$246.00
			Yes	50	GK	UFLK3905	$338.00
		6”	No	50	2*GM	UFLK3910	$350.00
					SY2	UFLK3922	$246.00

All close-off pressures listed are approximate and based on valve condition and application.

RETROFIT SOLUTIONS

067001- 04/13 - Subject to change. © Belimo Aircontrols (USA), Inc.

Valve Body Model	Valve Configuration	Size	Fail-Safe	Close-Off psi	Belimo Actuator Series	Belimo Linkage	List Price
HSU Series Butterfly Valves	2-way	6”	Yes	50	2*GK	UFLK3910	$350.00
		8”	No	50	SY3	UFLK3924	$350.00
		10”	No	50	SY3	UFLK3926	$246.00
		12”	No	50	SY4	UFLK3928	$246.00
	3-way	2”	No	50	GM	UFLK6900	$560.00
					SY1	UFLK6908	$560.00
					SY2	UFLK6910	$560.00
			Yes	50	AF	UFLK6950	$554.00
					GK	UFLK6900	$560.00
		2½”	No	50	GM	UFLK6900	$560.00
					SY1	UFLK6908	$560.00
					SY2	UFLK6910	$560.00
			Yes	50	2*AF	UFLK6952	$560.00
					GK	UFLK6900	$560.00
		3”	No	50	GM	UFLK6900	$560.00
					SY2	UFLK6910	$560.00
			Yes	50	2*AF	UFLK6952	$560.00
					GK	UFLK6900	$560.00
		4”	No	50	2*GM	UFLK6904	$560.00
					SY2	UFLK6912	$560.00
			Yes	50	2*GK	UFLK6904	$560.00
		5”	No	50	2*GM	UFLK6906	$560.00
					SY2	UFLK6914	$560.00
			Yes	50	2*GK	UFLK6906	$560.00
		6”	No	50	2*GM	UFLK6906	$560.00
					SY2	UFLK6914	$560.00
			Yes	50	2*GK	UFLK6906	$560.00
		8”	No	50	SY3	UFLK6919	$896.00
		10”	No	50	SY4	UFLK6920	$896.00
		12”	No	50	SY4	UFLK6922	$925.00
BRAY							
30/31 Series Butterfly Valves	2-way	2”	No	175	AM	UFLK1100	$368.00
					SY1	UFLK1130	$672.00
					SY2	UFLK1132	$672.00
			Yes	175	2*AF	UFLK1102	$468.00
		2½”	No	175	GM	UFLK1100	$368.00
					SY1	UFLK1130	$672.00
					SY2	UFLK1132	$672.00
			Yes	175	2*AF	UFLK1102	$468.00
					GK	UFLK1100	$368.00
		3”	No	175	2*GM	UFLK1102	$468.00
					SY2	UFLK1132	$672.00
			Yes	175	2*GK	UFLK1102	$468.00
		4”	No	175	2*GM	UFLK1108	$475.00
					SY2	UFLK1134	$672.00
			Yes	175	2*GK	UFLK1108	$475.00
		5”	No	175	SY3	UFLK1136	$672.00
		6”	No	175	SY3	UFLK1136	$672.00
		8”	No	175	SY4	UFLK1138	$672.00
		10”	No	175	SY4	UFLK1140	$672.00
		12”	No	175	SY6	UFLK1142	$672.00
		14”	No	175	SY7	UFLK1144	$792.00
		16”	No	175	SY8	UFLK1144	$792.00
		18”	No	175	SY9	UFLK1146	$864.00
		20”	No	175	SY10	UFLK1146	$864.00
	3-way	2”	No	200	SY1	UFLK4130	$925.00
					SY2	UFLK4132	$1,226.00
			Yes	200	2*AF	UFLK4102	$792.00
		2½”	No	200	2*GM	UFLK4102	$792.00
					SY2	UFLK4132	$1,226.00
			Yes	200	2*GK	UFLK4102	$792.00
		3”	No	200	2*GM	UFLK4102	$792.00
					SY2	UFLK4132	$1,226.00
			Yes	200	2*GK	UFLK4102	$792.00
		4”	No	200	SY3	UFLK4134	$999.00
		5”	No	200	SY4	UFLK4136	$999.00

All close-off pressures listed are approximate and based on valve condition and application.

067001 - 04/13 - Subject to change. © Belimo Aircontrols (USA), Inc.

Valve Body Model	Valve Configuration	Size	Fail-Safe	Close-Off psi	Belimo Actuator Series	Belimo Linkage	List Price
30/31 Series Butterfly Valves	3-way	6”	No	200	SY4	UFLK4136	$999.00
		8”	No	200	SY5	UFLK4138	$999.00
		10”	No	200	SY6	UFLK4140	$1,226.00
		12”	No	200	SY7	UFLK4142	$1,226.00
		14”	No	150	SY8	UFLK4144	$1,350.00
		16”	No	150	SY9	UFLK4146	$1,975.00
		18”	No	150	SY11	UFLK4148	$1,975.00
		20”	No	150	SY12	UFLK4148	$1,975.00
40/41 Series Butterfly Valves	2-way	2½”	No	285	2*GM	UFLK1200	$468.00
					SY2	UFLK1224	$725.00
			Yes	285	2*GK	UFLK1200	$468.00
		3”	No	285	2*GM	UFLK1200	$468.00
					SY2	UFLK1224	$725.00
			Yes	285	2*GK	UFLK1200	$468.00
		4”	No	285	2*GM	UFLK1200	$468.00
					SY2	UFLK1224	$725.00
			Yes	285	2*GK	UFLK1200	$468.00
		5”	No	285	SY3	UFLK1226	$672.00
		6”	No	285	SY4	UFLK1228	$672.00
		8”	No	285	SY4	UFLK1230	$672.00
		10”	No	285	SY6	UFLK1232	$672.00
		12”	No	285	SY7	UFLK1234	$672.00
		14”	No	285	SY8	UFLK1236	$850.00
		16”	No	285	SY9	UFLK1238	$955.00
		18”	No	285	SY11	UFLK1240	$955.00
		20”	No	285	SY12	UFLK1242	$955.00
	3-way	2½”	No	285	2*GM	UFLK4200	$792.00
					SY2	UFLK4222	$999.00
			Yes	285	2*GK	UFLK4200	$792.00
		3”	No	285	2*GM	UFLK4200	$792.00
					SY2	UFLK4222	$999.00
			Yes	285	2*GK	UFLK4200	$792.00
		4”	No	285	SY3	UFLK4222	$999.00
		5”	No	285	SY4	UFLK4224	$999.00
		6”	No	285	SY4	UFLK4224	$999.00
		8”	No	285	SY5	UFLK4226	$999.00
		10”	No	285	SY7	UFLK4228	$1,226.00
		12”	No	285	SY8	UFLK4230	$1,226.00
		14”	No	285	SY10	UFLK4232	$2,520.00
		16”	No	285	SY12	UFLK4234	$2,520.00
CENTERLINE							
C200 Round Top Series Butterfly Valves	2-way	2”	No	200	AM	UFLK3500	$368.00
					SY1	UFLK3538	$625.00
					SY2	UFLK3540	$725.00
			Yes	200	AF	UFLK3500	$368.00
		2½”	No	200	GM	UFLK3500	$368.00
					SY1	UFLK3538	$625.00
					SY2	UFLK3540	$725.00
			Yes	200	2*AF	UFLK3502	$575.00
					GK	UFLK3500	$368.00
		3”	No	200	GM	UFLK3500	$368.00
					SY1	UFLK3538	$625.00
					SY2	UFLK3540	$725.00
			Yes	200	2*AF	UFLK3502	$575.00
					GK	UFLK3500	$368.00
		4”	No	200	2*GM	UFLK3508	$468.00
					SY2	UFLK3542	$725.00
			Yes	200	2*GK	UFLK3508	$468.00
		5”	No	200	SY2	UFLK3544	$750.00
		6”	No	200	SY3	UFLK3544	$750.00
		8”	No	200	SY4	UFLK3546	$725.00
		10”	No	200	SY4	UFLK3548	$795.00
		12”	No	200	SY5	UFLK3550	$716.00
		14”	No	150	SY5	UFLK3550	$716.00
		16”	No	150	SY7	UFLK3552	$812.00
		18”	No	150	SY8	UFLK3554	$812.00

All close-off pressures listed are approximate and based on valve condition and application.

RETROFIT SOLUTIONS

067001- 04/13 - Subject to change. © Belimo Aircontrols (USA), Inc.

Valve Body Model	Valve Configuration	Size	Fail-Safe	Close-Off psi	Belimo Actuator Series	Belimo Linkage	List Price
C200 Round Top Series Butterfly Valves	2-way	20”	No	150	SY8	UFLK3556	$812.00
		24”	No	150	SY10	UFLK3558	$1,252.00
	3-way	2”	No	200	AM	UFLK6500	$672.00
					SY1	UFLK6536	$872.00
					SY2	UFLK6538	$1,226.00
			Yes	200	2*AF	UFLK6502	$725.00
		2½”	No	200	GM	UFLK6500	$672.00
					SY1	UFLK6536	$872.00
					SY2	UFLK6538	$1,226.00
			Yes	200	2*AF	UFLK6502	$725.00
					GK	UFLK6500	$672.00
		3”	No	200	2*GM	UFLK6502	$725.00
					SY1	UFLK6536	$872.00
					SY2	UFLK6538	$1,226.00
			Yes	200	2*GK	UFLK6502	$725.00
		4”	No	200	2*GM	UFLK6508	$725.00
					SY2	UFLK6540	$1,226.00
			Yes	200	2*GK	UFLK6508	$725.00
		5”	No	200	SY3	UFLK6542	$1,226.00
		6”	No	200	SY4	UFLK6544	$1,226.00
		8”	No	200	SY4	UFLK6546	$1,226.00
		10”	No	200	SY5	UFLK6548	$1,226.00
		12”	No	200	SY7	UFLK6550	$1,300.00
		14”	No	150	SY7	UFLK6550	$1,300.00
		16”	No	150	SY8	UFLK6552	$1,875.00
		18”	No	150	SY9	UFLK6554	$2,520.00
		20”	No	150	SY10	UFLK6556	$2,520.00
C200 Square Top Series Butterfly Valves	2-way	2”	No	200	AM	UFLK1300	$368.00
					SY1	UFLK1338	$525.00
					SY2	UFLK1340	$672.00
			Yes	200	AF	UFLK1300	$368.00
		2½”	No	200	GM	UFLK1300	$368.00
					SY1	UFLK1338	$525.00
					SY2	UFLK1340	$672.00
			Yes	200	2*AF	UFLK1302	$468.00
					GK	UFLK1300	$368.00
		3”	No	200	GM	UFLK1300	$368.00
					SY1	UFLK1338	$525.00
					SY2	UFLK1340	$672.00
			Yes	200	2*AF	UFLK1302	$468.00
					GK	UFLK1300	$368.00
		4”	No	200	2*GM	UFLK1308	$468.00
					SY2	UFLK1342	$672.00
			Yes	200	2*GK	UFLK1308	$468.00
		5”	No	200	SY2	UFLK1344	$672.00
		6”	No	200	SY3	UFLK1344	$672.00
		8”	No	200	SY4	UFLK1346	$672.00
		10”	No	200	SY4	UFLK1348	$672.00
		12”	No	200	SY5	UFLK1350	$672.00
		14”	No	150	SY5	UFLK1350	$672.00
		16”	No	150	SY7	UFLK1352	$672.00
		18”	No	150	SY8	UFLK1354	$672.00
		20”	No	150	SY8	UFLK1356	$672.00
		24”	No	150	SY10	UFLK1358	$725.00
	3-way	2”	No	200	AM	UFLK4300	$672.00
					SY1	UFLK4338	$792.00
					SY2	UFLK4340	$999.00
			Yes	200	2*AF	UFLK4302	$725.00
		2½”	No	200	GM	UFLK4300	$672.00
					SY2	UFLK4340	$999.00
			Yes	200	2*AF	UFLK4302	$725.00
					GK	UFLK4300	$672.00
		3”	No	200	2*GM	UFLK4302	$725.00
					SY2	UFLK4340	$999.00
			Yes	200	2*GK	UFLK4302	$725.00

All close-off pressures listed are approximate and based on valve condition and application.

067001 - 04/13 - Subject to change. © Belimo Aircontrols (USA), Inc.

Valve Body Model	Valve Configuration	Size	Fail-Safe	Close-Off psi	Belimo Actuator Series	Belimo Linkage	List Price
C200 Square Top Series Butterfly Valves	3-way	4”	No	200	2*GM	UFLK4308	$725.00
					SY2	UFLK4342	$1,226.00
			Yes	200	2*GK	UFLK4308	$725.00
		5”	No	200	SY3	UFLK4344	$999.00
		6”	No	200	SY4	UFLK4346	$999.00
		8”	No	200	SY4	UFLK4348	$999.00
		10”	No	200	SY5	UFLK4350	$1,025.00
		12”	No	200	SY7	UFLK4352	$1,288.00
		14”	No	150	SY7	UFLK4352	$1,288.00
		16”	No	150	SY8	UFLK4354	$1,952.00
		18”	No	150	SY9	UFLK4356	$2,520.00
		20”	No	150	SY10	UFLK4358	$2,520.00
C225 Square Top Series Butterfly Valves	2-way	2”	No	285	GM	UFLK1400	$419.00
					SY1	UFLK1436	$525.00
					SY2	UFLK1438	$725.00
			Yes	285	2*AF	UFLK1402	$565.00
					GK	UFLK1400	$419.00
		2½”	No	285	GM	UFLK1400	$419.00
					SY1	UFLK1436	$525.00
					SY2	UFLK1438	$725.00
			Yes	285	2*AF	UFLK1402	$565.00
					GK	UFLK1400	$419.00
		3”	No	285	GM	UFLK1400	$419.00
					SY1	UFLK1436	$525.00
					SY2	UFLK1438	$725.00
			Yes	285	2*AF	UFLK1402	$565.00
					GK	UFLK1400	$419.00
		4”	No	285	2*GM	UFLK1408	$468.00
					SY2	UFLK1440	$725.00
			Yes	285	2*GK	UFLK1408	$468.00
		5”	No	285	SY2	UFLK1442	$725.00
		6”	No	285	SY4	UFLK1444	$725.00
		8”	No	285	SY4	UFLK1446	$672.00
		10”	No	285	SY5	UFLK1448	$672.00
		12”	No	285	SY6	UFLK1450	$672.00
		14”	No	285	SY7	UFLK1452	$672.00
		16”	No	285	SY9	UFLK1454	$925.00
		18”	No	285	SY10	UFLK1456	$925.00
		20”	No	285	SY10	UFLK1458	$725.00
	3-way	2”	No	285	GM	UFLK4400	$672.00
					SY1	UFLK4436	$872.00
					SY2	UFLK4438	$1,226.00
			Yes	285	GK	UFLK4400	$672.00
		2½”	No	285	GM	UFLK4400	$672.00
					SY2	UFLK4438	$1,226.00
			Yes	285	GK	UFLK4400	$672.00
		3”	No	285	2*GM	UFLK4402	$725.00
					SY2	UFLK4438	$1,226.00
			Yes	285	2*GK	UFLK4402	$725.00
		4”	No	285	SY3	UFLK4440	$1,226.00
		5”	No	285	SY3	UFLK4442	$1,226.00
		6”	No	285	SY4	UFLK4444	$999.00
		8”	No	285	SY5	UFLK4446	$1,226.00
		10”	No	285	SY7	UFLK4448	$1,226.00
		12”	No	285	SY8	UFLK4450	$1,226.00
		14”	No	285	SY8	UFLK4452	$1,226.00
		16”	No	285	SY12	UFLK4454	$2,520.00
FLOWSEAL							
1L/W Series Butterfly Valves	2-way	2”	No	285	GM	UFLK1700	$354.00
					SY1	UFLK1734	$586.00
					SY2	UFLK1736	$672.00
			Yes	285	2*AF	UFLK1702	$468.00
					GK	UFLK1700	$354.00
		2½”	No	285	2*GM	UFLK1702	$468.00
					SY2	UFLK1736	$672.00
			Yes	285	2*GK	UFLK1702	$468.00

All close-off pressures listed are approximate and based on valve condition and application.

RETROFIT SOLUTIONS

067001- 04/13 - Subject to change. © Belimo Aircontrols (USA), Inc.

Valve Body Model	Valve Configuration	Size	Fail-Safe	Close-Off psi	Belimo Actuator Series	Belimo Linkage	List Price
1L/W Series Butterfly Valves	2-way	3”	No	285	2*GM	UFLK1708	$468.00
					GM	UFLK1709	$468.00
					SY2	UFLK1738	$586.00
			Yes	285	2*GK	UFLK1708	$468.00
					GK	UFLK1709	$468.00
		4”	No	285	2*GM	UFLK1708	$468.00
					GM	UFLK1709	$468.00
					SY2	UFLK1738	$586.00
			Yes	285	2*GK	UFLK1708	$468.00
					GK	UFLK1709	$468.00
		5”	No	285	SY3	UFLK1740	$586.00
		6”	No	285	SY3	UFLK1740	$586.00
		8”	No	285	SY4	UFLK1742	$672.00
		10”	No	285	SY4	UFLK1744	$672.00
		12”	No	285	SY6	UFLK1746	$672.00
		14”	No	285	SY6	UFLK1746	$672.00
		16”	No	285	SY7	UFLK1748	$925.00
		18”	No	285	SY9	UFLK1750	$1,226.00
		20”	No	285	SY9	UFLK1752	$1,350.00
	3-way	2”	No	285	GM	UFLK4700	$672.00
					SY2	UFLK4734	$1,226.00
			Yes	285	2*AF	UFLK4702	$872.00
					GK	UFLK4700	$672.00
		2½”	No	285	2*GM	UFLK4702	$872.00
					SY2	UFLK4734	$1,226.00
			Yes	285	2*GK	UFLK4702	$872.00
		3”	No	285	2*GM	UFLK4708	$872.00
					SY2	UFLK4736	$936.00
			Yes	285	2*GK	UFLK4708	$872.00
		4”	No	285	SY3	UFLK4736	$936.00
		5”	No	285	SY4	UFLK4738	$1,226.00
		6”	No	285	SY4	UFLK4738	$1,226.00
		8”	No	285	SY4	UFLK4740	$1,226.00
		10”	No	285	SY6	UFLK4742	$1,226.00
		12”	No	285	SY7	UFLK4744	$1,975.00
		14”	No	285	SY8	UFLK4744	$1,975.00
		16”	No	285	SY9	UFLK4746	$2,520.00
		18”	No	285	SY11	UFLK4748	$2,520.00
		20”	No	285	SY12	UFLK4750	$2,520.00
3L/W Series Butterfly Valves	2-way	2”	No	780	SY3	UFLK1828	$586.00
		2½”	No	780	SY3	UFLK1828	$586.00
		3”	No	780	SY3	UFLK1830	$468.00
		4”	No	780	SY4	UFLK1832	$672.00
		5”	No	780	SY4	UFLK1834	$672.00
		6”	No	780	SY4	UFLK1836	$586.00
		8”	No	780	SY7	UFLK1838	$872.00
		10”	No	780	SY7	UFLK1840	$872.00
		12”	No	780	SY9	UFLK1842	$1,226.00
		14”	No	780	SY9	UFLK1844	$1,226.00
	3-way	2”	No	780	SY3	UFLK4828	$1,226.00
		2½”	No	780	SY3	UFLK4828	$1,226.00
		3”	No	780	SY3	UFLK4844	$1,226.00
		4”	No	780	SY4	UFLK4830	$1,226.00
		5”	No	780	SY4	UFLK4832	$1,226.00
		6”	No	780	SY4	UFLK4834	$1,226.00
		8”	No	780	SY8	UFLK4836	$1,575.00
		10”	No	780	SY8	UFLK4838	$1,975.00
		12”	No	780	SY12	UFLK4840	$2,520.00
		14”	No	780	SY12	UFLK4842	$2,520.00
JOHNSON CONTROLS							
VF.. (H) Series Butterfly Valves	2-way	2”	No	175	GM	UFLK2100	$368.00
					SY1	UFLK2136	$672.00
					SY2	UFLK2138	$725.00
			Yes	175	2*AF	UFLK2102	$468.00
					GK	UFLK2100	$368.00

All close-off pressures listed are approximate and based on valve condition and application.

067001 - 04/13 - Subject to change. © Belimo Aircontrols (USA), Inc.

Valve Body Model	Valve Configuration	Size	Fail-Safe	Close-Off psi	Belimo Actuator Series	Belimo Linkage	List Price
VF.. (H) Series Butterfly Valves	2-way	2½"	No	175	GM	UFLK2100	$368.00
					SY1	UFLK2136	$672.00
					SY2	UFLK2138	$725.00
			Yes	175	2*AF	UFLK2102	$468.00
					GK	UFLK2100	$368.00
		3"	No	175	GM	UFLK2100	$368.00
					SY1	UFLK2136	$672.00
					SY2	UFLK2138	$725.00
			Yes	175	2*AF	UFLK2102	$468.00
					GK	UFLK2100	$368.00
		4"	No	175	2*GM	UFLK2108	$468.00
					SY2	UFLK2140	$725.00
			Yes	175	2*GK	UFLK2108	$468.00
		5"	No	175	SY3	UFLK2142	$725.00
		6"	No	175	SY4	UFLK2144	$725.00
		8"	No	175	SY4	UFLK2158	$725.00
		10"	No	175	SY5	UFLK2146	$725.00
		12"	No	175	SY7	UFLK2148	$725.00
		14"	No	150	SY7	UFLK2156	$725.00
		16"	No	150	SY9	UFLK2150	$872.00
		18"	No	150	SY10	UFLK2152	$864.00
		20"	No	150	SY10	UFLK2154	$864.00
	3-way	2"	No	175	GM	UFLK5100	$725.00
					SY1	UFLK5130	$792.00
					SY2	UFLK5132	$999.00
			Yes	175	2*AF	UFLK5102	$792.00
					GK	UFLK5100	$725.00
		2½"	No	175	2*GM	UFLK5102	$792.00
					SY2	UFLK5132	$999.00
			Yes	175	2*GK	UFLK5102	$792.00
		3"	No	175	2*GM	UFLK5102	$792.00
					SY2	UFLK5132	$999.00
			Yes	175	2*GK	UFLK5102	$792.00
		4"	No	175	SY3	UFLK5134	$999.00
		5"	No	175	SY4	UFLK5136	$1,226.00
		6"	No	175	SY4	UFLK5136	$1,226.00
		8"	No	175	SY5	UFLK5138	$1,226.00
		10"	No	175	SY6	UFLK5140	$999.00
		12"	No	175	SY7	UFLK5142	$1,226.00
		14"	No	150	SY8	UFLK5144	$1,226.00
		16"	No	150	SY9	UFLK5146	$2,520.00
		18"	No	150	SY11	UFLK5148	$2,520.00
		20"	No	150	SY12	UFLK5150	$2,520.00
KEYSTONE							
360/362 Series Butterfly Valves, K-LOK	2-way	2½"	No	285	GM	UFLK2400	$429.00
					SY1	UFLK2440	$672.00
					SY2	UFLK2442	$725.00
			Yes	285	2*AF	UFLK2402	$429.00
					GK	UFLK2400	$429.00
		3"	No	285	2*GM	UFLK2408	$468.00
					SY2	UFLK2444	$725.00
			Yes	285	2*GK	UFLK2408	$468.00
		4"	No	285	2*GM	UFLK2414	$468.00
					SY2	UFLK2446	$672.00
			Yes	285	2*GK	UFLK2414	$468.00
		5"	No	285	SY2	UFLK2446	$672.00
		6"	No	285	SY3	UFLK2448	$725.00
		8"	No	285	SY3	UFLK2450	$672.00
		10"	No	285	SY4	UFLK2452	$725.00
		12"	No	285	SY4	UFLK2454	$725.00
		14"	No	285	SY6	UFLK2456	$672.00
		16"	No	285	SY6	UFLK2458	$725.00
		18"	No	285	SY7	UFLK2460	$850.00
		20"	No	285	SY9	UFLK2462	$955.00
		24"	No	285	SY9	UFLK2464	$955.00

All close-off pressures listed are approximate and based on valve condition and application.

067001- 04/13 - Subject to change. © Belimo Aircontrols (USA), Inc.

Valve Body Model	Valve Configuration	Size	Fail-Safe	Close-Off psi	Belimo Actuator Series	Belimo Linkage	List Price
360/362 Series Butterfly Valves, K-LOK	3-way	2½"	No	285	GM	UFLK5400	$672.00
					SY2	UFLK5440	$1,226.00
			Yes	285	2*AF	UFLK5402	$792.00
					GK	UFLK5400	$672.00
		3"	No	285	2*GM	UFLK5408	$792.00
					SY2	UFLK5442	$1,226.00
			Yes	285	2*GK	UFLK5408	$792.00
		4"	No	285	2*GM	UFLK5414	$792.00
					SY2	UFLK5444	$1,226.00
			Yes	285	2*GK	UFLK5414	$792.00
		5"	No	285	SY3	UFLK5444	$1,226.00
		6"	No	285	SY4	UFLK5446	$1,226.00
		8"	No	285	SY4	UFLK5448	$1,226.00
		10"	No	285	SY4	UFLK5450	$1,226.00
		12"	No	285	SY6	UFLK5452	$1,952.00
		14"	No	285	SY7	UFLK5454	$1,952.00
		16"	No	285	SY8	UFLK5456	$1,952.00
		18"	No	285	SY9	UFLK5458	$2,520.00
		20"	No	285	SY11	UFLK5460	$2,520.00
		24"	No	285	SY12	UFLK5462	$2,520.00
370/372 Series Butterfly Valves, K-LOK	2-way	2½"	No	600	SY3	UFLK2526	$725.00
		3"	No	600	SY3	UFLK2528	$672.00
		4"	No	600	SY4	UFLK2530	$725.00
		5"	No	600	SY4	UFLK2530	$725.00
		6"	No	600	SY4	UFLK2532	$725.00
		8"	No	600	SY7	UFLK2534	$872.00
		10"	No	600	SY7	UFLK2536	$725.00
		12"	No	600	SY9	UFLK2538	$1,288.00
		14"	No	600	SY9	UFLK2540	$925.00
	3-way	2½"	No	600	SY4	UFLK5526	$1,226.00
		3"	No	600	SY4	UFLK5528	$1,226.00
		4"	No	600	SY4	UFLK5530	$1,226.00
		5"	No	600	SY4	UFLK5530	$1,226.00
		6"	No	600	SY4	UFLK5532	$1,226.00
		8"	No	600	SY8	UFLK5534	$1,226.00
		10"	No	600	SY8	UFLK5536	$1,952.00
		12"	No	600	SY12	UFLK5538	$2,520.00
		14"	No	600	SY12	UFLK5540	$2,520.00
AR1/AR2 Series Butterfly Valves	2-way	2"	No	175	GM	UFLK2300	$429.00
					SY1	UFLK2334	$672.00
					SY2	UFLK2336	$725.00
			Yes	175	2*AF	UFLK2302	$468.00
					GK	UFLK2300	$429.00
		2½"	No	175	GM	UFLK2300	$429.00
					SY1	UFLK2334	$672.00
					SY2	UFLK2336	$725.00
			Yes	175	2*AF	UFLK2302	$468.00
					GK	UFLK2300	$429.00
		3"	No	175	GM	UFLK2300	$429.00
					SY1	UFLK2334	$672.00
					SY2	UFLK2336	$725.00
			Yes	175	2*AF	UFLK2302	$468.00
					GK	UFLK2300	$429.00
		4"	No	175	2*GM	UFLK2308	$468.00
					SY2	UFLK2338	$725.00
			Yes	175	2*GK	UFLK2308	$468.00
		5"	No	175	SY3	UFLK2340	$725.00
		6"	No	175	SY4	UFLK2356	$672.00
		8"	No	175	SY4	UFLK2342	$675.00
		10"	No	175	SY5	UFLK2344	$725.00
		12"	No	175	SY7	UFLK2346	$872.00
		14"	No	150	SY7	UFLK2348	$672.00
		16"	No	150	SY9	UFLK2350	$672.00
		18"	No	150	SY10	UFLK2352	$925.00
		20"	No	150	SY11	UFLK2352	$925.00
		24"	No	150	SY12	UFLK2354	$925.00

All close-off pressures listed are approximate and based on valve condition and application.

067001 - 04/13 - Subject to change. © Belimo Aircontrols (USA), Inc.

Valve Body Model	Valve Configuration	Size	Fail-Safe	Close-Off psi	Belimo Actuator Series	Belimo Linkage	List Price
AR1/AR2 Series Butterfly Valves	3-way	2”	No	175	GM	UFLK5300	$672.00
					SY1	UFLK5332	$872.00
					SY2	UFLK5334	$1,226.00
			Yes	175	2*AF	UFLK5302	$792.00
					GK	UFLK5300	$672.00
		2½”	No	175	GM	UFLK5300	$672.00
					SY2	UFLK5334	$1,226.00
			Yes	175	2*AF	UFLK5302	$792.00
					GK	UFLK5300	$672.00
		3”	No	175	2*GM	UFLK5302	$792.00
					SY2	UFLK5334	$1,226.00
			Yes	175	2*GK	UFLK5302	$792.00
		4”	No	175	SY3	UFLK5336	$1,226.00
		5”	No	175	SY4	UFLK5338	$1,226.00
		6”	No	175	SY4	UFLK5338	$1,226.00
		8”	No	175	SY5	UFLK5340	$1,226.00
		10”	No	175	SY7	UFLK5342	$1,350.00
		12”	No	175	SY8	UFLK5344	$1,350.00
		14”	No	150	SY9	UFLK5346	$2,520.00
		16”	No	150	SY10	UFLK5348	$2,520.00
		18”	No	150	SY12	UFLK5350	$2,520.00
Figure 222 Series Butterfly Valves	2-way	2”	No	200	GM	UFLK2200	$368.00
					SY1	UFLK2224	$672.00
					SY2	UFLK2226	$725.00
			Yes	200	2*AF	UFLK2202	$468.00
					GK	UFLK2200	$368.00
		2½”	No	200	GM	UFLK2200	$368.00
					SY1	UFLK2224	$672.00
					SY2	UFLK2226	$725.00
			Yes	200	2*AF	UFLK2202	$468.00
					GK	UFLK2200	$368.00
		3”	No	200	GM	UFLK2200	$368.00
					SY1	UFLK2224	$672.00
					SY2	UFLK2226	$725.00
			Yes	200	2*AF	UFLK2202	$468.00
					GK	UFLK2200	$368.00
		4”	No	200	2*GM	UFLK2208	$468.00
					SY2	UFLK2228	$725.00
			Yes	200	2*GK	UFLK2208	$468.00
		5”	No	200	SY3	UFLK2230	$725.00
		6”	No	200	SY4	UFLK2232	$672.00
		8”	No	200	SY4	UFLK2234	$672.00
		10”	No	200	SY5	UFLK2236	$672.00
		12”	No	200	SY7	UFLK2238	$872.00
	3-way	2”	No	200	GM	UFLK5200	$586.00
					SY2	UFLK5224	$1,226.00
			Yes	200	2*AF	UFLK5202	$792.00
					GK	UFLK5200	$586.00
		2½”	No	200	GM	UFLK5200	$586.00
					SY2	UFLK5224	$1,226.00
			Yes	200	2*AF	UFLK5202	$792.00
					GK	UFLK5200	$586.00
		3”	No	200	2*GM	UFLK5202	$792.00
					SY2	UFLK5224	$1,226.00
			Yes	200	2*GK	UFLK5202	$792.00
		4”	No	200	SY3	UFLK5226	$1,226.00
		5”	No	200	SY4	UFLK5228	$1,226.00
		6”	No	200	SY4	UFLK5228	$1,226.00
		8”	No	200	SY5	UFLK5230	$1,226.00
		10”	No	200	SY7	UFLK5232	$1,350.00
		12”	No	200	SY8	UFLK5234	$1,350.00
MILWAUKEE							
CL Series Butterfly Valves	2-way	2”	No	150	AM	UFLK2600	$468.00
					SY1	UFLK2624	$616.00
					SY2	UFLK2628	$725.00
			Yes	150	AF	UFLK2600	$468.00

All close-off pressures listed are approximate and based on valve condition and application.

067001- 04/13 - Subject to change. © Belimo Aircontrols (USA), Inc.

Valve Body Model	Valve Configuration	Size	Fail-Safe	Close-Off psi	Belimo Actuator Series	Belimo Linkage	List Price
CL Series Butterfly Valves	2-way	2½"	No	150	AM	UFLK2600	$468.00
					SY1	UFLK2624	$616.00
					SY2	UFLK2628	$725.00
			Yes	150	AF	UFLK2600	$468.00
		3"	No	150	GM	UFLK2600	$468.00
					SY1	UFLK2624	$616.00
					SY2	UFLK2628	$725.00
			Yes	150	2*AF	UFLK2602	$575.00
					GK	UFLK2600	$468.00
		4"	No	150	2*GM	UFLK2608	$575.00
					SY2	UFLK2630	$725.00
			Yes	150	2*GK	UFLK2608	$575.00
		5"	No	150	2*GM	UFLK2608	$575.00
					SY2	UFLK2630	$725.00
			Yes	150	2*GK	UFLK2608	$575.00
		6"	No	150	SY3	UFLK2632	$672.00
		8"	No	150	SY4	UFLK2634	$672.00
		10"	No	150	SY4	UFLK2636	$672.00
		12"	No	150	SY5	UFLK2636	$672.00
	3-way	2"	No	150	AM	UFLK5600	$775.00
					SY1	UFLK5622	$925.00
					SY2	UFLK5624	$1,226.00
			Yes	150	2*AF	UFLK5602	$775.00
		2½"	No	150	GM	UFLK5600	$775.00
					SY1	UFLK5622	$925.00
					SY2	UFLK5624	$1,226.00
			Yes	150	2*AF	UFLK5602	$775.00
					GK	UFLK5600	$775.00
		3"	No	150	GM	UFLK5600	$775.00
					SY2	UFLK5624	$1,226.00
			Yes	150	2*AF	UFLK5602	$775.00
					GK	UFLK5600	$775.00
		4"	No	150	2*GM	UFLK5608	$775.00
					SY2	UFLK5626	$1,226.00
			Yes	150	2*GK	UFLK5608	$775.00
		5"	No	150	SY3	UFLK5626	$1,226.00
		6"	No	150	SY4	UFLK5628	$1,226.00
		8"	No	150	SY4	UFLK5630	$1,226.00
		10"	No	150	SY6	UFLK5632	$1,226.00
		12"	No	150	SY7	UFLK5634	$1,350.00
ML Series Butterfly Valves	2-way	2"	No	150	AM	UFLK2700	$354.00
					SY1	UFLK2732	$672.00
					SY2	UFLK2734	$725.00
			Yes	150	AF	UFLK2700	$354.00
		2½"	No	150	AM	UFLK2700	$354.00
					SY1	UFLK2732	$672.00
					SY2	UFLK2734	$725.00
			Yes	150	AF	UFLK2700	$354.00
		3"	No	150	GM	UFLK2700	$354.00
					SY1	UFLK2732	$672.00
					SY2	UFLK2734	$725.00
			Yes	150	2*AF	UFLK2702	$525.00
					GK	UFLK2700	$354.00
		4"	No	150	2*GM	UFLK2708	$450.00
					SY2	UFLK2736	$725.00
			Yes	150	2*GK	UFLK2708	$450.00
		5"	No	150	2*GM	UFLK2708	$450.00
					SY2	UFLK2736	$725.00
			Yes	150	2*GK	UFLK2708	$450.00
		6"	No	150	SY3	UFLK2738	$725.00
		8"	No	150	SY4	UFLK2740	$725.00
		10"	No	150	SY4	UFLK2742	$725.00
		12"	No	150	SY5	UFLK2742	$725.00
		14"	No	150	SY7	UFLK2744	$792.00
		16"	No	150	SY7	UFLK2744	$792.00
		18"	No	150	SY8	UFLK2746	$725.00

All close-off pressures listed are approximate and based on valve condition and application.

067001 - 04/13 - Subject to change. © Belimo Aircontrols (USA), Inc.

Valve Body Model	Valve Configuration	Size	Fail-Safe	Close-Off psi	Belimo Actuator Series	Belimo Linkage	List Price
ML Series Butterfly Valves	2-way	20”	No	150	SY9	UFLK2748	$872.00
		24”	No	150	SY10	UFLK2750	$864.00
	3-way	2”	No	150	AM	UFLK5700	$586.00
					SY1	UFLK5732	$925.00
					SY2	UFLK5734	$1,226.00
			Yes	150	2*AF	UFLK5702	$775.00
		2½”	No	150	AM	UFLK5700	$586.00
					SY1	UFLK5732	$925.00
					SY2	UFLK5734	$1,226.00
			Yes	150	2*AF	UFLK5702	$775.00
		3”	No	150	GM	UFLK5700	$586.00
					SY2	UFLK5734	$1,226.00
			Yes	150	2*AF	UFLK5702	$775.00
					GK	UFLK5700	$586.00
		4”	No	150	2*GM	UFLK5708	$775.00
					SY2	UFLK5736	$1,226.00
			Yes	150	2*GK	UFLK5708	$775.00
		5”	No	150	SY3	UFLK5736	$1,226.00
		6”	No	150	SY4	UFLK5738	$1,226.00
		8”	No	150	SY4	UFLK5740	$1,226.00
		10”	No	150	SY6	UFLK5742	$1,226.00
		12”	No	150	SY7	UFLK5744	$1,226.00
		14”	No	150	SY8	UFLK5746	$1,226.00
		16”	No	150	SY9	UFLK5748	$2,520.00
		18”	No	150	SY10	UFLK5750	$2,520.00
		20”	No	150	SY11	UFLK5750	$2,520.00
NIBCO							
LD1/WD1 Series Butterfly Valves	2-way	14”	No	150	SY7	UFLK2960	$872.00
		16”	No	150	SY8	UFLK2968	$872.00
		18”	No	150	SY8	UFLK2962	$792.00
		20”	No	150	SY9	UFLK2964	$725.00
		24”	No	150	SY11	UFLK2966	$725.00
	3-way	14”	No	150	SY8	UFLK5956	$1,952.00
		16”	No	150	SY9	UFLK5958	$1,952.00
		18”	No	150	SY10	UFLK5960	$1,952.00
		20”	No	150	SY12	UFLK5962	$1,952.00
LD2/WD2, LD3 Series Butterfly Valves	2-way	2”	No	150	GM	UFLK2900	$398.00
					SY1	UFLK2942	$525.00
					SY2	UFLK2946	$725.00
			Yes	150	2*AF	UFLK2902	$468.00
					GK	UFLK2900	$398.00
		2½”	No	150	GM	UFLK2908	$368.00
					SY1	UFLK2944	$672.00
					SY2	UFLK2948	$725.00
			Yes	150	2*AF	UFLK2910	$525.00
					GK	UFLK2908	$368.00
		3”	No	150	2*GM	UFLK2910	$525.00
					SY2	UFLK2948	$725.00
			Yes	150	2*GK	UFLK2910	$525.00
		4”	No	150	2*GM	UFLK2916	$525.00
					SY2	UFLK2950	$725.00
			Yes	150	2*GK	UFLK2916	$525.00
		5”	No	150	SY3	UFLK2952	$630.00
		6”	No	150	SY3	UFLK2952	$630.00
		8”	No	150	SY4	UFLK2954	$672.00
		10”	No	150	SY4	UFLK2956	$675.00
		12”	No	150	SY6	UFLK2958	$792.00
	3-way	2”	No	150	GM	UFLK5900	$625.00
					SY2	UFLK5942	$1,226.00
			Yes	150	2*AF	UFLK5902	$792.00
					GK	UFLK5900	$625.00
		2½”	No	150	2*GM	UFLK5910	$792.00
					SY2	UFLK5944	$1,226.00
			Yes	150	2*GK	UFLK5910	$792.00

All close-off pressures listed are approximate and based on valve condition and application.

067001- 04/13 - Subject to change. © Belimo Aircontrols (USA), Inc.

Valve Body Model	Valve Configuration	Size	Fail-Safe	Close-Off psi	Belimo Actuator Series	Belimo Linkage	List Price
LD2/WD2, LD3 Series Butterfly Valves	3-way	3”	No	150	2*GM	UFLK5910	$792.00
					SY2	UFLK5944	$1,226.00
			Yes	150	2*GK	UFLK5910	$792.00
		4”	No	150	SY3	UFLK5946	$984.00
		5”	No	150	SY4	UFLK5948	$1,226.00
		6”	No	150	SY4	UFLK5948	$1,226.00
		8”	No	150	SY6	UFLK5950	$1,226.00
		10”	No	150	SY6	UFLK5952	$1,226.00
		12”	No	150	SY8	UFLK5954	$1,288.00
PDC							
27 Series Butterfly Valves (Double D Shaft Type)	2-way	2”	No	150	GM	UFLK3100	$429.00
					SY1	UFLK3122	$672.00
					SY2	UFLK3124	$725.00
			Yes	150	2*AF	UFLK3102	$575.00
					GK	UFLK3100	$429.00
		2½”	No	150	2*GM	UFLK3102	$575.00
					SY2	UFLK3124	$725.00
			Yes	150	2*GK	UFLK3102	$575.00
		3”	No	150	2*GM	UFLK3102	$575.00
					SY2	UFLK3124	$725.00
			Yes	150	2*GK	UFLK3102	$575.00
		4”	No	150	2*GM	UFLK3108	$468.00
					SY2	UFLK3126	$672.00
			Yes	150	2*GK	UFLK3108	$468.00
		5”	No	150	SY3	UFLK3128	$725.00
		6”	No	150	SY3	UFLK3130	$672.00
		8”	No	150	SY4	UFLK3132	$672.00
		10”	No	150	SY4	UFLK3132	$672.00
		12”	No	150	SY6	UFLK3132	$672.00
	3-way	2”	No	150	GM	UFLK6100	$672.00
					SY2	UFLK6122	$1,226.00
			Yes	150	2*AF	UFLK6102	$792.00
					GK	UFLK6100	$672.00
		2½”	No	150	2*GM	UFLK6102	$792.00
					SY2	UFLK6122	$1,226.00
			Yes	150	2*GK	UFLK6102	$792.00
		3”	No	150	2*GM	UFLK6102	$792.00
					SY2	UFLK6122	$1,226.00
			Yes	150	2*GK	UFLK6102	$792.00
		4”	No	150	SY3	UFLK6124	$1,226.00
		5”	No	150	SY4	UFLK6126	$1,226.00
		6”	No	150	SY4	UFLK6128	$1,226.00
		8”	No	150	SY4	UFLK6130	$1,226.00
		10”	No	150	SY6	UFLK6132	$1,226.00
		12”	No	150	SY7	UFLK6134	$1,288.00
VICTAULIC							
Masterseal (New Style) Series Butterfly Valves	2-way	2”	No	200	AM	UFLK8172	$344.00
					SY1	UFLK8178	$375.00
					SY2	UFLK8180	$675.00
			Yes	200	2*AF	UFLK8174	$398.00
		2½”	No	200	GM	UFLK8172	$344.00
					SY1	UFLK8178	$375.00
					SY2	UFLK8180	$675.00
			Yes	200	2*AF	UFLK8174	$398.00
					GK	UFLK8172	$344.00
		3”	No	200	GM	UFLK8172	$344.00
					SY2	UFLK8180	$675.00
			Yes	200	GK	UFLK8172	$344.00
		4”	No	200	2*GM	UFLK8176	$461.00
					SY2	UFLK8182	$598.00
			Yes	200	2*GK	UFLK8176	$461.00
		5”	No	200	SY3	UFLK8184	$675.00
		6”	No	200	SY3	UFLK8184	$675.00
		8”	No	200	SY4	UFLK8188	$685.00
		10”	No	200	SY5	UFLK8190	$685.00
		12”	No	200	SY6	UFLK8190	$685.00

All close-off pressures listed are approximate and based on valve condition and application.

067001 - 04/13 - Subject to change. © Belimo Aircontrols (USA), Inc.

Victaulic

Masterseal, Vic300 Series Butterfly Valves

Linkage/Actuator Selection Guide

2 YEAR WARRANTY

Valve Body Model	Valve Configuration	Size	Fail-Safe	Close-Off psi	Belimo Actuator Series	Belimo Linkage	List Price
Masterseal (New Style) Series Butterfly Valves	3-way	2”	No	200	GM	UFLK7400	$672.00
					SY1	UFLK7404	$725.00
					SY2	UFLK7406	$1,375.00
			Yes	200	2*AF	UFLK7402	$725.00
					GK	UFLK7400	$672.00
		2½”	No	200	2*GM	UFLK7402	$725.00
					SY2	UFLK7406	$1,375.00
			Yes	200	2*GK	UFLK7402	$725.00
		3”	No	200	SY2	UFLK7406	$1,375.00
		4”	No	200	SY2	UFLK7408	$1,375.00
		5”	No	200	SY3	UFLK7410	$984.00
		8”	No	200	SY4	UFLK7414	$1,575.00
		12”	No	200	SY7	UFLK7418	$1,575.00
Vic300 (Old Style) Series Butterfly Valves	2-way	2”	No	300	AM	UFLK3300	$475.00
					SY1	UFLK3338	$672.00
					SY2	UFLK3342	$672.00
			Yes	300	AF	UFLK3300	$475.00
		2½”	No	300	AM	UFLK3308	$429.00
					SY1	UFLK3340	$672.00
					SY2	UFLK3344	$712.00
			Yes	300	AF	UFLK3308	$429.00
		3”	No	300	GM	UFLK3308	$429.00
					SY1	UFLK3340	$672.00
					SY2	UFLK3344	$712.00
			Yes	300	2*AF	UFLK3310	$429.00
					GK	UFLK3308	$429.00
		4”	No	300	2*GM	UFLK3316	$468.00
					SY2	UFLK3346	$725.00
			Yes	300	2*GK	UFLK3316	$468.00
		5”	No	300	SY2	UFLK3348	$672.00
		6”	No	300	SY3	UFLK3350	$725.00
		8”	No	300	SY4	UFLK3352	$725.00
		10”	No	300	SY4	UFLK3354	$725.00
		12”	No	300	SY4	UFLK3356	$672.00
	3-way	2”	No	300	GM	UFLK6300	$925.00
					SY1	UFLK6336	$925.00
					SY2	UFLK6340	$1,226.00
			Yes	300	AF	UFLK6300	$925.00
					GK	UFLK6300	$925.00
		2½”	No	300	GM	UFLK6308	$925.00
					SY1	UFLK6338	$925.00
					SY2	UFLK6342	$1,226.00
			Yes	300	2*AF	UFLK6310	$872.00
					GK	UFLK6308	$925.00
		3”	No	300	SY2	UFLK6342	$1,226.00
		4”	No	300	SY3	UFLK6344	$1,288.00
		5”	No	300	SY3	UFLK6346	$1,288.00
		6”	No	300	SY4	UFLK6348	$1,226.00
		8”	No	300	SY4	UFLK6350	$1,226.00
		10”	No	300	SY5	UFLK6352	$1,288.00
		12”	No	300	SY6	UFLK6354	$1,288.00

All close-off pressures listed are approximate and based on valve condition and application.

RETROFIT SOLUTIONS

067001- 04/13 - Subject to change. © Belimo Aircontrols (USA), Inc.

Specialty Solutions for Valve Manufacturers

Belimo offers specialty linkage solutions for the manufacturers in the chart below.
Please contact technical support for a quotation.

Valve Company	Valve Series	Valve Configuration
Apollo	141/143 Series Butterfly Valves	2-way
		3-way
Challenger	CH100 Series Butterfly Valves	2-way
		3-way
Chemtrol	PVC Model C Series Butterfly Valves	2-way
		3-way
Dezurik	BRS Series Butterfly Valves	2-way
		3-way
FNW	Figure 1000/2000 Series Butterfly Valves	2-way
		3-way
Gruvlok	Figure 7700 (Double D Shaft 2003 and Newer) Series Butterfly Valves	2-way
		3-way
	Figure 7700 (Sheared Pin Shaft Pre 2003) Series Butterfly Valves	2-way
		3-way
Hammond	61/62 Series Butterfly Valves	2-way
		3-way
Jamesbury	815 L/W Series Butterfly Valves	2-way
		3-way
	830 L/W Series Butterfly Valves	2-way
		3-way
Jenkins	22XXEXJ Series Butterfly Valves	2-way
		3-way
Metraflex	200 WOG Series Butterfly Valves	2-way
		3-way
Mueller	65/66 Series Butterfly Valves	2-way
		3-way
Quartermaster	42/44 Series Butterfly Valves	2-way
		3-way
Watts	DBF Series Butterfly Valves (pre 2009)	2-way
		3-way

Considerations:

- The kits above do not require a completed retrofit form. Only the make and model of the competitor valve is needed.
- Each linkage order is custom made and will take additional time to ship than a stock kit.
- Prices may vary with complexity of kit and material availability.
- Every retrofit solution is available in 2-way and 3-way configurations for both SY and damper style actuators.



067001 - 04/13 - Subject to change. © Belimo Aircontrols (USA), Inc.

Instructions for Completing this Form

Please keep in mind that all dimensions should be taken with ALL original actuation and hardware components removed from the valve body.

Examples of dimensions A & B **(Dim A and Dim B)** relate to the TOP mounting holes on the butterfly valve body. These holes are usually arranged on the body in either an "X" pattern (**MOUNT STYLE 1**), or a cross pattern (**MOUNT STYLE 2**). This information is entered on the UFSP Series Butterfly Valve Retrofit Form in the **MOUNT STYLE** section. The length of the valve stem sticking out of the top of the valve body is recorded under **Dim C**. The TOP mounting holes are usually drilled through the top flange, but sometimes are threaded. Enter this information on the form next to the mount style information previously recorded.

Next is the valve stem data. The five styles of valve stems cover 98% of the butterfly valves ever produced. Examine the valve being retrofitted to establish which shaft style matches the diagrams above. Use caution when recording these dimensions. Careless use of calipers will result in a sloppy and possibly dysfunctional linkage system. **Dim D** refers to the valve stem diameter and should be measured at several points up and down as well as around the stem itself. **Dim E** refers to the length of the drive surface available, whether it be a key, flatted surface, or the distance a drive hole is from the top of the stem. There are two types of keys (Keyway-Shaft Style 4 and Woodruff Key-Shaft Style 5). Please select the key size as noted in the column "For Shaft Style 4 & 5". **Dim F** refers to the width of the drive surface. This is the most critical dimension for correct linkage operation. Please measure accordingly.

In addition, we require information about the environment and process in which this linkage system will be utilized.

The form must be completed in its entirety to guarantee the complete, perfect fit of your retrofit system. Keep in mind that retrofit kits are designed with close-tolerance components which afford the most efficient linkage system for the facility. Measurements rounded to the nearest ⅛ or 1/16 inch will not perform as well (sometimes not at all) as a kit designed around careful measurements using proper equipment. Our designs are typically +.005" tolerance.

Required tools - calipers and retrofit form.

DISCLAIMER

We will do our best to provide a linkage system designed around your specifications and measurements however, we cannot be held responsible for linkages which do not fit as a result of incorrect data given to Belimo. We will re-work components which do not fit properly for a nominal fee.

To reduce the possibility of incorrect linkage solutions, we respectfully request that you fill out the retrofit form completely and forward that information with your order. This will serve as a double check between your valve and the actuator/linkage package designed for your application.

Actuation, weather shields and linkages cannot be pre-assembled at the Belimo factory prior to your receipt. The linkages are designed to be attached onto the valve body first, then optional weather shields, and finally actuation products.

Close-off pressures are calculated using actuator torque, valve stroke, and valve area. Other factors may affect the rated close-off pressures, including flow rates, system maintenance schedules, chemicals used in the shot feeder process, vicinity to pumps, condition of valve stem seals, and assembly of linkage material in the field.

Valves that are being considered for retrofit of actuation should be analyzed for their life expectancy before the retrofit has taken place. Valves that leak through stem seals or casings will continue to leak with the new linkage system in place, maybe even more so. Rebuilding the packing on these valves may be more costly than replacing the valves themselves. In some instances, older valve stem heights will require field modifications to the valve in order to utilize the retrofit kit. Belimo takes no responsibility for the operation of these valves after they have been modified.

067001 - 04/13 - Subject to change. © Belimo Aircontrols (USA), Inc.

MOUNT STYLE 1

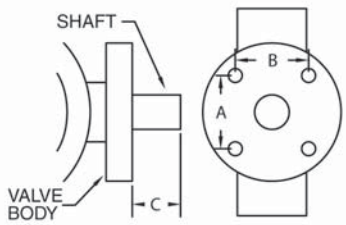

MOUNT STYLE 2

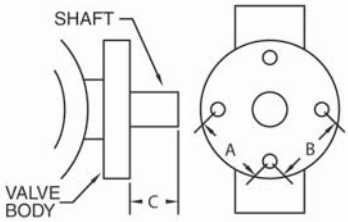

MOUNT STYLE DIMENSIONS

MOUNT STYLE

DIM A:

DIM B:

DIM C:

DIM. A & B MEASURED FROM CENTER OF HOLE

MOUNT STYLE 3

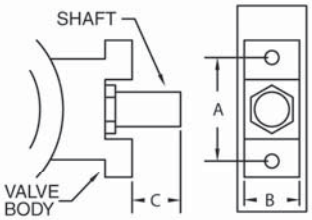

MOUNT STYLE 4

SKETCH YOUR MOUNT STYLE
USING MOUNT STYLE EXAMPLES.

MOUNTING HOLES:

DRILLED

DIA Ø:

THREAD

TAPPED

SPEC.

SHAFT STYLE 4

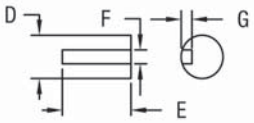

KEYWAY

KEY SIZE

.125" ☐

.1875" ☐

.250" ☐

.3125" ☐

.375" ☐

.4375" ☐

.500" ☐

SHAFT STYLE 5

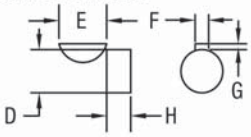

WOODRUFF KEY

CHECK ONE

SHAFT STYLE 6

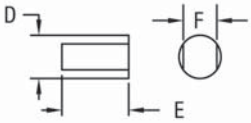

DOUBLE D

SHAFT STYLE 8

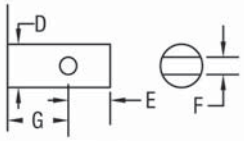

PINNED

SHAFT STYLE 9

VALVE CLOSED

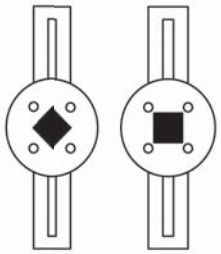

☐ ☐

CHECK ONE

SHAFT STYLE 7



HEX

SHAFT STYLE 9

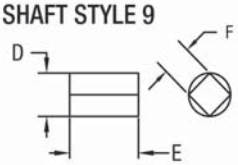

SQUARE

SHAFT STYLE ☐ DIM D: DIM E: DIM F: DIM G: DIM H:

ACTUATOR

EXISTING ACTUATOR MODEL: _____ CONTROL TYPE: ☐ ON/OFF ☐ FLOATING POINT ☐ VDC Range:_____ ☐ PWM Range:_____

FAIL SAFE: ☐ YES ☐ NO

FAIL POSITION: ☐ NO ☐ NC ☐ INDOOR ☐ OUTDOOR

VOLTAGE_____

COMPANY: _____ VALVE MANUFACTURE: _____ 2 WAY/3 WAY: _____

JOB NAME: _____ VALVE SERIES: _____ VALVE SIZE: _____

PO#: _____ VALVE MODEL: _____ MEDIA TEMP: _____

PHONE: _____ VALVE TAG/LOCATION: _____ MEDIA TYPE: _____

EMAIL: _____ QUANTITY: _____ SYSTEM PRESSURE: _____

NOTE: THIS INFORMATION WILL BE UTILIZED IN THE FABRICATION OF A CUSTOM LINKAGE SYSTEM FOR YOUR VALVE REQUIREMENT; THEREFORE, IT IS ESSENTIAL THAT THE ABOVE DIMENSIONS BE FURNISHED WITH READINGS TAKEN TO THE NEAREST .001". ANY ERRONEOUS DIMENSIONS FURNISHED WHICH RESULT IN IMPROPER FIT OF THIS LINKAGE SYSTEM ARE NOT THE RESPONSIBILITY OF BELIMO AIRCONTROLS. ANY REWORK REQUIRED WILL RESULT IN AN EXTRA CHARGE.

CUSTOM KITS ARE DESIGNED TO YOUR UNIQUE SPECIFICATIONS AND ARE NOT RETURNABLE.

COMPANY CONTACT/DIMENSIONS PROVIDED BY: _____ DATE: _____

067001 - 04/13 - Subject to change. © Belimo Aircontrols (USA), Inc.

2-way Single Actuator
Generic – Must complete BFV Retrofit Form

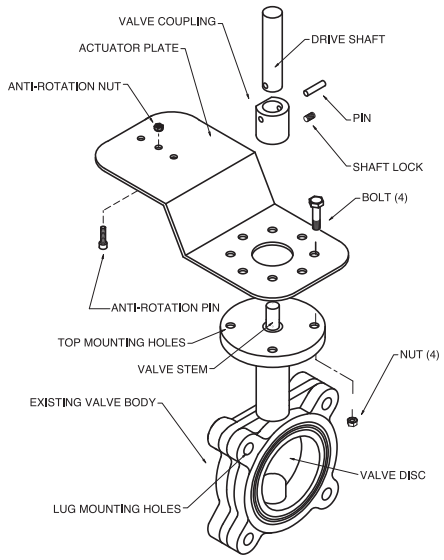

UFSP0000 $710.00

2-way Dual Actuator
Generic – Must complete BFV Retrofit Form

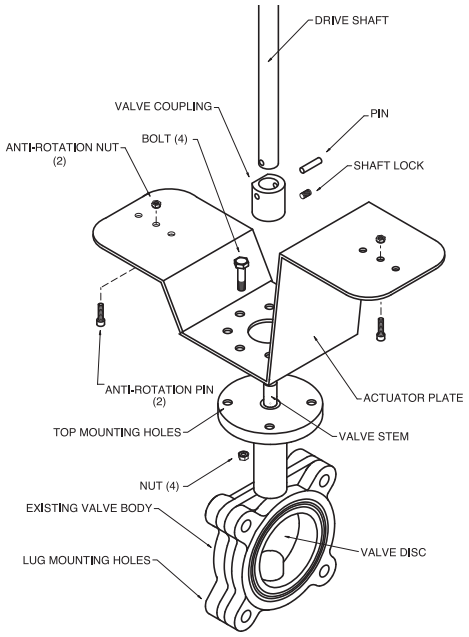

UFSP0008 $960.00

3-way Single Actuator
Generic – Must complete BFV Retrofit Form

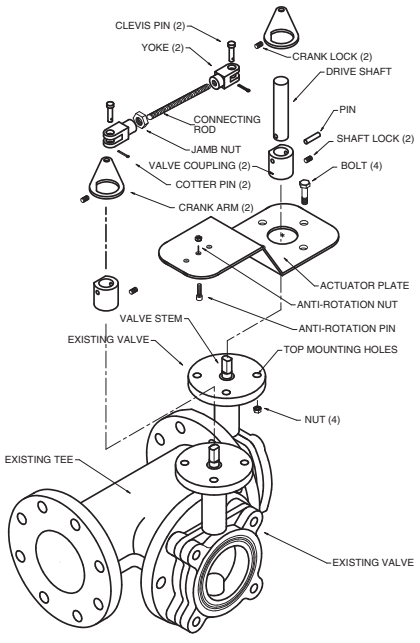

UFSP0002 $960.00

3-way Dual Actuator
Generic – Must complete BFV Retrofit Form

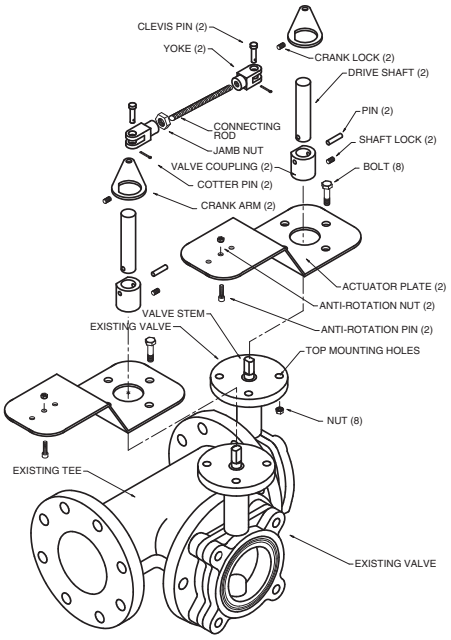

UFSP0010 $1,045.00

NOTE: 3-way bracket configuration shown is only one of many possible arrangements.
Custom kits are designed to your unique specification and are not returnable.

067001 - 04/13 - Subject to change. © Belimo Aircontrols (USA), Inc.

Industrial Electric 2-way
Generic – Must complete Butterfly Valve Retrofit Form

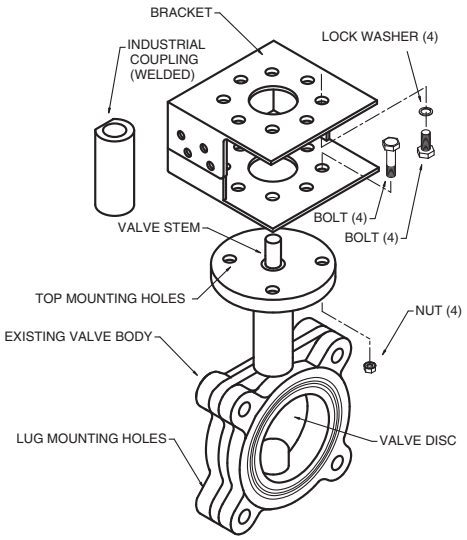

UFSP0020	**$864.00**	**SY1 - SY8**
UFSP0022	**$1,465.00**	**SY9 - SY12**

Industrial Electric 3-way
Generic – Must complete Butterfly Valve Retrofit Form

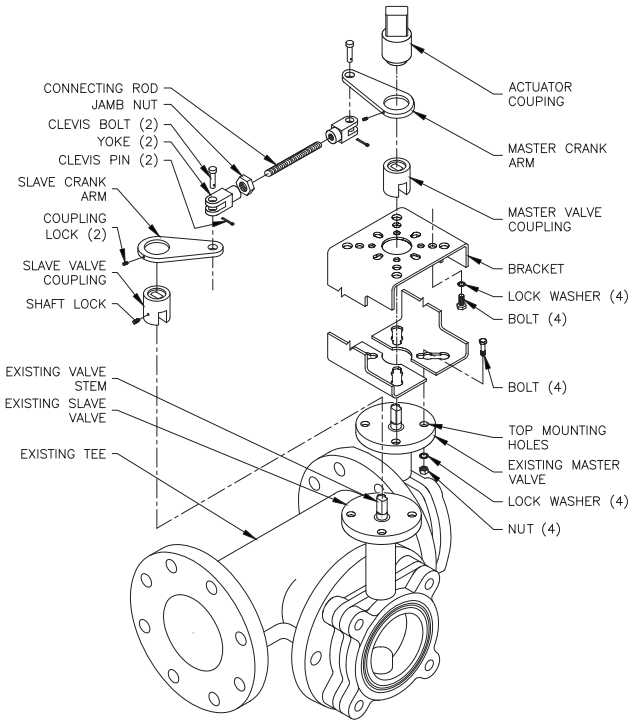

UFSP0024	**$1,525.00**	**SY1 - SY8**
UFSP0026	**$2,174.00**	**SY9 - SY12**

NOTE: 3-way bracket configuration shown is only one of many possible arrangements.
Custom kits are designed to your unique specification and are not returnable.

067001 - 04/13 - Subject to change. © Belimo Aircontrols (USA), Inc.

Instructions for Completing this Form

Ball valves with-out a mounting flange are typically not designed for installing actuation, therefore the valve design may not support modulation outside of manual usage. Belimo does not recommend retrofitting these types of ball valves.

All dimensions should be taken with ALL original actuation and hardware components removed from the valve body.

An example using **Mounting Style 3:** Dimensions A & B (**Dim A and Dim B**) relate to the TOP mounting holes on the ball valve body. These holes are usually arranged on the body in a "X" pattern (**MOUNT STYLE 3**). This information is entered on the UBSP Series Ball Valve Retrofit Form in the **MOUNT STYLE** section. The length of the valve stem sticking out of the top of the valve body is recorded under **Dim D and E**. The TOP mounting holes are usually drilled through the top flange, but sometimes are threaded. Enter this information on the form next to the mount style information previously recorded.

MOUNT STYLE 3: Dimensions A & B (**Dim A and Dim B**) relate to the TOP mounting holes on the ball valve body. These holes are usually arranged on the body in a "X" pattern (**MOUNT STYLE 3**). This information is entered on the UBSP Series Ball Valve Retrofit Form in the **MOUNT STYLE** section. The length of the valve stem sticking out of the top of the valve body is recorded under **Dim D and E**. The TOP mounting holes are usually drilled through the top flange, but sometimes are threaded. Enter this information on the form next to the mount style information previously recorded.

STEM STYLE: Examine the valve being retrofitted to establish which stem style matches the diagrams above. Use caution when recording these dimensions. **Dim H** refers to the valve stem diameter and should be measured at several points up and down as well as around the stem itself. **Dim E** refers to the length of the drive surface available, whether it is a key or flatted surface. **Dim F** refers to the width of the drive surface or the distance across the flats. This is the most critical dimension for correct linkage operation. Please measure accordingly. Lastly please specify the desired actuator orientation in reference to the valve body using the ports as reference, i.e. over the "A" port etc. We have also includes an ISO-5211 standard dimension chart for reference. If the valve is labeled please specify its "F" number so that we may confirm the dimensions per the ISO spec.

In addition, we require information about the environment and process in which this linkage system will be utilized. As well as the frequency of use the current actuator runs. This will help to ensure the longevity of the new linkage and actuator. Having the prior actuator spec and model will help.

The form must be completed in its entirety to guarantee the complete, perfect fit of your retrofit system. Keep in mind that retrofit kits are designed with close-tolerance components which afford the most efficient linkage systems. Measurements rounded to the nearest 1/8 or 1/16 inch will not perform as well (sometimes not at all) as a kit designed around careful measurements using proper equipment. Our designs are typically +.005" tolerance.

Required tools - calipers and retrofit form.

DISCLAIMER

We will do our best to provide a linkage system designed around your specifications and measurements however, we cannot be held responsible for linkages which do not fit as a result of incorrect data given to Belimo. We will re-work components which do not fit properly for a nominal fee.

To reduce the possibility of incorrect linkage solutions, we respectfully request that you fill out the retrofit form completely and forward that information with your order. This will serve as a double check between your valve and the actuator/linkage package designed for your application.

Actuation, weather shields and linkages cannot be pre-assembled at the Belimo factory prior to your receipt. The linkages are designed to be attached onto the valve body first, then optional weather shields, and finally actuation products.

Close-off pressures are calculated using actuator torque, valve stroke, and valve area. Other factors may affect the rated close-off pressures, including flow rates, system maintenance schedules, chemicals used in the shot feeder process, vicinity to pumps, condition of valve stem seals, and assembly of linkage material in the field.

Valves that are being considered for retrofit of actuation should be analyzed for their life expectancy before the retrofit has taken place. Valves that leak through stem seals or casings will continue to leak with the new linkage system in place, maybe even more so. Rebuilding the packing on these valves may be more costly than replacing the valves themselves. In some instances, older valve stem heights will require field modifications to the valve in order to utilize the retrofit kit. Belimo takes no responsibility for the operation of these valves after they have been modified.

067001 - 04/13 - Subject to change. © Belimo Aircontrols (USA), Inc.

MOUNT STYLE 1

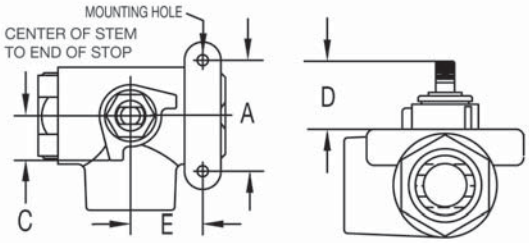

MOUNT STYLE 2

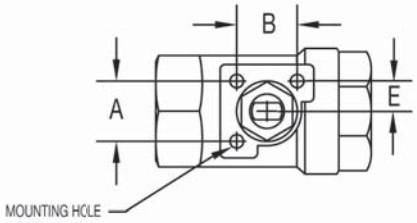

MOUNT STYLE 3

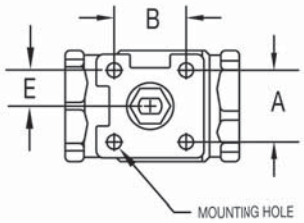

MOUNT STYLE 4

SKETCH YOUR MOUNT STYLE USING EXAMPLES ABOVE

MOUNT STYLE DIMENSIONS

MOUNT STYLE ☐

DIM A: ____

DIM B: ____

DIM C: ____

DIM D: ____

DIM E: ____

MOUNTING HOLES:

DRILLED

DIA Ø: ____

TAPPED

THREAD SPEC. ____

DIM. A & B MEASURED FROM CENTER OF HOLE

ISO STANDARD

ISO	BOLT SQUARE	BOLT SIZE Ø	CHECK ONE
F03	1.002	M5	
F04	1.169	M5	
F05	1.392	M6	
F07	1.949	M8	
F10	2.840	M10	
F12	3.480	M12	
F14	3.879	M16	
F16	4.593	M20	
F25	7.071	M16	

STEM STYLE 1

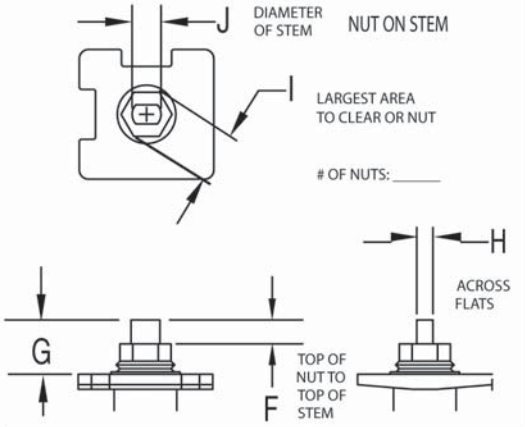

STEM STYLE 2

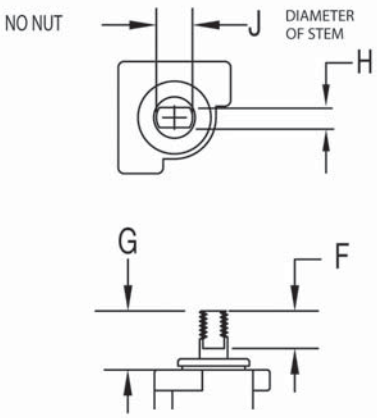

STEM STYLE 3

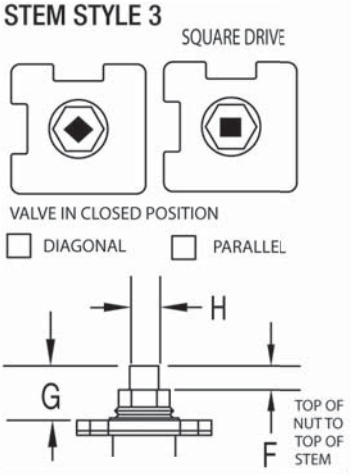

STEM STYLE ☐ DIM F: ____ DIM G: ____ DIM H: ____ DIM I: ____ DIM J: ____

ACTUATOR

EXISTING ACTUATOR MODEL: _____ CONTROL TYPE: ☐ ON/OFF ☐ FLOATING POINT ☐ VDC Range:____ ☐ PWM Range:____

FAIL SAFE: ☐ YES ☐ NO

FAIL POSITION: ☐ NO ☐ NC ☐ INDOOR ☐ OUTDOOR

FREQUENCY OF OPERATION (*specify how often*): DAILY____ WEEKLY____ MONTHLY____

VOLTAGE: ____

ACTUATOR ORIENTATION:



COMPANY: _____

JOB NAME: _____

PO#: _____

PHONE: _____

EMAIL: _____

VALVE MANUFACTURE: _____

VALVE SERIES: _____

VALVE MODEL: _____

VALVE TAG/LOCATION: _____

QUANTITY: _____

2 WAY/3 WAY: _____

VALVE SIZE: _____

MEDIA TEMP: _____

MEDIA TYPE: _____

SYSTEM PRESSURE: _____

NOTE: THIS INFORMATION WILL BE UTILIZED IN THE FABRICATION OF A CUSTOM LINKAGE SYSTEM FOR YOUR VALVE REQUIREMENT; THEREFORE, IT IS ESSENTIAL THAT THE ABOVE DIMENSIONS BE FURNISHED WITH READINGS TAKEN TO THE NEAREST .001". ANY ERRONEOUS DIMENSIONS FURNISHED WHICH RESULT IN IMPROPER FIT OF THIS LINKAGE SYSTEM ARE NOT THE RESPONSIBILITY OF BELIMO AIRCONTROLS. ANY REWORK REQUIRED WILL RESULT IN AN EXTRA CHARGE.

CUSTOM KITS ARE DESIGNED TO YOUR UNIQUE SPECIFICATIONS AND ARE NOT RETURNABLE.

COMPANY CONTACT/DIMENSIONS PROVIDED BY: _____ DATE: _____

067001 - 04/13 - Subject to change. © Belimo Aircontrols (USA), Inc.

Custom Ball Valve Retrofit Solutions

Component Identification

BELIMO

2 YEAR WARRANTY

2-way/3-way Single Actuator
Generic – Must Complete Ball Valve Retrofit Form

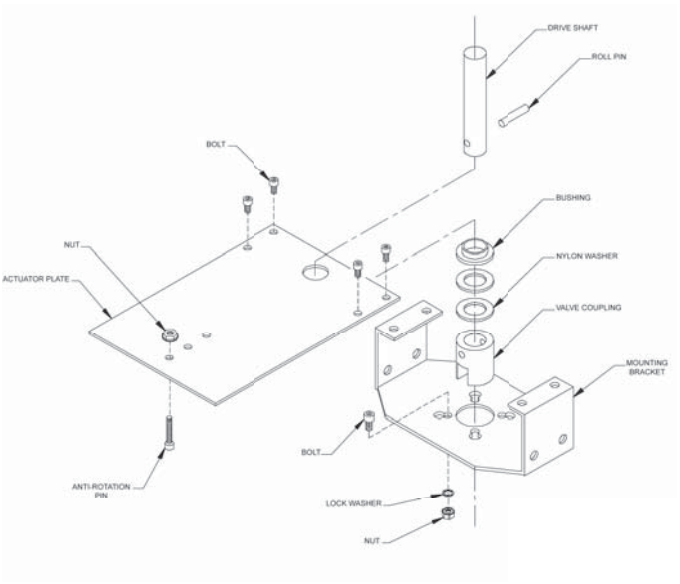

UBSP0004 **$696.00**

2-way/3-way Dual Actuator
Generic – Must Complete Ball Valve Retrofit Form

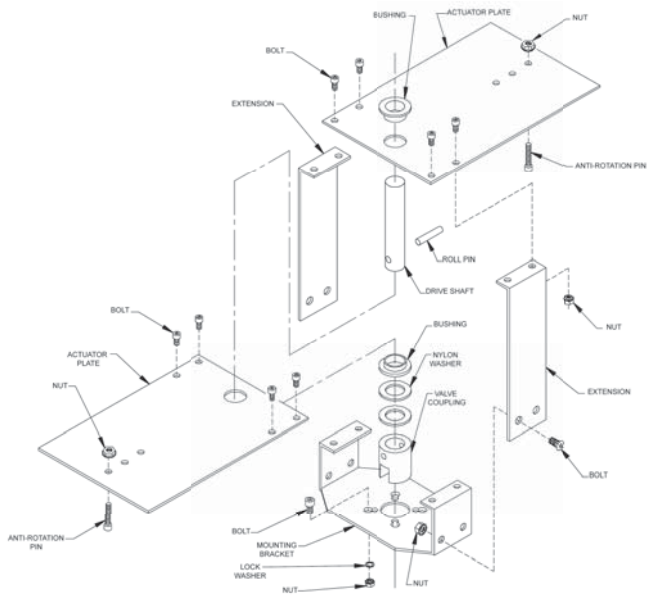

UBSP0006 **$946.00**

Industrial Electric 2-way/3-way
Generic – Must Complete Ball Valve Retrofit Form

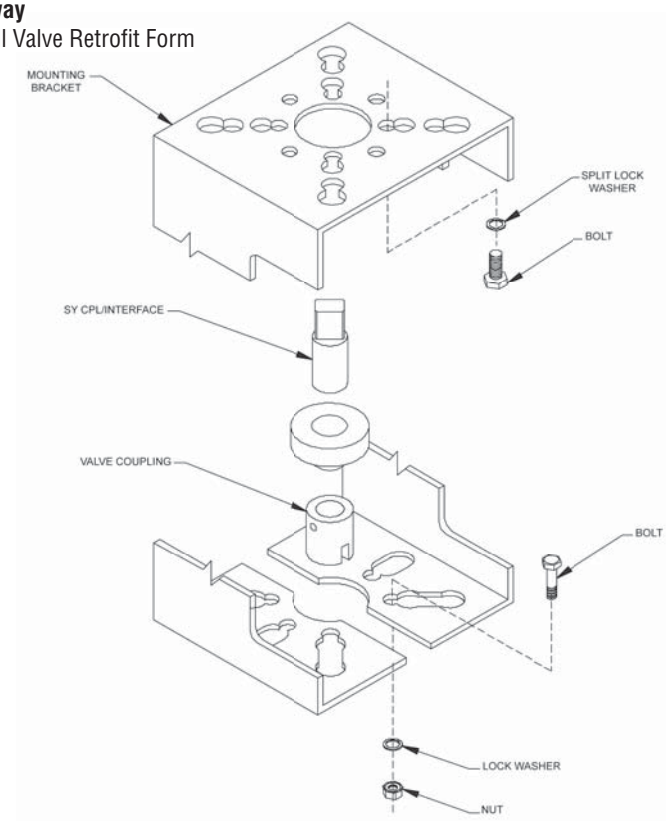

UBSP0008	**$864.00**	**SY1-SY6**
UBSP0012	**$1,450.00**	**SY7-SY9**

Custom kits are designed to your unique specification and are not returnable.

067001 - 04/13 - Subject to change. © Belimo Aircontrols (USA), Inc.

19 APPENDIX

- Valve Sizing and Selection
- Terms and Conditions of Sale and Warranty
- Valve Quotation Form
- Custom MFT Configuration Order Form
- Custom Ball Valve Retrofit Form
- Custom Globe Valve Retrofit Form
- Custom Butterfly Valve Retrofit Form
- Actuator and Valve Specification - *For latest version, visit: www.belimo.us*
- Belimo Platinum Distributors



History of Belimo

1975 Walter Burkhalter, Anton Heinrich Hütte, Ludwig and Walter Linsi, Werner Roner and Karl Stocker found BELIMO Automation AG in Gossau/ZH.
The actuator motor that is a world first is immediately received with acclaim.

1977 It becomes Belimo international, with the sales company in Germany.
The first fire and smoke damper actuators with mechanical spring return.

1979 The head office moves from Gossau/ZH to Wetzikon/ZH.

1984/85 The representative offices in the UK, Finland, Norway, Austria, Denmark, France, Sweden and the Netherlands are turned into independent sales companies (franchises)
Introduction of the VAV air volume flow control system.

1986 Assembly of the millionth actuator.

1989 Belimo Aircontrols USA is established.

1990 The Spanish affiliate is founded.

1993/94 The sales companies in Austria, Germany, the UK and France are turned into affiliates.
5 million actuators have been manufactured.

1995 Belimo is floated on the stock exchange and founds an affiliate in Canada.

1997 Belimo Hong Kong is founded and Lineg AG is acquired as a new affiliate.
Delivery of the 10 millionth actuator.

1998 Reorganization of the corporate structure to produce BELIMO Holding AG; production is started in Danbury/CT, USA.
Valve actuators for the new application area of water are developed and sold.

1999 **Belimo delivers the first ball valve with a novel type of characterizing disc.**

2000 The affiliate in Singapore opens its doors.
A new item on offer: Intelligently actuated globe valves.

2001 Affiliates are set up in Poland and Australia.
The Belimo innovation: Actuators with multifunction technology.

2002 Move to the new "Longus" company building and thus all the locations in the Zurich area are brought together by moving to Hinwil.
Visualization of VAV via PC-Tool.

2003 **Invention of the Pressure Independent Characterized Control Valve (PICCV) regulating valve.**

2005 The product generation with modularized actuators is introduced.

2006 An affiliate is founded in India and a sales company in Dubai (UAE).
The Norwegian franchise also becomes an affiliate of the Holding company and in Switzerland Lineg AG merges with BELIMO Automation AG Assembly of the 30 millionth actuator.

2007 **CM compact actuator:** a milestone in small damper actuation.
High Temperature Characterized Control Valve: environmentally friendly and suitable for use as a potable water control valve, a first ever for the Belimo product line.

2008 **Quick running actuators** are designed with the power, flexibility and efficiency that today's HVAC applications demand.
NEMA 4X Housing marks Belimo's first development of rugged actuators fro damper and valve applications.
Pipe Packages is a systematic way of piping HVAC terminal units that reduces the time. space and cost required to make the connection from the distribution piping in the building and the coil.

2009 **SelectPro** is the accurate sizing and selection tool designed with the power, flexibility and efficiency that today's HVAC applications.
NFB, NFX new generation actuators features a compact size, low power consumption, increased torque to 90 in-lbs (50% more compare to original NF series), and faster running times.
HD, HDU series butterfly valves a new ductile iron cast body providing a stronger construction ensuring better performance and reliabilty.

2010 Belimo builds a new 20,000-square foot production facility in **Sparks, NV**. With this building, Belimo has earned the LEED (Leadership in Energy and Environmental Design) Innovation in Design credit and is on track to receive **Gold Certification through LEED.**

2011 **EF Spring return actuator** offering higher torque offering (270 in-lbs) in a single, direct coupled actuator with a NEMA 4 (UL Type 4, IP 66) option to meet tough environmental conditions without having an additional housing.

UGSL1200 linkage easily attaches to the existing valve bonnet and accommodates either a Belimo CM non-spring return actuator or a TF spring return actuator.

2012 **Belimo Energy Valve™** a two-way pressure independent control valve that optimizes, documents, and proves water coil performance. Learn more at www.energyvalve.com

2013 **ZIP Economizer™** offering the fast route to reliable energy savings. ZIP Economizer is the most technologically advanced Airside Economizer solution with patented ZIP code High Limit setup, FDD, and alarm history.

PRESSURE DEPENDENT, ON/OFF ACTUATOR

APPLICABLE PRODUCTS

CCV, HTCCV, ZONE, GLOBE, BALL

REQUIRED INFORMATION

FOR SIZING:
- flow in GPM
- ΔP (if none given, utilize 1 psi or line size valve)

FOR SELECTION:
- 2-way or 3-way valve
- pipe size
- media temperature
- spring return or non-spring return
- required close-off pressure (COP)
- voltage requirement
- ambient temperature
- required accessories

EQUATIONS USED

$$C_v = \frac{Q^* \sqrt{G}}{\sqrt{\Delta P}} \qquad \Delta P = \left[\frac{Q^* \sqrt{G}}{C_v}\right]^2$$

C_v = required C_v
Q = flow in Gallons per Minute
G = Specific gravity of fluid (estimated as 1 for water systems)
ΔP = differential pressure over valve (deltaP) – stated in psi

PROCEDURE

1) calculate C_v
2) choose valve type (CCV, Zone, etc)
3) choose valve model number that has closest C_v rating
   (normally round down unless maximum ΔP for project is exceeded)
   a. refer to section 9 for CCV (F_p correction required)
   b. refer to section 10 for HTCCV
   c. refer to section 13 for Zone valves
   d. refer to section 14 for Globe valves
   e. refer to section 11 for Ball valves (F_p correction required)

NOTE: if valve selection requires piping correction factor (F_p), calculate C_v based on chart provided in section that shows appropriate C_v for pipe size selected.
- in general, do not select a valve less than ½ of the line size

4) now calculate actual ΔP based upon C_v of valve selected
5) if calculated ΔP is within project specified limits, proceed with actuator selection
6) if #5 is no, need to select a valve with a higher/lower C_v
7) select actuator based upon selection parameters above
8) based upon actuator/valve selection, verify close-off pressure (COP) meets project requirements

EXAMPLE OF CV CALCULATION

i.e GPM is 50
i.e ΔP = 1 psi

Cv = 50 GPM/sq rt of 1 psi
Cv = 50 GPM/1 = 50

$$C_v = \frac{50}{\sqrt{1}} = 50$$

PRESSURE DEPENDENT, PROPORTIONAL ACTUATOR

APPLICABLE PRODUCTS

CCV, HTCCV, ZONE, GLOBE, BALL

REQUIRED INFORMATION

FOR SIZING:
- flow in GPM
- ΔP (if none given, utilize 3-5 psi or match coil pressure drop)

FOR SELECTION:
- 2-way or 3-way valve
- pipe size
- media temperature
- spring return or non-spring return
- required close-off pressure (COP)
- voltage requirement
- ambient temperature
- required accessories

EQUATIONS USED

$$C_v = \frac{Q^* \sqrt{G}}{\sqrt{\Delta P}} \qquad \Delta P = \left[\frac{Q^* \sqrt{G}}{C_v}\right]^2$$

C_v = required C_v
Q = flow in Gallons per Minute
G = Specific gravity of fluid (estimated as 1 for water systems)
ΔP = differential pressure over valve (deltaP) – stated in psi

PROCEDURE

1) calculate C_v
2) choose valve type (CCV, Zone, etc)
3) choose valve model number that has closest C_v rating
   (normally round down unless maximum ΔP for project is exceeded)
   a. refer to section 9 for CCV (F_p correction required)
   b. refer to section 10 for HTCCV
   c. refer to section 13 for Zone valves
   d. refer to section 14 for Globe valves
   e. refer to section 11 for Ball valves (F_p correction required)
   - NOTE: if valve selection requires piping correction factor (F_p), calculate C_v based on chart provided in section that shows appropriate C_v for pipe size selected.
   - in general, do not select a valve less than ½ of the line size
4) now calculate actual ΔP based upon C_v of valve selected
5) if calculated ΔP is within project specified limits, proceed with actuator selection
6) if #5 is no, need to select a valve with a higher/lower C_v
7) select actuator based upon selection parameters above
8) based upon actuator/valve selection, verify close-off pressure (COP) meets project requirements

EXAMPLE OF CV CALCULATION

i.e. Pressure drop through the coil is 3 psi, then the pressure drop across the valve should be approximately 3 psi. Let us use 4 psi for example.
i.e. GPM is 50
i.e. ΔP = 4 psi

Cv = 50 GPM/sq rt of 4 psi
Cv = 50 GPM/2 = 25

$$C_v = \frac{50}{\sqrt{4}} = 25$$

APPENDIX

067001 - 04/13 - Subject to change. © Belimo Aircontrols (USA), Inc.

PRESSURE INDEPENDENT, ON/OFF, FLOATING ACTUATOR

APPLICABLE PRODUCTS

PICCV

REQUIRED INFORMATION

FOR SIZING:
flow in GPM

FOR SELECTION:
2-way valves only
pipe size
media temperature
spring return or non-spring return
required close-off pressure (COP)
voltage requirement
ambient temperature
required accessories

EQUATIONS USED

No equations are required. Choose the PICCV that has the closest GPM to the requirement and round up to next available flow.

PROCEDURE

1) Obtain required GPM
2) choose valve model number that has closest GPM rating (round up)
   - refer to section 7 for PICCV
3) verify that valve size is not larger than pipe size and in general, do not select a valve less than ½ of the line size
4) select actuator based upon selection parameters above
5) based upon actuator/valve selection, verify close-off pressure (COP) meets project requirements

EXAMPLE OF CV CALCULATION

87 GPM is needed – choose 90 GPM valve PICCV-50-090

PRESSURE INDEPENDENT, PROPORTIONAL ACTUATOR

APPLICABLE PRODUCTS

PICCV

REQUIRED INFORMATION

FOR SIZING:
flow in GPM

FOR SELECTION:
2-way valves only
pipe size
media temperature
spring return or non-spring return
required close-off pressure (COP)
voltage requirement
ambient temperature
required accessories

EQUATIONS USED

No equations are required. Choose the PICCV that has the closest GPM to the requirement and round up to next available flow.

PROCEDURE

1) Obtain required GPM
2) choose valve model number that has closest GPM rating (round up)
   - refer to section 7 for PICCV
3) verify that valve size is not larger than pipe size and in general, do not select a valve less than ½ of the line size
4) select actuator based upon selection parameters above
5) based upon actuator/valve selection, verify close-off pressure (COP) meets project requirements

EXAMPLE OF CV CALCULATION

87 GPM is needed – choose 90 GPM valve PICCV-50-090

067001 - 04/13 - Subject to change. © Belimo Aircontrols (USA), Inc.

LOW PRESSURE STEAM (15 PSI AND UNDER), ON/OFF ACTUATOR

APPLICABLE PRODUCTS

HTCCV, GLOBE, BALL

REQUIRED INFORMATION

FOR SIZING:
- flow in lb/hr
- ΔP (if none given, 10% psi or line size valve)
- Is it a 1/3 – 2/3 application?

FOR SELECTION:
- 2-way valve only
- pipe size
- media temperature
- spring return or non-spring return actuation
- required close-off pressure (COP)
- voltage requirement
- ambient temperature
- required accessories

EQUATIONS USED

$$C_v = \frac{Q}{3 * \sqrt{h * Po}}$$

C_v = Valve coefficient of flow
Q = #/hr steam
h = Pressure drop across open valve
– use 10% inlet pressure for on/off applications
Po = Outlet pressure in psia = P1-h
P1 = Absolute inlet pressure = gauge pressure (psig) + 14.7

PROCEDURE

1) calculate C_v using 10% inlet gauge pressure as h (differential pressure)
2) If this is a 1/3 – 2/3 application, you will select 2 valves. The first valve will be rated for 1/3 of the total flow (1/3 of required C_v rating) and the second valve will be rated for 2/3 of the total flow (2/3 of required C_v rating).
3) choose valve type (Ball, Globe, HTCCV, etc)
4) choose valve model number that has closest C_v rating (normally round down unless maximum ΔP for project is exceeded)
   a. refer to section 10 for HTCCV
   b. refer to section 14 for Globe valves
   c. refer to section 11 for Ball valves (Fp correction required)

NOTE: if valve selection requires piping correction factor (Fp), calculate C_v based on chart provided in section that shows appropriate C_v for pipe size selected.
- in general, do not select a valve less than ½ of the line size

5) now calculate actual ΔP based upon C_v of valve selected
6) if calculated ΔP is within project specified limits, proceed with actuator selection
7) if #6 is no, need to select a valve with a higher/lower C_v
8) select actuator based upon selection parameters above
9) based upon actuator/valve selection, verify close-off pressure (COP) meets project requirements

EXAMPLE OF C_v CALCULATION

Q = FLOW RATE Q = 1000 #/hr

Inlet psi = 15 psi

h = 10% (inlet psi) h = 0.10 (15) = 1.5

Po = (inlet psi + 14.7) – h Po = (15 + 14.7) – 1.5 = 28.2

Cv = 1000/(3*sqrt[1.5*28.2])
Cv = 1000/(3*6.50)
Cv = 1000/19.51

$$C_v = \frac{Q}{3 * \sqrt{h * Po}} = 51.25$$

Required Cv = 51.25

APPENDIX

067001 - 04/13 - Subject to change. © Belimo Aircontrols (USA), Inc.

LOW PRESSURE STEAM, (15 PSI AND UNDER) PROPORTIONAL ACTUATOR

APPLICABLE PRODUCTS

HTCCV, GLOBE, BALL

REQUIRED INFORMATION

FOR SIZING:
- flow in lb/hr
- ΔP (if none given, 80% psi of inlet pressure)
- Is it a 1/3 – 2/3 application?

FOR SELECTION:
- 2-way valve only
- pipe size
- media temperature
- spring return or non-spring return actuation
- required close-off pressure (COP)
- voltage requirement
- ambient temperature
- required accessories

EQUATIONS USED

$$C_v = \frac{Q}{3 * \sqrt{h * Po}}$$

C_v = Valve coefficient of flow
Q = #/hr steam
h = Pressure drop across open valve – use 80% of inlet pressure for proportional applications if inlet is under 15 psi
Po = Outlet pressure in psia = P1-h
P1 = Absolute inlet pressure = gauge pressure (psig) + 14.7

PROCEDURE

1) calculate C_v using 80% inlet gauge pressure as h (differential pressure)
2) If this is a 1/3 – 2/3 application, you will select 2 valves. The first valve will be rated for 1/3 of the total flow (1/3 of required C_v rating) and the second valve will be rated for 2/3 of the total flow (2/3 of required C_v rating).
3) choose valve type (Ball, Globe, HTCCV, etc)
4) choose valve model number that has closest C_v rating (normally round down unless maximum ΔP for project is exceeded)
   a. refer to section 10 for HTCCV
   b. refer to section 14 for Globe valves
   c. refer to section 11 for Ball valves

NOTE: if valve selection requires piping correction factor (Fp), calculate C_v based on chart provided in section that shows appropriate C_v for pipe size selected.
- in general, do not select a valve less than ½ of the line size

5) now calculate actual ΔP based upon C_v of valve selected
6) if calculated ΔP is within project specified limits, proceed with actuator selection
7) if #6 is no, need to select a valve with a higher/lower C_v
8) select actuator based upon selection parameters above
9) based upon actuator/valve selection, verify close-off pressure (COP) meets project requirements

EXAMPLE OF C_v CALCULATION

Q = FLOW RATE Q = 1000 #/hr

Inlet psi = 15 psi

h = 80% (inlet psi) h = 0.80 (15) = 12

Po = (inlet psi + 14.7) – h Po = (15 + 14.7) – 12 = 17.7

C_v = 1000/(3*sqrt[12*17.7])
C_v = 1000/(3*14.6)
C_v = 1000/43.7

$$C_v = \frac{Q}{3 * \sqrt{h * Po}} = 22.9$$

Required C_v = 22.9

APPENDIX

067001 - 04/13 - Subject to change. © Belimo Aircontrols (USA), Inc.

MEDIUM/HIGH PRESSURE STEAM, (ABOVE 15 PSI), ON/OFF ACTUATOR

APPLICABLE PRODUCTS

GLOBE, BALL

REQUIRED INFORMATION

FOR SIZING:
- flow in lb/hr
- ΔP (if none given, 10% psi or line size valve)
- Is it a 1/3 – 2/3 application?

FOR SELECTION:
- 2-way valve only
- pipe size
- media temperature
- spring return or non-spring return actuation
- required close-off pressure (COP)
- voltage requirement
- ambient temperature
- required accessories

EQUATIONS USED

$$C_v = \frac{Q}{3 * \sqrt{h * Po}}$$

C_v = Valve coefficient of flow
Q = #/hr steam
h = Pressure drop across open valve
– use 10% inlet pressure for on/off applications
Po = Outlet pressure in psia = P1-h
P1 = Absolute inlet pressure = gauge pressure (psig) + 14.7

PROCEDURE

1) calculate C_v using 10% inlet pressure as h (differential pressure)
2) If this is a 1/3 – 2/3 application, you will select 2 valves. The first valve will be rated for 1/3 of the total flow (1/3 of required C_v rating) and the second valve will be rated for 2/3 of the total flow (2/3 of required C_v rating).
3) choose valve type (Ball, Globe, HTCCV, etc)
4) choose valve model number that has closest C_v rating (normally round down unless maximum ΔP for project is exceeded)
   a. refer to section 14 for Globe valves
   b. refer to section 11 for Ball valves

NOTE: if valve selection requires piping correction factor (Fp), calculate C_v based on chart provided in section that shows appropriate C_v for pipe size selected.
- in general, do not select a valve less than ½ of the line size

5) now calculate actual ΔP based upon C_v of valve selected
6) if calculated ΔP is within project specified limits, proceed with actuator selection
7) if #6 is no, need to select a valve with a higher/lower C_v
8) select actuator based upon selection parameters above
9) based upon actuator/valve selection, verify close-off pressure (COP) meets project requirements

EXAMPLE OF C_v CALCULATION

Q = FLOW RATE Q = 1000 #/hr

Inlet psi = 40 psi

h = 10% (inlet psi) h = 0.10 (40) = 4

Po = (inlet psi + 14.7) – h Po = (40 + 14.7) – 4 = 50.7

C_v = 1000/(3*sqrt[4*50.7])
C_v = 1000/(3*14.3)
C_v = 1000/42.7

$$C_v = \frac{Q}{3 * \sqrt{h * Po}} = 23.41$$

Required C_v = 23.42

APPENDIX

067001 - 04/13 - Subject to change. © Belimo Aircontrols (USA), Inc.

MEDIUM/HIGH PRESSURE STEAM, (ABOVE 15 PSI), PROPORTIONAL ACTUATOR

APPLICABLE PRODUCTS

GLOBE, BALL

REQUIRED INFORMATION

FOR SIZING:
- flow in lb/hr
- ΔP (if none given, 42% psi of absolute inlet pressure)
- Is it a 1/3 – 2/3 application?

FOR SELECTION:
- 2-way valve only
- pipe size
- media temperature
- spring return or non-spring return actuation
- required close-off pressure (COP)
- voltage requirement
- ambient temperature
- required accessories

EQUATIONS USED

$$C_v = \frac{Q}{3 * \sqrt{h * P_o}}$$

C_v = Valve coefficient of flow
Q = #/hr steam
h = Pressure drop across open valve – use 42% of absolute inlet pressure for proportional applications
h= 0.42(Pi+14.7)
Po = Outlet pressure in psia = P1-h
P1 = Absolute inlet pressure = gauge pressure (psig) + 14.7

PROCEDURE

1) calculate C_v using 42% absolute inlet pressure as h (differential pressure)
2) If this is a 1/3 – 2/3 application, you will select 2 valves. The first valve will be rated for 1/3 of the total flow (1/3 of required C_v rating) and the second valve will be rated for 2/3 of the total flow (2/3 of required C_v rating).
3) choose valve type (Ball, Globe, HTCCV, etc)
4) choose valve model number that has closest C_v rating (normally round down unless maximum ΔP for project is exceeded)
   a. refer to section 14 for Globe valves
   b. refer to section 11 for Ball valves

NOTE: if valve selection requires piping correction factor (Fp), calculate C_v based on chart provided in section that shows appropriate C_v for pipe size selected.
- in general, do not select a valve less than ½ of the line size

5) now calculate actual ΔP based upon C_v of valve selected
6) if calculated ΔP is within project specified limits, proceed with actuator selection
7) if #6 is no, need to select a valve with a higher/lower C_v
8) select actuator based upon selection parameters above
9) based upon actuator/valve selection, verify close-off pressure (COP) meets project requirements

EXAMPLE OF C_v CALCULATION

Q = FLOW RATE Q = 1000 #/hr

Pi = inlet psi Pi = 40 psi

h = pressure drop across open valve – use 42% of absolute inlet pressure for proportional applications
h = 0.42 (40 + 14.7) = 22.97

Po = (outlet pressure in psia + 14.7) – h
Po = (40 + 14.7) – 22.97 = 31.73

C_v = 1000/(3*sqrt[22.97*31.73])
C_v = 1000/(3*26.99)
C_v = 1000/80.97

$$C_v = \frac{Q}{3 * \sqrt{h * P_o}} = 12.35$$

Required C_v = 12.35

APPENDIX

067001 - 04/13 - Subject to change. © Belimo Aircontrols (USA), Inc.

PRESSURE DEPENDENT, ON/OFF, ACTUATOR

APPLICABLE PRODUCTS

Butterfly Valve HD/HDU Series
Butterfly Valve High Performance –SHP Series

REQUIRED INFORMATION

FOR SIZING:
- flow in GPM
- pipe size

FOR SELECTION:
- 2-way or 3-way valve
- pipe size
- media temperature
- spring return or non-spring return
- required close-off pressure (COP)
- voltage requirement
- ambient temperature
- required accessories

EQUATIONS USED

No equations are used. Use Velocity Chart below.

PROCEDURE

1) To select the proper valve, find required GPM on the chart.
2) Choose valve that does not exceed 12 ft/sec for the HD/HDU series or 32 ft/sec for the SHP Series.
3) Verify valve selection is not too large or small for the pipe size.
4) Verify Close-off Pressure (COP) is sufficient for the application.

NOTES

1) Most butterfly valves are line size and piping geometry is not considered. If valve size must be reduced, a recommendation is to select a valve only one size less than the pipe. Do not exceed valve type fluid velocity limits.
2) For a two-position Butterfly valve, the C_v is determined at 90°open.
3) Determine the close-off rating and choose either a Full Rated (HD) or Undercut (HDU) version. Full rated valves have a close-off rating equivalent to the valve body rating (most are 200 psi), with the exception of 150 psi close-off for the 14" Butterfly valves and above. The Undercut versions have a close-off rating of 50 psi. See Butterfly selection models for the ratings.
4) Determine the type of actuation for your application involved.
5) Consult Belimo Customer Service for Butterfly applications involving steam, high velocity requirements, etc.

EXAMPLE

Application requires a 2-way, 400 GPM Butterfly valve, a valve of 4" minimum would be selected. The 4" valve at 12 ft/second would be able to withstand a capacity of 470 GPM, without damage to the liner.

FOR HD/HDU SERIES

Flow in Std Weight Pipe (Fluid Velocity in GPM). Use with HD/U Butterfly Valves.

SIZE	2 FPS	4 FPS	6 FPS	8 FPS	10 FPS	12 FPS	14 FPS ✕	16 FPS ✕
2"	19	39	59	78	98	117	137	157
2½"	30	61	92	122	153	184	214	245
3"	44	88	132	176	220	264	308	353
4"	78	157	235	313	392	470	548	627
5"	122	245	367	490	612	734	857	979
6"	176	352	529	705	881	1058	1234	1410
8"	313	627	940	1253	1567	1880	2193	2507
10"	490	979	1469	1958	2448	2738	3427	3917
12"	705	1410	2115	2820	3525	4230	4935	5640
14"	959	1919	2879	3838	4798	5758	6717	7677
16"	1253	2507	3760	5013	6267	7520	8774	10027
18"	1586	3173	4759	6345	7931	9518	11104	12690
20"	1958	3917	5875	7834	9792	11750	13709	15668
24"	2820	5640	8460	11280	14100	16921	19741	22561
30"	4406	8813	13220	17625	22032	26438	30845	35251

It is not recommended to exceed 12 feet per second through resilient seat butterfly valves. Velocities greater than 12 fps may damage the valve liner and disc.

FOR SHP SERIES

Flow in Std Weight Pipe (Fluid Velocity in GPM). Use with SHP Series Butterfly Valves.

SIZE	4 FPS	8 FPS	12 FPS	16 FPS	20 FPS	24 FPS	28 FPS	32 FPS	36 FPS ✕
2"	39	78	118	157	196	235	274	313	353
2½"	61	122	184	245	306	367	428	490	551
3"	88	176	264	353	441	529	617	705	793
4"	157	313	470	627	783	940	1097	1253	1410
5"	245	490	734	979	1224	1469	1714	1958	2203
6"	352	705	1058	1410	1763	2115	2468	2820	3173
8"	627	1253	1880	2507	3133	3760	4387	5013	5640
10"	979	1958	2938	3917	4896	5875	6854	7834	8813
12"	1410	2820	4230	5640	7050	8460	9870	11280	12690
14"	1919	3838	5738	7677	9596	11515	13435	15354	17273
16"	2507	5013	7520	10027	12534	15040	17547	20054	22561
18"	3173	6345	9518	12690	15863	19036	22208	25381	28553
20"	3917	7834	11750	15667	19584	23501	27418	31334	35251
24"	5640	11280	16921	22561	28201	33841	39481	45121	50762
30"	8813	17625	26438	35251	44064	52877	61689	70502	79315

It is not recommended to exceed 32 feet per second through high performance butterfly valves. Velocities greater than 32 fps may damage the valve.

067001 - 04/13 - Subject to change. © Belimo Aircontrols (USA), Inc.

Valve Sizing – Water Applications

Using Velocity Method

BELIMO

PRESSURE DEPENDENT, PROPORTIONAL ACTUATOR

APPLICABLE PRODUCTS

Butterfly Valve HD/HDU Series
Butterfly Valve High Performance–SHP Series

REQUIRED INFORMATION

FOR SIZING:
- flow in GPM
- pipe size

FOR SELECTION:
- 2-way or 3-way valve
- pipe size
- media temperature
- spring return or non-spring return
- required close-off pressure (COP)
- voltage requirement
- ambient temperature
- required accessories

EQUATIONS USED

No equations are used. Use Velocity Chart below.

PROCEDURE

1) To select the proper valve, find required GPM on the chart.
2) Choose valve that does not exceed 12 ft/sec for the HD/HDU series or 32 ft/sec for the SHP Series.
3) Verify valve selection is not too large or small for the pipe size.
4) Verify Close-off Pressure (COP) is sufficient for the application.

NOTES

1) Most butterfly valves are line size and piping geometry is not considered. If valve size must be reduced, a recommendation is to select a valve only one size less than the pipe. Do not exceed valve type fluid velocity limits.
2) For a modulating Butterfly valve, the C_v rating is determined at 60° open.
3) Determine the close-off rating and choose either a Full Rated (HD) or Undercut (HDU) version. Full rated valves have a close-off rating equivalent to the valve body rating (most are 200 psi), with the exception of 150 psi close-off for the 14" Butterfly valves and above. The Undercut versions have a close-off rating of 50 psi. See Butterfly selection models for the ratings.
4) Determine the type of actuation for your application involved.
5) Consult Belimo Customer Service for Butterfly applications involving steam, high velocity requirements, etc.

EXAMPLE

Application requires a 2-way, 400 GPM Butterfly valve, a valve of 4" minimum would be selected. The 4" valve at 12 ft/second would be able to withstand a capacity of 470 GPM, without damage to the liner.

FOR HD/HDU SERIES

Flow in Std Weight Pipe (Fluid Velocity in GPM). Use with HD/U Butterfly Valves.

SIZE	2 FPS	4 FPS	6 FPS	8 FPS	10 FPS	12 FPS	14 FPS ✕	16 FPS ✕
2"	19	39	59	78	98	117	137	157
2½"	30	61	92	122	153	184	214	245
3"	44	88	132	176	220	264	308	353
4"	78	157	235	313	392	470	548	627
5"	122	245	367	490	612	734	857	979
6"	176	352	529	705	881	1058	1234	1410
8"	313	627	940	1253	1567	1880	2193	2507
10"	490	979	1469	1958	2448	2738	3427	3917
12"	705	1410	2115	2820	3525	4230	4935	5640
14"	959	1919	2879	3838	4798	5758	6717	7677
16"	1253	2507	3760	5013	6267	7520	8774	10027
18"	1586	3173	4759	6345	7931	9518	11104	12690
20"	1958	3917	5875	7834	9792	11750	13709	15668
24"	2820	5640	8460	11280	14100	16921	19741	22561
30"	4406	8813	13220	17625	22032	26438	30845	35251

It is not recommended to exceed 12 feet per second through resilient seat butterfly valves. Velocities greater than 12 fps may damage the valve liner and disc.

FOR SHP SERIES

Flow in Std Weight Pipe (Fluid Velocity in GPM). Use with SHP Series Butterfly Valves.

SIZE	4 FPS	8 FPS	12 FPS	16 FPS	20 FPS	24 FPS	28 FPS	32 FPS	36 FPS ✕
2"	39	78	118	157	196	235	274	313	353
2½"	61	122	184	245	306	367	428	490	551
3"	88	176	264	353	441	529	617	705	793
4"	157	313	470	627	783	940	1097	1253	1410
5"	245	490	734	979	1224	1469	1714	1958	2203
6"	352	705	1058	1410	1763	2115	2468	2820	3173
8"	627	1253	1880	2507	3133	3760	4387	5013	5640
10"	979	1958	2938	3917	4896	5875	6854	7834	8813
12"	1410	2820	4230	5640	7050	8460	9870	11280	12690
14"	1919	3838	5738	7677	9596	11515	13435	15354	17273
16"	2507	5013	7520	10027	12534	15040	17547	20054	22561
18"	3173	6345	9518	12690	15863	19036	22208	25381	28553
20"	3917	7834	11750	15667	19584	23501	27418	31334	35251
24"	5640	11280	16921	22561	28201	33841	39481	45121	50762
30"	8813	17625	26438	35251	44064	52877	61689	70502	79315

It is not recommended to exceed 32 feet per second through high performance butterfly valves. Velocities greater than 32 fps may damage the valve.

067001 - 04/13 - Subject to change. © Belimo Aircontrols (USA), Inc.

MODELS OF VALVES/APPLICATIONS							
FLOW MEDIUM	**PICCV**	**CCV**	**HTCCV**	**BALL**	**GLOBE**	**BUTTERFLY**	**ZONE VALVES**
Chilled / Hot Water / Glycol	PICCV-XX-XXX 2-way only	B2(B), B3(B), B6	B2...HT	B2VS, B2VSS B3VS, B6VS	G2, G3(D), G6, G7(D), G6C Series	F6, F7… HD, HDU SHP	Z2
3-Way Mixing		B3(B)		B3VS	G3, G7	F7, HD/HDU, SHP	
3-Way Diverting		B3(B)		B3VS	G3D, G7D	F7, HD/HDU, SHP	Z3
Low Pressure Steam (up to 15 inlet psi)			B2...HT	B2VS	G2, G6, G6C	F6 ...SHP	
Medium Pressure Steam (15–50 inlet psi)				B2VS (up to 35 psi only) B2VSS	G2/UGLK up to (35 inlet psi only) G2S/UNV-035, G6, G6C (35 psi only), G6S, G6CS	F6 ...SHP	
High Pressure Steam (50-100 inlet psi)					G2S + UGLK-SS-Kit, G6S, G6CS		
ANSI 250/300					G2, G2S, G3, G3D, G6(S)-250, G7(D)-250	F6, F7… -300SHP	

067001 - 04/13 - Subject to change. © Belimo Aircontrols (USA), Inc.

Control Valve Seat Leakage Classifications (In accordance with ANSI B16.104)

Leakage Class Designation	Maximum Leakage Allowable	Test Medium	Test Pressure	Testing Procedures Required for Establishing Rating
I	XXX	XXX	XXX	No test required provided user and supplier so agree
II	0.5% of rated capacity	Air or water at 50 to 125°F (10 to 52°C)	45-60 psig or max. operating differential whichever is lower.	Pressure applied to valve inlet with outlet open to atmosphere or connected to a low head loss measuring device full normal closing thrust provided by actuator
III	0.1% of rated capacity	As above	As above	As above
IV	0.01% of rated capacity	As above	As above	As above
V	0.0005 ml per minute of water per inch of port diameter per psi differential.	Water at 50 to 125°F (10 to 52°C)	Max service pressure drop across valve plug, not to exceed ANSI body rating (100 psi pressure drop minimum).	Pressure applied to valve inlet after filling entire body cavity and connected piping with water and stroking valve plug closed. Use net specified max actuator thrust, but no more, even if available during test. Allow time for leakage flow to stabilize.
VI	Not to exceed in following table based on port diameter.	Air or nitrogen at 50 to 125°F (10 to 52°C)	50 psig or max rated amounts across valve plug shown whichever is lower.	Actuator should be adjusted to operating differential pressure conditions specified with full normal closing thrust applied to valve plug seat. Allow time for leakage flow to stabilize and use suitable measuring device.

Control Valve Seat Leakage Classifications (In accordance with ANSI B 16.104)

NOMINAL PORT DIAMETER		LEAK RATE	LEAK RATE
Inches	Millimeters	ml per Minute	Bubbles / minute
1	26	0.15	1
1½	36	0.3	2
2	51	0.45	3
2½	64	0.6	4
3	76	0.9	6
4	102	1.7	11
6	152	4	27
8	203	6.75	45

067001 - 04/13 - Subject to change. © Belimo Aircontrols (USA), Inc.

Water Quality Recommended Parameters

Chilled Water, Closed Loops, and Hot Water Systems up to 212°F (100°C)						
8.0			<	**pH**	<	10.3
				Conductivity	<	3000 MMHS
				Iron	<	0.5 ppm
				Copper	<	0.5 ppm
Chilled Systems	➡	100 ppm	<	**Molybdenum** (Mild Steel Corrosion Inhibitor)	<	150 ppm
Hot Systems	➡	200 ppm	<	**Molybdenum** (Mild Steel Corrosion Inhibitor)	<	250 ppm
		400 ppm	<	**Nitrite** (Mild Steel Corrosion Inhibitor)	<	1000 ppm
				Azole (Yellow Metal Inhibitor)	>	5 ppm free and available
				Total Aerobic Bacteria	<	1000 cells/ml
				Anaerobic Bacteria	<	50 cells/ml
				Ammonia	<	2 ppm
				Turbidity (in systems not containing a dye)	<	20 FTU's
				Particles (0.5 micron particles/ml with no particles above 20 microns)	<	200,000
				Polymer	<	10 ppm

Use water with low levels of chloride and sulfate, less than 25 ppm. Water hardness should be less than 50 ppm of hard water ions (Ca‡, Mg‡). When water hardness is at unacceptable levels, a water softener expert should be consulted.

Maximum Temperature and Pressure Ratings for Flanged Globe Valve Bodies

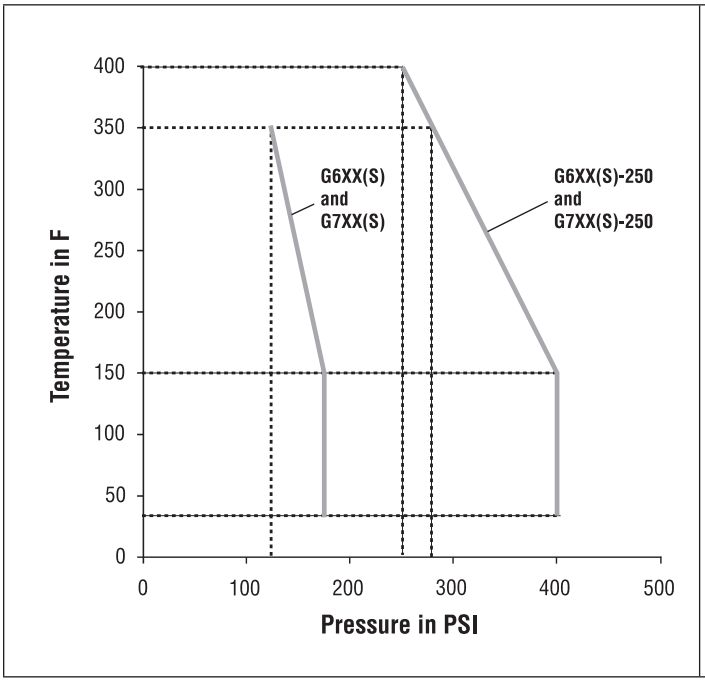

Pressure/Temperature Chart for ANSI Class Butterfly Valves

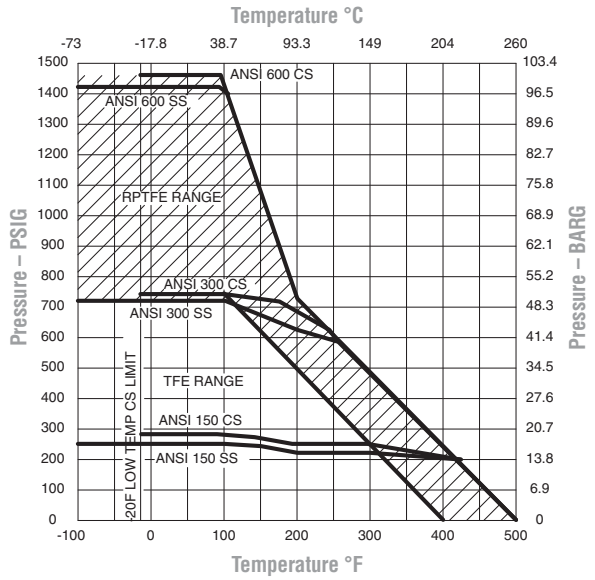

067001 - 04/13 - Subject to change. © Belimo Aircontrols (USA), Inc.

Terms and Conditions

General

1.1. The following Terms and Conditions of Sale ("Terms") apply to the sale of products described in this Product Guide ("Products"). As used herein, "Seller" or "Belimo" refers to Belimo Aircontrols (USA) Inc. or Belimo Aircontrols (CAN) Inc., as applicable, and "Client" refers to the individual or business entity that purchases the Products from Seller. These Terms shall apply unless the parties mutually agree to different terms and memorialize such agreement in a writing signed by both Client and Seller.

II. Price

2.1. The Seller's price for Products (the "Price") is net, F.O.B. Point of Origin, and is calculated in US currency for sales made by Belimo Aircontrols (USA), Inc. and calculated in Canadian currency for sales made by Belimo Aircontrols (CAN) Inc.

2.2. The Price, unless otherwise agreed upon, does not include freight and packaging (wooden crates, pallets, etc), the costs of which will be charged to Client at cost for each shipment and shall be payable with payment of the Price.

2.3. Orders for Products with a net value of less than US $300 (CAN $300) will be subject to a US $20 (CAN $20) handling fee (the "Handling Fee"). The Handling Fee will not be charged for orders of Products with a net value equal to or greater than US $300 (CAN $300) or for Products ordered through Seller's internet ordering system at: www.belimo.com.

2.4. Seller reserves the right to make partial deliveries of orders of Products, each of which deliveries may be invoiced separately by Seller.

2.5. The Price does not include charges for wiring diagrams, installation, and commissioning, which will be charged to Client separately and will be payable on demand.

III. Payment

3.1. Invoices are payable in US currency for sales made by Belimo Aircontrols (USA), Inc. and in Canadian currency for sales made by Belimo Aircontrols (CAN) Inc. and are due no later than 30 days from the date of invoice, without any deductions.

3.2. If Client fails to pay the entire invoice balance within 60 days from the date of the invoice, Client will be subject to an interest charge of 2% per month (or the maximum rate permitted by law, whichever is less) on the outstanding unpaid balance due to Seller.

3.3. Clients who maintain outstanding balances for 45 days or more after the date of invoice may be subject to restricted shipments of Products or may be required to pay for all future deliveries of Products on a cash-on-delivery basis.

IV. Title and Risk

4.1. Title to all Products shall remain with Seller and shall not pass to Client until Seller has received full payment for the Products.

V. Damage or Loss in Transit

5.1. Seller assumes no liability for damage or loss of shipment of Products, which risk shall at all times remain with the carrier. All shipments must be unpacked and examined by Client immediately upon receipt. Any external evidence of loss or damage must be noted on the freight bill accompanying the shipment of Products or carrier's receipt and signed by the carrier's agent at the time of delivery. Failure to do so will result in the carrier's refusal to honor any claim relating to damage of Products. Client must also notify Seller of such damage by providing Seller with a copy of the freight bill or damage report so that Seller can file a claim for loss or damage in transit with the carrier. If the damage does not become apparent until the shipment is unpacked, Client must make a request for inspection by the carrier's agent and file with the carrier within 15 days after receipt of product and notify Seller of the same. Seller is not liable for consequential damage to Client's property or a third-party's property resulting from the installation of damaged Products.

VI. Delivery

6.1. Seller undertakes to make every attempt to adhere to its stated delivery parameters and to make a timely delivery of the Products but does not guarantee any delivery specifications. Each contract entered into for the purchase of Products is not cancelable nor is Seller liable for any direct or indirect losses that may arise, for any reason whatsoever, due to Seller's failure to meet any stated or assumed delivery schedules.

VII. Return of Goods

7.1. Products received by Client cannot be returned unless: (i) Client alerts Seller that it intends to return such Products, (ii) Seller agrees to accept the return of such Products, (iii) Client obtains a Return Material Authorization ("RMA") number from Seller for the return of such Products, and (iv) Client follows all return instructions provided by the Seller. The RMA number must be clearly written on the outside of all packaging for any returned Products. Only Products returned to the proper location as instructed by Seller and identified with an RMA number will be considered for credit.

7.2. Only Products that are returned in original packaging may be accepted for return. All returned Products must be shipped to Seller at Client's cost. Such returned Products must be received must be received within 1 yr. from original sale date, in as-new condition, adequate for resale as new Products to qualify for credit. Client will be responsible for payment of a restocking charge for all returned Products in an amount no less than 20% of the invoice value of the Products ("Restocking Charges"). Product received damaged or showing evidence of having been installed will be refused or assessed a higher restocking charge. Custom kits designed to a Client's unique specifications are not returnable. If Client requests product to be returned to them, the Client will be responsible for return shipping charges. See specific product literature for exclusions or exceptions.

7.3. Returns that result from Seller errors will be credited in full and will not be subject to Restocking Charges.

VIII. Warranty

VIII.A 5-year Warranty

8.1. Products that are listed in this Product Guide as carrying a 5-year warranty to a location in the United States or Canada shall carry a 5-year warranty. The 5-year warranty is unconditional for the first two years from the date of production of the Products. After the first two years from the date of Production, the warranty shall be conditional and the warranty coverage shall not apply to damage to Products caused by ordinary wear and tear, negligence or improper use by Client, or other causes beyond the control of the Seller. Product specific terms of warranty with regard to warranty period or conditions of warranty may apply to certain specified Products as stated in the documentation for those Products.

VIII.B 2-year Conditional warranty

8.2. Products that are listed in this Product Guide as carrying a 2-year to a location in the United States or Canada shall carry a 2-year warranty. The 2-year warranty is conditional and the warranty coverage shall not apply to damage to Products caused by ordinary wear and tear, negligence or improper use by Client, or other causes beyond the control of the Seller. Product specific terms of warranty with regard to warranty period or conditions of warranty may apply to certain specified Products as stated in the documentation for those Products.

067001 - 04/13 - Subject to change. © Belimo Aircontrols (USA), Inc.

VIII.C General Warranty Terms

8.3. Seller's warranty may be null and void in the event of any: (a) modification or unauthorized repairs of Products by Client, (b) unauthorized incorporation or integration of Products into or with Client's equipment, (c) use of Products in an unauthorized manner, or (d) damage to Products not caused by Seller.

8.4. Client must promptly notify Seller of Products' alleged defect and provide Seller with other evidence and documentation reasonably requested by Seller. Before removing Products from service, Client should contact a Seller-authorized support technician by calling Belimo customer service. The contact information for Belimo customer service is listed on the back page of Belimo's Product Guide and Price List ("PGPL") or may be found at www.belimo.com. Belimo customer service will work with field technicians to troubleshoot problems. Many problems can be resolved over the phone.

8.5. If a problem cannot be resolved over the phone, an RMA number will be issued by Seller for return of the Products. Prior to returning any Products under a warranty, Client must obtain an RMA number from Seller, along with shipping instructions for the return. The RMA number must be clearly written on the outside of the box containing the returned Products. Only Products returned to the proper location and identified with an RMA number will be accepted by the Seller.

8.6. All returned Products should be packaged appropriately to prevent further damage. Seller reserves the right to refuse any returned material if improperly packaged or labeled (without an RMA number). Products returned without proper RMA documentation will void Seller's warranty.

8.7. Products found to be defective for which a warranty is applicable will either be replaced or repaired at the Seller's discretion. Seller is not responsible for charges that Client may incur as a result of the removal or replacement of Products.

8.8. Repaired or replacement Products are shipped from Seller via ground shipment. Other shipping methods are available at the sole expense of the Client.

8.9. Repaired, replaced or exchanged Products will carry a warranty for a period of time equal to the greater of: (i) the remainder of the original 5-year warranty or 2-year warranty that was applicable to the repaired, replaced or exchanged Products, or (ii) six months, effective from the date the repaired, exchanged or replaced Products are shipped by Seller (the "Replacement Warranty Period").

8.10. Advanced replacement Products for Products covered under warranty may be obtained from Seller after the Belimo customer service troubleshooting process has been completed. For industrial products (such as butterfly valves), a purchase order is required. The purchase order will be credited upon the receipt and verification by Seller of the returned defective Products. For non-industrial products, an invoice will be issued and shall be due and payable if the returned Products are not received by Seller within 60 days from the date of that the replacement Products are shipped. Additional charges may apply if the nature of the problem has been misrepresented by Client.

8.11. Both the conditional and unconditional warranties cover the Products only, and do NOT cover labor associated with the troubleshooting, removal or replacement of such Products.

8.12. New Products ordered in an attempt to circumvent the warranty process may NOT be reimbursed if, upon receipt of returned Products, it is determined that the defect in the returned Products is actually field related, or the Products have been returned for cosmetic reasons only.

8.13. Advanced replacement Products for butterfly valve actuators may not be new, but have been verified by the Seller for electrical and mechanical operation. Such Products carry the full warranty for the entire Replacement Warranty Period.

IX. No Warranty for Non-HVAC Application

9.1. All Seller warranties shall extend only to HVAC use of the Products. If Products are used in non-HVAC application (e.g., aircraft, industrial processes, etc.), Seller's warranties shall not cover such Products. Client will be solely responsible for any damage to or malfunction of Products or for any damage resulting from such use of Products.

X. Liability Disclaimer

10.1. These Terms constitute the entire understanding and agreement between Seller and Client regarding the warranties that cover Products and supersedes all previous understandings, agreements, communications and representations. Seller shall not be responsible for and Client does not have any right to make any claim for, damage that occurs to any property other than Products. Seller shall in no way be responsible for any costs incurred by Client in the determination of the causes of damage to any of Client's property, for expert opinions, or for any punitive or special, incidental or consequential damages of any kind whatsoever.

10.2. Seller shall not be liable for any damage resulting from or contributed by Client or third parties acting within the scope of responsibility of Client or such third party when:

1. Products are used for non-HVAC applications, such as in aircrafts, industrial processes, etc.;
2. Client uses the Products without complying with applicable law or institutional regulations or Belimo data and installation sheets or Client uses the Products without following good industry practice;
3. Products are used by personnel who have not received suitable instruction; or
4. Products are modified or repaired without the written approval of Seller.

When requested to do so, Client shall immediately release Seller in full from any possible third party claims resulting in connection with the circumstances listed above. This also applies to claims in connection with product liability.

10.3. If Client becomes aware that any third party has made or appears likely to make any claim regarding Products (including, without limitation, regarding Product defects or rights infringed by Products), then Client shall immediately inform Seller and afford to Seller all assistance that Seller may require to enforce its rights and defend such claim.

XI. Proper Law and Jurisdiction

11.1. All sales of Products under these Terms and the warranties described herein shall be governed by the laws of the State of Connecticut, and the parties agree to submit to the exclusive jurisdiction of the Federal and state courts located in the State of Connecticut with respect to any dispute arising from the subject matter hereof. The parties hereby waive all rights to a jury trial in connection with any claims relating to the subject matter hereof.

067001 - 04/13 - Subject to change. © Belimo Aircontrols (USA), Inc.

Valve Quotation Form

CONTACT NAME _____

COMPANY _____

ADDRESS _____

_____

PHONE _____

FAX _____

PROJECT NAME _____

Belimo Aircontrols (USA), Inc.

43 Old Ridgebury Road
Danbury, CT 06810

Phone (203) 791-9915
Fax (203) 791-9919

TOLL FREE
Phone (800) 543-9038
Fax (800) 228-8283
(800) ACTUATE

1049 Fortunato Loop
Sparks, NV 89436

Phone (775) 857-4243
Fax (775) 857-4255

TOLL FREE
Phone (800) 987-9042
Fax (800) 987-8875

	Project Specifications								Actuator Specifications												NOTES
Quantity	System	Flow (gpm)	Desired Pressure Drop (psi)	Desired C_V	Pipe Size (in.)	System Close-Off Pressure (psi)	Two-way	Three-way	PICCV	CCV	Globe	Butterfly	Zone	24 VAC	120 VAC	On-Off	Tri-State Floating Pt.	Modulating	Spring Return	Switches	

Custom MFT Configuration Order Form

FAX: (USA & Latin America and the Caribbean) 1-800-228-8283
(Canada) 1-866-805-7089

#1 Select an Actuator

(use one sheet for each unique actuator/configuration)

	Quantity		Quantity
❑ AFX24-MFT		❑ NMX24-MFT95	
❑ AFX24-MFT-S		❑ NMQX24-MFT	
❑ AFX24-MFT95		❑ LMX24-MFT	
❑ NFX24-MFT		❑ LMX24-MFTX1	
❑ NFX24-MFT-S		❑ LMX24-MFT95	
❑ LF24-MFT US		❑ LMQX24-MFT	
❑ LF24-MFT-S US		❑ AHKX24-MFT	
❑ TF24-MFT US		❑ AHX24-MFT	
❑ GKX24-MFT		❑ LHX24-MFT	
❑ GMX24-MFT		❑ LRX24-MFT	
❑ GMX24-MFTX1		❑ LUX24-MFT	
❑ GMX24-MFT95		❑ NV24-MFT US	
❑ AMX24-MFT		❑ NVF24-MFT US	
❑ AMX24-MFTX1		❑ NVF24-MFT-E US	
❑ AMX24-MFT95		❑ NVFD24-MFT US	
❑ AMQX24-MFT		❑ NVFD24-MFT-E US	
❑ NMX24-MFT		❑ LUX24-MFT	
❑ NMX24-MFTX1		(-S=Auxiliary Switch)	

Name _____

Company _____

Address _____

City _____ State _____ Zip _____

Phone _____ Fax _____

Email _____

#2 Create a Custom Configuration

1 Angle of rotation setting

☐ **Deactivated** (Default) — The following settings 2 - 5 refer to the full angle of rotation of 95°.

☐ **Activated** — The following settings 2 - 5 are automatically adapted to the effective mechanical angle of rotation.

- ☐ **Manual** triggering by pressing the push button twice.
- ☐ **Automatic** triggering each time the unit is powered up or by pressing the push button twice.

2 Control Types

VDC	PWM	Floating Point	On/Off
☐ 2 – 10	☐ 0.2 to 5.0 seconds	☐	☐
☐ 0 – 10	☐ 0.1 to 25.5 seconds		
☐ Variable	☐ 0.59 to 2.93 seconds		
Start ☐☐.☐	☐ Variable		
Stop ☐☐.☐	Start ☐☐.☐		
	Stop ☐☐.☐		

3 Feedback Signals U_5

☐ **Position Feedback U** DC 2...10 V (Default)

☐ **Position Feedback U** DC 0...10 V

☐ **Position Feedback U**
Start DC ☐.☐ V (0...8 V)
Finish DC ☐☐.☐ V (2...10 V)
The finish must be at least 2 V above the start!

4 Running Time

☐ 150 seconds (Default)

☐ Running time ☐☐☐ seconds (25...300 seconds) (in 5 second increments)

Note: The sound power level [dB(A)] increases when the running time is below 150 seconds.

❑ LM	35…150 seconds	❑ LHQ	3.5…15 seconds
❑ LMQ	2.5…10 seconds	❑ AH	75…150 seconds
❑ NM	45…170 seconds	❑ AHQ	7…30 seconds
❑ NMQ	4…15 seconds	❑ AHK	95…150 seconds
❑ AM	90…300 seconds	❑ TF	75…300 seconds
❑ AMQ	7…15 seconds	❑ LF	75…300 seconds
❑ GM	75…300 seconds	❑ NFX	40…220 seconds
❑ GK	95…150 seconds	❑ AFX	70…220 seconds
❑ LH	75…150 seconds		

5 Override control and electronic angle of rotation limiting

☐ Min. (min. position) = ☐☐☐ % (0...100%) ◁ (beginning of working range) default 0

ZS (intermediate position) = ☐☐☐ % (0...100%) (0% = Min.; 100% = Max.) default 50

Max. (max. position) = ☐☐☐ % (0...100%) ◁ (end of working range) default 100

067001 - 04/13 - Subject to change. © Belimo Aircontrols (USA), Inc.

Instructions for Completing this Form

Ball valves with-out a mounting flange are typically not designed for installing actuation, therefore the valve design may not support modulation outside of manual usage. Belimo does not recommend retrofitting these types of ball valves.

All dimensions should be taken with ALL original actuation and hardware components removed from the valve body.

An example using **Mounting Style 3:** Dimensions A & B (**Dim A and Dim B**) relate to the TOP mounting holes on the ball valve body. These holes are usually arranged on the body in a "X" pattern (**MOUNT STYLE 3**). This information is entered on the UBSP Series Ball Valve Retrofit Form in the **MOUNT STYLE** section. The length of the valve stem sticking out of the top of the valve body is recorded under **Dim D and E**. The TOP mounting holes are usually drilled through the top flange, but sometimes are threaded. Enter this information on the form next to the mount style information previously recorded.

MOUNT STYLE 3: Dimensions A & B (**Dim A and Dim B**) relate to the TOP mounting holes on the ball valve body. These holes are usually arranged on the body in a "X" pattern (**MOUNT STYLE 3**). This information is entered on the UBSP Series Ball Valve Retrofit Form in the **MOUNT STYLE** section. The length of the valve stem sticking out of the top of the valve body is recorded under **Dim D and E**. The TOP mounting holes are usually drilled through the top flange, but sometimes are threaded. Enter this information on the form next to the mount style information previously recorded.

STEM STYLE: Examine the valve being retrofitted to establish which stem style matches the diagrams above. Use caution when recording these dimensions. **Dim H** refers to the valve stem diameter and should be measured at several points up and down as well as around the stem itself. **Dim E** refers to the length of the drive surface available, whether it is a key or flatted surface. **Dim F** refers to the width of the drive surface or the distance across the flats. This is the most critical dimension for correct linkage operation. Please measure accordingly. Lastly please specify the desired actuator orientation in reference to the valve body using the ports as reference, i.e. over the "A" port ect. We have also includes an ISO-5211 standard dimension chart for reference. If the valve is labeled please specify its "F" number so that we may confirm the dimensions per the ISO spec.

In addition, we require information about the environment and process in which this linkage system will be utilized. As well as the frequency of use the current actuator runs. This will help to ensure the longevity of the new linkage and actuator. Having the prior actuator spec and model will help.

The form must be completed in its entirety to guarantee the complete, perfect fit of your retrofit system. Keep in mind that retrofit kits are designed with close-tolerance components which afford the most efficient linkage systems. Measurements rounded to the nearest 1/8 or 1/16 inch will not perform as well (sometimes not at all) as a kit designed around careful measurements using proper equipment. Our designs are typically +.005" tolerance.

Required Tools - calipers and retrofit form.

DISCLAIMER:

While we will do our best to provide a linkage system designed around your specifications and measurements, we cannot be held responsible for linkages which do not fit as a result of incorrect data supplied to Belimo. We will be happy to re-work components which do not fit properly for a nominal fee.

Actuation, weather shields and linkages cannot be pre-assembled at the Belimo factory. The linkages are designed to be attached onto the valve body first, then optional weather shields, and finally actuation products in the field.

Close-off pressures are calculated using actuator torque, valve stroke, and valve area. Other factors may affect the rated Close-off pressures, including flow rates, system maintenance schedules, chemicals used in the shot feeder process, vicinity to pumps, condition of valve stem seals, and assembly of linkage material in the field.

Valves that are being considered for retrofit of actuation should be analyzed for their life expectancy before the retrofit has taken place. Valves that leak through stem seals or casings will continue to leak with the new linkage system in place, maybe even more so. Rebuilding the packing on these valves may be more costly than replacing the valves themselves. In some cases, modifications may be necessary for proper operation of the linkage system. Belimo assumes NO responsibility for these modifications and are at the discretion of the user as to whether the modifications can be made.

NOTE: Although it is possible that the valve being retrofitted has a Close-off pressure rating considerably higher than the actual system pressure, actuation products have been selected to meet the full rating of the valve body. This will assure operation of the valve when considering long term exposure to pumping systems. Belimo does not manufacture or document retrofit packages utilizing actuation products designed around anything less than the full rating of the valve body.

067001 - 04/13 - Subject to change. © Belimo Aircontrols (USA), Inc.

MOUNT STYLE 1

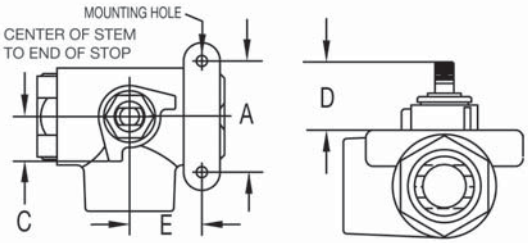

MOUNT STYLE 2

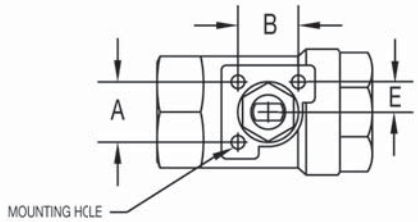

MOUNT STYLE 3

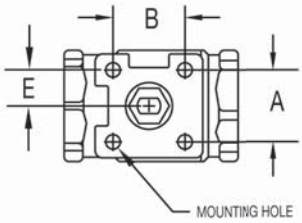

MOUNT STYLE 4

SKETCH YOUR MOUNT STYLE USING EXAMPLES ABOVE

MOUNT STYLE DIMENSIONS

MOUNT STYLE ☐

DIM A: ____

DIM B: ____

DIM C: ____

DIM D: ____

DIM E: ____

MOUNTING HOLES:

DRILLED

DIA Ø: ____

TAPPED

THREAD SPEC. ____

DIM. A & B MEASURED FROM CENTER OF HOLE

ISO STANDARD

ISO	BOLT SQUARE	BOLT SIZE Ø	CHECK ONE
F03	1.002	M5	
F04	1.169	M5	
F05	1.392	M6	
F07	1.949	M8	
F10	2.840	M10	
F12	3.480	M12	
F14	3.879	M16	
F16	4.593	M20	
F25	7.071	M16	

STEM STYLE 1

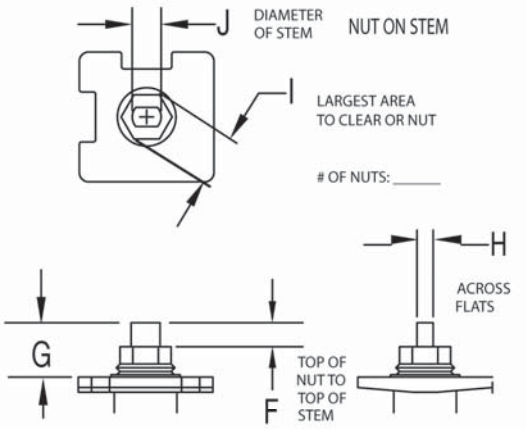

STEM STYLE 2

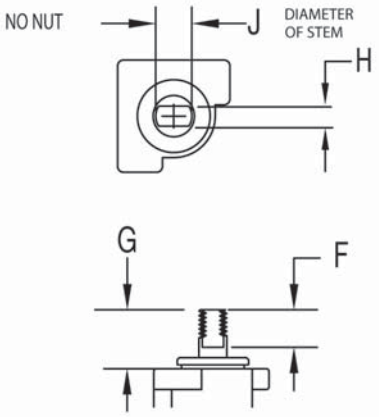

STEM STYLE 3

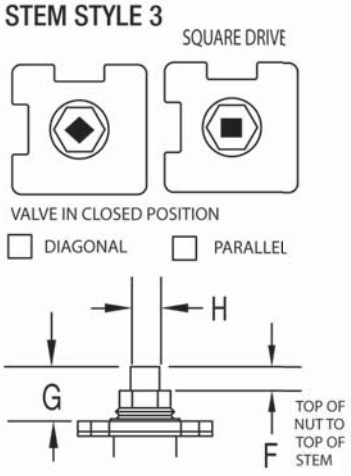

STEM STYLE ☐ DIM F: ____ DIM G: ____ DIM H: ____ DIM I: ____ DIM J: ____

ACTUATOR

EXISTING ACTUATOR MODEL: _____ CONTROL TYPE: ☐ ON/OFF ☐ FLOATING POINT ☐ VDC Range:____ ☐ PWM Range:____

FAIL SAFE: ☐ YES ☐ NO

FAIL POSITION: ☐ NO ☐ NC ☐ INDOOR ☐ OUTDOOR

FREQUENCY OF OPERATION (*specify how often*): DAILY____ WEEKLY____ MONTHLY____

VOLTAGE: ____

ACTUATOR ORIENTATION:



COMPANY: _____

JOB NAME: _____

PO#: _____

PHONE: _____

EMAIL: _____

VALVE MANUFACTURE: _____

VALVE SERIES: _____

VALVE MODEL: _____

VALVE TAG/LOCATION: _____

QUANTITY: _____

2 WAY/3 WAY: _____

VALVE SIZE: _____

MEDIA TEMP: _____

MEDIA TYPE: _____

SYSTEM PRESSURE: _____

NOTE: THIS INFORMATION WILL BE UTILIZED IN THE FABRICATION OF A CUSTOM LINKAGE SYSTEM FOR YOUR VALVE REQUIREMENT; THEREFORE, IT IS ESSENTIAL THAT THE ABOVE DIMENSIONS BE FURNISHED WITH READINGS TAKEN TO THE NEAREST .001".ANY ERRONEOUS DIMENSIONS FURNISHED WHICH RESULT IN IMPROPER FIT OF THIS LINKAGE SYSTEM ARE NOT THE RESPONSIBILITY OF BELIMO AIRCONTROLS. ANY REWORK REQUIRED WILL RESULT IN AN EXTRA CHARGE.

CUSTOM KITS ARE DESIGNED TO YOUR UNIQUE SPECIFICATIONS AND ARE NOT RETURNABLE.

COMPANY CONTACT/DIMENSIONS PROVIDED BY: _____ DATE: _____

067001 - 04/13 - Subject to change. © Belimo Aircontrols (USA), Inc.

Instructions for Completing this Form

Dimensions A, B & C relate to the existing valve stem. **Dim A** is the stem diameter where it is NOT threaded (Style A), or grooved (Style B). **Dim B** refers to the length of the threaded region on the valve stem or top region of the grooved stem. **Dim C** is the actual thread specification for the threaded style stem (1/4-28, 5/16-24, 3/8-24, 7/16-20 & 1/2-20 are typical). Dim C for the grooved style is the measurement of the stem groove height. This information is used to design a stem adapter which will connect the valve stem to the new linkage drive rack. It is important to specify the correct thread pattern, as incorrect data will prevent the stem adapter from attaching to your valve. If you cannot determine the correct thread spec, you can send a nut from the valve stem and we will match the correct specification. In some cases where older valves are concerned, some valve stems must be trimmed in the field to allow attachment of the linkage system. In these cases, a stem adapter is designed to "bite" into the smooth surface of the valve stem itself.

Dimensions D1, D2 & D3 are used to determine the height of the linkage assembly required to clear the valves' full stroke. A minimum of **two** dimensions are required to manufacture the correct linkage system for your valve. These dimensions also provide the information necessary to determine valve stroke. The **maximum stroke** from Belimo globe valve retrofit systems is 1.500".

Dimension E refers to the valve bonnet diameter (regardless if threads are present or not). Over time, impurities will react to the bonnet threads and corrode them to the point where they no longer meet the original thread specification. Because of this, we manufacture **slip fit** collars designed to **slide over** the bonnet threads, and locking setscrews are provided which "bite" into the original threads. All retrofit systems are designed to work with the raw valve body and do not account for previous actuation components which **must** be removed from the valve body before attaching the new linkage system.

Dimension F refers to the thread specification on threaded bonnets, and refers to the minor diameter on slip on bonnets (Landis type). This information helps us determine the length of the locking devices required to hold the collar onto the bonnet.

Dimensions G & H are used to determine working height of the bonnet region of your globe valve, while **Dim I** is used in calculating the minimum ID of the collar that will fit over the packing nut. Additionally, information about the environment and process in which this linkage system will be utilized should be provided.

All the requested information contained on this form is required to guarantee the complete, perfect fit of your retrofit system. Keep in mind that retrofit kits are designed with close-tolerance components which afford the most efficient linkage systems. Measurements rounded to the nearest 1/8 or 1/16 inch will not perform as well as a kit designed around careful measurements using proper equipment. Our designs are typically +.005" tolerance.

Required Tools - calipers, thread gauge and retrofit form

DISCLAIMER:

While we will do our best to provide a linkage system designed around your specifications and measurements, we cannot be held responsible for linkages which do not fit as a result of incorrect data given to Belimo. We will be happy to re-work components which do not fit properly for a nominal fee.

To reduce the possibility of incorrect linkage solutions, we respectfully request that you fill out the retrofit form completely and forward that information with your order. This will serve as a double check between your valve and the actuator/linkage package designed for your application.

Actuation, weather shields and linkages cannot be pre-assembled at the Belimo factory prior to your receipt. The linkages are designed to be attached onto the valve body first, then optional weather shields, and finally actuation products.

Close-off pressures are calculated using actuator torque, valve stroke, and valve area. Other factors may affect the rated close-off pressures, including flow rates, system maintenance schedules, chemicals used in the shot feeder process, vicinity to pumps, condition of valve stem seals, and assembly of linkage material in the field.

Valves that are being considered for retrofit of actuation should be analyzed for their life expectancy before the retrofit has taken place. Valves that leak through stem seals or casings will continue to leak with the new linkage system in place, maybe even more so. Rebuilding the packing on these valves may be more costly than replacing the valves themselves. In some instances, older valve stem heights will require field modifications to the valve in order to utilize the retrofit kit. Belimo takes no responsibility for the operation of these valves after they have been modified.

067001 - 04/13 - Subject to change. © Belimo Aircontrols (USA), Inc.

VALVE STYLE 1

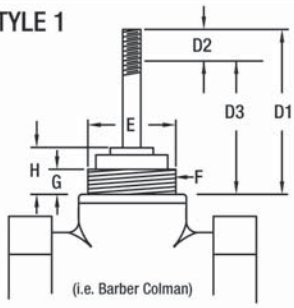

NOTE:
Nut "F" rotates on valve bonnet!!

VALVE STYLE 2

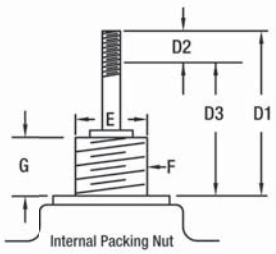

VALVE STYLE 3

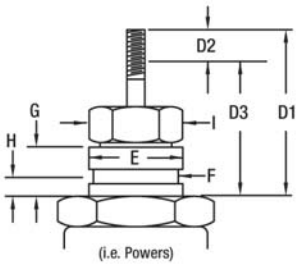

VALVE STYLE 4

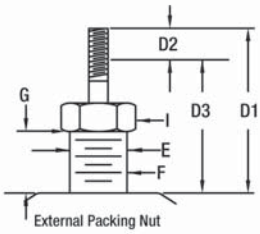

VALVE STYLE 5

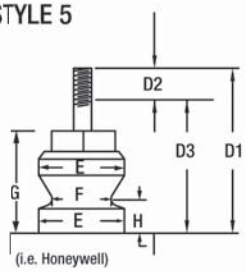

VALVE STYLE DIMENSIONS

VALVE STYLE:		
DIM D1*: Stem up, length to base mount surface		
DIM D2: Stem stroke, stem up vs. stem down (D1-D3)		max. 1.500"
DIM D3: Stem down, length to base mount surface		
DIM E: Bonnet major diameter		
DIM F: Thread spec or bonnet minor diameter		
DIM G: Bonnet mount height		
DIM H: Bonnet minor diameter height		
DIM I: External packaging nut, across points		

*MAXIMUM LENGTH LINKAGE FRAME WILL ACCOMODATE UP TO 6.500" D1 MEASUREMENT VALVE STEMS LONGER THAN THIS NEED TO BE CUT.

STEM STYLE A

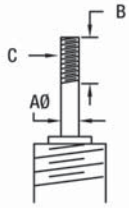

STEM STYLE B

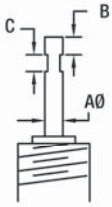

STEM STYLE A or B: ☐ | STEM DIAMETER DIM A: ☐ | THREAD LENGTH DIM B: ☐ | TO STEM GROOVE DIM B: ☐ | THREADS PER INCH DIM C: ☐ | STEM GROOVE HEIGHT DIM C: ☐

ACTUATOR

EXISTING ACTUATOR MODEL: _____ CONTROL TYPE: ☐ ON/OFF ☐ FLOATING POINT ☐ VDC Range:_____ ☐ PWM Range:_____

FAIL SAFE: ☐ YES ☐ NO

FAIL POSITION: ☐ NO ☐ NC ☐ INDOOR ☐ OUTDOOR

VOLTAGE _____

COMPANY: _____ VALVE MANUFACTURE: _____ 2 WAY/3 WAY: _____

JOB NAME: _____ VALVE SERIES: _____ VALVE SIZE: _____

PO#: _____ VALVE MODEL: _____ MEDIA TEMP: _____

PHONE: _____ VALVE TAG/LOCATION: _____ MEDIA TYPE: _____

EMAIL: _____ QUANTITY: _____ SYSTEM PRESSURE: _____

NOTE: THIS INFORMATION WILL BE UTILIZED IN THE FABRICATION OF A CUSTOM LINKAGE SYSTEM FOR YOUR VALVE REQUIREMENT; THEREFORE, IT IS ESSENTIAL THAT THE ABOVE DIMENSIONS BE FURNISHED WITH READINGS TAKEN TO THE NEAREST .001". ANY ERRONEOUS DIMENSIONS FURNISHED WHICH RESULT IN IMPROPER FIT OF THIS LINKAGE SYSTEM ARE NOT THE RESPONSIBILITY OF BELIMO AIRCONTROLS. ANY REWORK REQUIRED WILL RESULT IN AN EXTRA CHARGE.

CUSTOM KITS ARE DESIGNED TO YOUR UNIQUE SPECIFICATIONS AND ARE NOT RETURNABLE.

COMPANY CONTACT/DIMENSIONS PROVIDED BY: _____ DATE: _____

067001 - 04/13 - Subject to change. © Belimo Aircontrols (USA), Inc.

Instructions for Completing this Form

Please keep in mind that all dimensions should be taken with ALL original actuation and hardware components removed from the valve body.

MOUNT STYLE: Dimensions A & B **(Dim A and Dim B)** relate to the TOP mounting holes on the butterfly valve body. These holes are usually arranged on the body in either an "X" pattern (**MOUNT STYLE 1**), or a cross pattern (**MOUNT STYLE 2**). This information is entered on the UFSP Series Butterfly Valve Retrofit Form in the **MOUNT STYLE** section. The length of the valve stem sticking out of the top of the valve body is recorded under **Dim C**. The TOP mounting holes are usually drilled through the top flange, but sometimes are threaded. Enter this information on the form next to the mount style information previously recorded.

SHAFT STYLE: Examine the valve being retrofitted to establish which shaft style matches the diagrams. Use caution when recording these dimensions. **Dim D** refers to the valve stem diameter and should be measured at several points up and down as well as around the stem itself. **Dim E** refers to the length of the drive surface available, whether it be a key, flatted surface, or the distance a drive hole is from the top of the stem. There are two types of keys (Keyway-Shaft Style 4 and Woodruff Key-Shaft Style 5). Please select the key size as noted in the column "For Shaft Stlye 4 & 5". **Dim F** refers to the width of the drive surface. This is the most critical dimension for correct linkage operation. Please measure accordingly.

In addition, we require information about the environment and process in which this linkage system will be utilized.

The form must be completed in its entirety to guarantee the complete, perfect fit of your retrofit system. Keep in mind that retrofit kits are designed with close-tolerance components which afford the most efficient linkage systems. Measurements rounded to the nearest ⅛ or 1/16 inch will not perform as well (sometimes not at all) as a kit designed around careful measurements using proper equipment. Our designs are typically +.005" tolerance.

Required Tools - calipers and retrofit form.

DISCLAIMER

While we will do our best to provide a linkage system designed around your specifications and measurements, we cannot be held responsible for linkages which do not fit as a result of incorrect data supplied to Belimo. We will be happy to re-work components which do not fit properly for a nominal fee.

Actuation, weather shields and linkages cannot be pre-assembled at the Belimo factory. The linkages are designed to be attached onto the valve body first, then optional weather shields, and finally actuation products in the field.

Close-off pressures are calculated using actuator torque, valve stroke, and valve area. Other factors may affect the rated Close-off pressures, including flow rates, system maintenance schedules, chemicals used in the shot feeder process, vicinity to pumps, condition of valve stem seals, and assembly of linkage material in the field.

Valves that are being considered for retrofit of actuation should be analyzed for their life expectancy before the retrofit has taken place. Valves that leak through stem seals or casings will continue to leak with the new linkage system in place, maybe even more so. Rebuilding the packing on these valves may be more costly than replacing the valves themselves. In some cases, modifications may be necessary for proper operation of the linkage system. Belimo assumes NO responsibility for these modifications and are at the discretion of the user as to whether the modifications can be made.

NOTE: Although it is possible that the valve being retrofitted has a Close-off pressure rating considerably higher than the actual system pressure, actuation products have been selected to meet the full rating of the valve body. This will assure operation of the valve when considering long term exposure to pumping systems. Belimo does not manufacture or document retrofit packages utilizing actuation products designed around anything less than the full rating of the valve body.

067001 - 04/13 - Subject to change. © Belimo Aircontrols (USA), Inc.

MOUNT STYLE 1

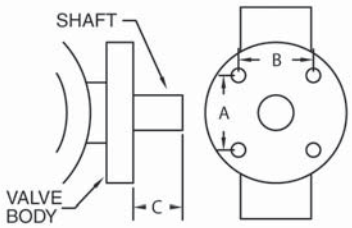

MOUNT STYLE 2

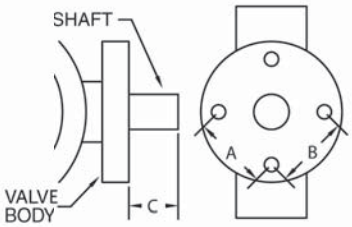

MOUNT STYLE DIMENSIONS

MOUNT STYLE ☐

DIM A: ____

DIM B: ____

DIM C: ____

DIM. A & B MEASURED FROM CENTER OF HOLE

MOUNT STYLE 3

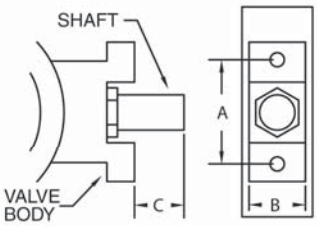

MOUNT STYLE 4

SKETCH YOUR MOUNT STYLE USING MOUNT STYLE EXAMPLES.

MOUNTING HOLES:

DRILLED

DIA Ø: ____

TAPPED

THREAD ____

SPEC. ____

SHAFT STYLE 4

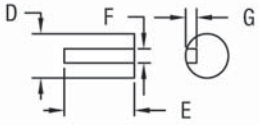

KEYWAY

KEY SIZE

.125"	☐
.1875"	☐
.250"	☐
.3125"	☐
.375"	☐
.4375"	☐
.500"	☐

CHECK ONE

SHAFT STYLE 5

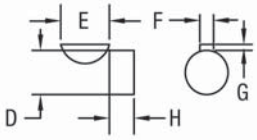

WOODRUFF KEY

SHAFT STYLE 6

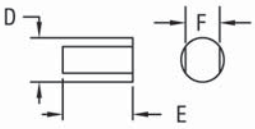

DOUBLE D

SHAFT STYLE 7



HEX

SHAFT STYLE 8

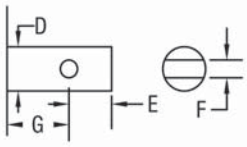

PINNED

SHAFT STYLE 9

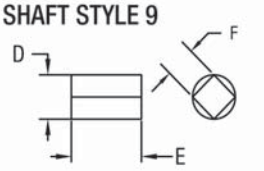

SQUARE

SHAFT STYLE 9

VALVE CLOSED

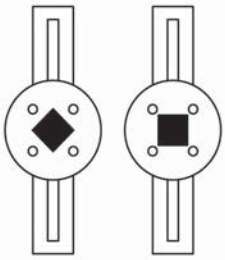

☐ ☐

CHECK ONE

SHAFT STYLE ☐ DIM D: ____ DIM E: ____ DIM F: ____ DIM G: ____ DIM H: ____

ACTUATOR

EXISTING ACTUATOR MODEL: ____ CONTROL TYPE: ☐ ON/OFF ☐ FLOATING POINT ☐ VDC Range:____ ☐ PWM Range:____

FAIL SAFE: ☐ YES ☐ NO

FAIL POSITION: ☐ NO ☐ NC ☐ INDOOR ☐ OUTDOOR

VOLTAGE____

COMPANY: ____ VALVE MANUFACTURE: ____ 2 WAY/3 WAY: ____

JOB NAME: ____ VALVE SERIES: ____ VALVE SIZE: ____

PO#: ____ VALVE MODEL: ____ MEDIA TEMP: ____

PHONE: ____ VALVE TAG/LOCATION: ____ MEDIA TYPE: ____

EMAIL: ____ QUANTITY: ____ SYSTEM PRESSURE: ____

NOTE: THIS INFORMATION WILL BE UTILIZED IN THE FABRICATION OF A CUSTOM LINKAGE SYSTEM FOR YOUR VALVE REQUIREMENT; THEREFORE, IT IS ESSENTIAL THAT THE ABOVE DIMENSIONS BE FURNISHED WITH READINGS TAKEN TO THE NEAREST .001". ANY ERRONEOUS DIMENSIONS FURNISHED WHICH RESULT IN IMPROPER FIT OF THIS LINKAGE SYSTEM ARE NOT THE RESPONSIBILITY OF BELIMO AIRCONTROLS. ANY REWORK REQUIFED WILL RESULT IN AN EXTRA CHARGE.

CUSTOM KITS ARE DESIGNED TO YOUR UNIQUE SPECIFICATIONS AND ARE NOT RETURNABLE.

COMPANY CONTACT/DIMENSIONS PROVIDED BY: ____ DATE: ____

067001 - 04/13 - Subject to change. © Belimo Aircontrols (USA), Inc.

BELIMO

Section 230900 – INSTRUMENTATION AND CONTROL FOR HVAC

PART 1 – GENERAL

The following addition should be made to 1.2.B.

1.2 SUMMARY

B. Related Sections include the following:

3. Division 23 Section "Hydronic Piping" for requirements for piping packages for control valves.

The following replaces the noted specification sections, except as noted.

2.15 ACTUATORS

A. Electronic Actuators:

1. Manufactured, brand labeled or distributed by BELIMO.
2. Size for torque required for damper seal at load conditions.
3. Coupling: V-bolt dual nut clamp with a V-shaped, toothed cradle.
4. Mounting: Actuators shall be capable of being mechanically ... electrically paralleled to incre...
5. Overload pr...
6. Fa...

Choose 22...
(above).

8. Proportional Actuators shall be fully prog... EEPROM without the use of actuator mounted switches
9. Temperature Rating: -22 to +122ºF -30 to +50ºC [**-58 to +122ºF** -50 to +50ºC]
10. Housing: Minimum requirement NEMA type 2 (4/4X) / IP54 (IP67) mounted in any orientation. .
11. Agency Listings: ISO 9001, cULus, CE or CSA
12. The manufacturer shall warrant all components for a period of 5 years from the date of production, with the first two years unconditional.

B. Industrial Actuators *(ONLY TO BE USED WITH 2.16.I Butterfly Valves – Resilient Seat and 2.16.J Butterfly Valves – High Performance.)*

1. Manufactured, brand labeled or distributed by BELIMO.
2. The combination of valve and actuator shall meet the close-off requirements as specified in Section 2.16.H – Butterfly Valves.
3. Coupling: ISO 5211 mounting standards.
4. Overload Protection: A self resetting thermal switch embedded in the motor.
5. Manual Override: Actuator shall be equipped with a hand wheel or shaft for manual override to permit operation of the actuator in the event of an electrical power failure
6. Power Requirements: 24VAC [120VAC] [230VAC] 1 pH.
7. Auxiliary Switches: 2 SPDT rated 3A at 250 VAC.
8. Temperature Rating: -22 to +150ºF. -30 to +65ºC.
9. Housing: Minimum requirement NEMA type 4X/ IP67 with an industrial quality coating. Actuator shall have an internal heater to prevent condensation within the housing. A visual indication beacon shall indicate position status of the device.
10. Agency Listing: ISO, CE, CSA
11. The manufacturer shall warrant for 2 years from the date of production.

2.16 CONTROL VALVES

A. Manufacturer:

1. Manufactured, brand labeled or distributed by BELIMO.

B. Control Valve Actuators:

1. Size for valve close off at 100 percent of total system (head) pressure for two-way valves and three-way diverting valves; and 100 percent of total system (pump) head differential pressure for three-way mixing valves. **[Combination of actuator and trim shall provide minimum close-off pressure rating of [100 psid] [200 psid] <Insert Close-Off Rating>.]**

Choose optional close-off pressure rating statement for higher (greater than 100psid) requirements.

2. Coupling: directly couple and mount to valve stem, shaft ISO-style direct-coupled mounting pad.
3. Shall meet all the requirements of 2.15.A. Electronic Actuators.

Specifier must include section 2.15.A Electronic Actuators when using this section.

C. Control Valves:

...ted of type, body material, and pressure class ... temperature rating of piping

...l of

...let

...let steam pressure, the ... shall be 80% of inlet gauge pressure. Higher than 15 PSIG inlet steam pressure the pressure drop shall be 42% of the inlet absolute pressure.]

Choose this option when specifying steam valves.

3. The control valve assembly shall be provided and delivered from a single manufacturer as a complete assembly.

D. The manufacturer shall warrant all components for a period of 5 years from the date of production, with the first two years unconditional (except as noted).

E. Pressure Independent Control Valves

1. NPS 2 and Smaller: Forged brass body rated at no less than 400 PSI, chrome plated brass ball and stem, female NPT union ends, dual EPDM lubricated O-rings and a brass or TEFZEL characterizing disc.
2. NPS 2-1/2 through 6: GG25 cast iron body according to ANSI Class 125, standard class B, stainless steel ball and blowout proof stem, flange to match ANSI 125 with a dual EPDM O-ring packing design, PTFE seats, and a stainless steel flow characterizing disc.
3. Accuracy: The control valves shall accurately control the flow from 0 to 100% full rated flow with an operating pressure differential range of 5 to 50 PSI differential across the valve with a valve body accuracy of +/- 5% variance due to differential pressure fluctuation or +/- 10% total assembly error incorporating differential pressure fluctuation, .manufacturing tolerances and valve hysteresis
4. Flow Characteristics: Equal percentage characteristics.

Remember to modify 2.15.A.6 to incorporate electronic fail-safe option for 2-1/2" through 6" Pressure Independent Valves, where fail safe applications are required.

Consultants and Specifiers
Get the Latest Actuator and Valve Specifications
Visit www.Belimo.us
or Call Your Local Representative

Belimo Americas Platinum Distributors

USA

ACR Supply Company Inc.
4040 S. Alston Avenue
Durham, NC 27713
Phone: 919-765-8081
With branches in NC

Aireco Supply
9120 Washington Boulevard
Savage, MD 20763-0414
Phone: 301-953-8800
With branches in MD, VA

Amcon Controls, Inc.
11906 Warfield Street
San Antonio,TX 78216
Phone: 210-349-6161
Houston, TX branch 713-464-7002
Mandeville, LA branch 985-624-3303

Wilson Mohr (was Applied Automation)
3186 South Washington Street, #230
Salt Lake City, UT 84115
Phone: 801-486-6454
With branches in CO, TX

Boston Aircontrols, Inc.
8 Blanchard Road
Burlington, MA 01803
Phone: 781-272-5800

Charles D. Jones Co.
445 Bryant Street, Unit #1
Denver, CO 80204-4800
Phone: 800-777-0910
With branches in CO, MO, KS

Cochrane Supply and Engineering, Inc.
30303 Stephenson Highway
Madison Heights, MI 48071-1633
Phone: 800-482-4894
With branches in MI and Maumee, OH

Columbus Temperature Control
1053 E. 5th Avenue
Columbus, OH 43201
Phone: 800-837-1837

Controlco
985 3rd Street
Oakland, CA 94607
Phone: 510-636-7900
With branches in CA, NV

Control Products
9101 Jameel, Suite 130
Houston, TX 77447
Phone: 713-849-7200

Edward C. Smyers & Co.
223 Fort Pitt Boulevard
Pittsburgh, PA 15222-1505
Phone: 412-471-3222

Engineered Control Systems
5627 NW 74th Avenue
Miami, FL 33166
Phone: 305-885-8804
With branches in FL

G & O Thermal Supply
5435 N. Northwest Highway
Chicago, IL 60630
Phone: 773-763-1300
With branches in IL

Industrial Controls Distributors, LLC
(was Climatic Control)
5061 W. State Street
Milwaukee, WI 53208
Phone: 800-242-1656
With branches in WI

Industrial Controls Distributors LLC
17 Christopher Way
Eatontown, NJ 07724
Phone:800-543-8200
With branches in
GA, KY, IN, MA, ME, NC, NY, OH, PA, TN

Interstate HVAC Controls
30 Vineland Street
Brighton, MA 02135
Phone: 617-782-9000

Jackson Controls
1708 E. 10th Street
Indianapolis, IN 46201
Phone: 317-231-2200

M & M Controls
9E West Aylesbury Road
Timonium, MD 21093
Phone: 410-252-1221
With a branch in Alexandria, VA

MICONTROLS, Inc.
6516 5th Place South
Seattle, WA 98124
Phone: 800-877-8026
With branches in WA, OR

Meier Supply
123 Brown Street
Johnson City, NY 13790
Phone: 607-797-7700
With branches in NY, PA

Minvalco, Inc.
3340 Gorham Avenue
Minneapolis, MN 55426-4267
Phone: 952-920-0131
With branches in MN

RSD / Refrigeration Supplies Distributor
26021 Atlantic Ocean Drive
Lake Forest, CA 92630
Phone: 949-380-7878
With branches in
CA, NV, OR, AK, AZ, ID, UT, WA, MT

Saint Louis Boiler Supply, Co.
617 Hanley Industrial Court
St. Louis, MO 63144
Phone: 314-962-9242

South Side Control Supply, Co.
488 N. Milwaukee Avenue
Chicago, IL 60610-3923
Phone: 312-226-4900
With branches in IL, IN

Stromquist and Company
4620 Atlanta Road
Smyrna, GA 30080
Phone: 404-794-3440
With a branch in Orlando, FL

Temperature Control Systems
10315 Brockwood Road
Dallas, TX 75238
Phone: 214-343-1444
With branches in OK, TX

Tower Equipment Co., Inc.
1320 West Broad Street
Stratford, CT 06615
Phone: 800-346-4647

Twinco Supply Corporation
55 Craven Street
Huntington Station, NY 11746-2143
Phone: 800-794-3188
With branches in NY

Wilson-Mohr, Inc.
12610 West Airport Blvd, Suite 100
Sugarland, TX 77478
Phone: 281-295-8850

CANADA

For a complete list of distributors in Canada, please visit our website: *www.belimo.ca* or call toll free: 866-805-7089

BRAZIL

For a complete list of distributors in Brazil, please visit our website: *www.belimo.com.br* or call: 55 11 3643-5656

LATIN AMERICA & THE CARIBBEAN

For a complete list of distributors in Latin America and the Caribbean, please visit our website: *www.belimo.us* or call: 203-791-8396

067001- 04/13 - Subject to change. © Belimo Aircontrols (USA), Inc.

BELIMO®

ORANGE is the color of reliable performance. And nothing could be GREENER than that.



Each year owners invest millions of dollars in high efficiency heating and cooling equipment all for the sake of being green. All too often these investments fall short of expectations. With product innovations like the Energy Valve, ePIV and PICCV owners make the most of those investments with technology that has proven itself over and over again.



The Massachusetts Institute of Technology (MIT), Massachusetts

"One thing that impressed us was having such intelligence right on the valve actuator," said Peter Cooper, Manager of Sustainable Engineering and Utility Planning at MIT.



The Phoenix Companies, Inc. Hartford, Connecticut

"The feedback is phenomenal. We simply plug a laptop into the valve actuator and we can see what our control system is calling for and watch the valve correct the signal for the correct amount of flow," said Robert Marquis, HVAC Project Manager at the Phoenix building.



Department of Transportation (DOT), headquarters in Washington D.C.

"The PICCV is a must-have for complex variable primary systems like this. Accuracy, efficiency, and low maintenance were critical for this large facility." remarked the US Government Accounts Manager for Belimo.



Eglin Air Force Base, Florida

"You can do variable flow with standard 2-way valves, but it is tricky. With Belimo PICCV valves, you just need to maintain a minimum 5 psi drop across the valve and it automatically maintains proper flow to your circuits," said Spencer O'Quinn, Project Manager for the Federal Business Unit of Chevron.

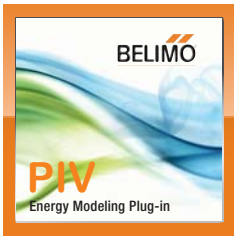

Real world answers to the questions that building owners have.

The PIV Plug-in was developed for use with two of the most popular building energy simulation tools on the market, **Trane Trace™ 700** and **DOE eQuest** to answer these important questions:

- What is the payback for using Pressure Independent Characterized Control Valves in a given building?
- How can I quantify the benefits of Pressure Independent technology so I can justify the cost to an owner?
- How many LEED points can I get for using PI control valves?

Free PIV Energy Modeling Plug-in, installs in seconds, available at www.belimo.us.

Belimo worldwide: www.belimo.com

BELIMO Americas
USA Locations, 43 Old Ridgebury Road, Danbury, CT 06810
Tel. 800-543-9038, Fax 800-228-8283, marketing@us.belimo.com

1049 Fortunato Loop, Sparks, NV 89436
Tel. 800-987-9042, Fax 800-987-8875, marketing@us.belimo.com

Canada Locations, 5845 Kennedy Road, Mississauga, Ontario L4Z 2G3
Tel. 866-805-7089, Fax 905-712-3124, marketing@us.belimo.com

Latin America and the Caribbean Customer Service
Tel. 203-791-8396, Fax 203-791-9139, marketing@us.belimo.com

Belimo Brasil Comércio de Automação Ltda.
Tel: 55 11 3643-5656, Fax: 55 11 3643 5657, atendimentoaocliente@br.belimo.com.

BELIMO®

067001- 04/13 - Subject to change. © Belimo Aircontrols (USA), Inc.